1

Items to Assemble
1 Long Leg Assembly
1 Short Leg Assembly
8 Screws

A Place bottom shelf on table or grill container.
B Insert tabs on long leg assembly into bottom shelf.
C Attach leg assembly with one screw on each side.
D Repeat step B and C for short leg assembly.

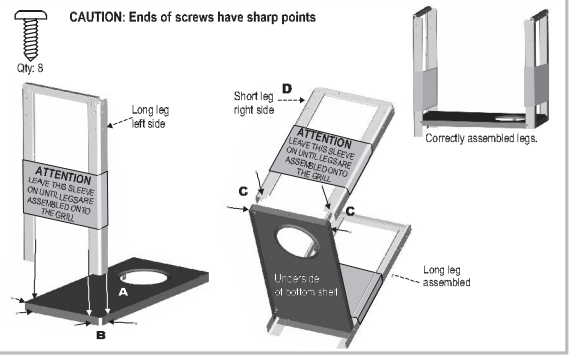

2

Items to Assemble
2 Leg Extenders
1 U-Nut
1 Cylinder Thumbscrew
2 Wheels
1 Axle Rod
1 Flanged Hex Nut
2 Flat Washers
1 Hitch Pin

A Attach leg extenders. Check to make sure leg is seated all the way into the leg extender.
B Attach u-nut to tab. See enlargement of u-nut for correct position.
C Thread cylinder thumbscrew into hole and u-nut. Screw flanged hex nut onto end of cylinder thumbscrew.
D Slide wheel on axle rod. Insert axle rod/wheel into large hole in bottom shelf. Attach other wheel with two washers and a hitch pin.

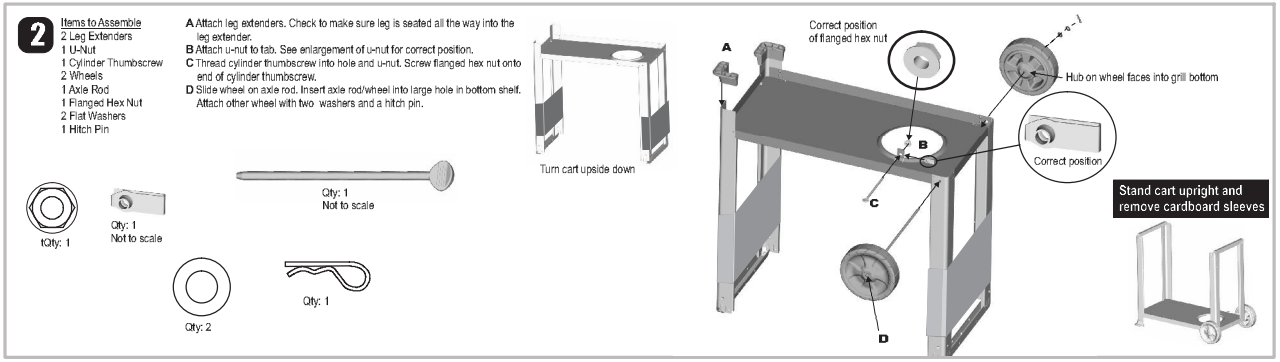

3

Items to Assemble
4 Rails (all identical)
10 Screws

A Overlap rails and hook tabs into slots. Pull rails to latch.
B Attach one screw in center of each rail.
C Attach rail and legs with two screws in each corner.

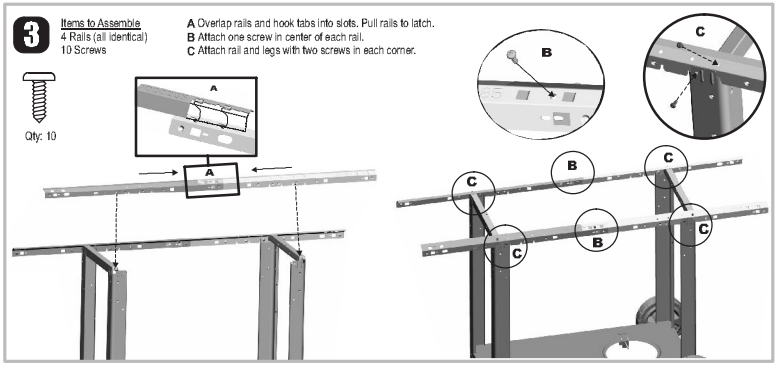

4

Items to Assemble
1 Front Panel
2 Push Pins

A Place tabs on front panel beside leg tabs.
B Insert push pins into front panel and legs.

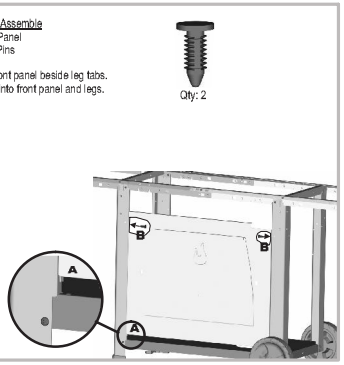

5

Items to Assemble
1 Grill Bottom Assembly
4 Screws

A Angle grill bottom assembly around and under the rails.
CAUTION: Be careful not to dislodge burner tubes.
B Make sure ribs on each side of bottom casting are nestled into notches on casting seat.
C Attach four screws inside grill bottom and into casting seat.

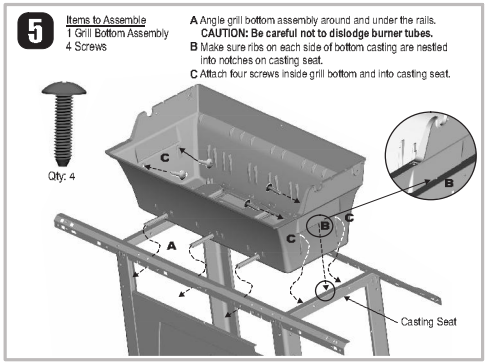

6

Items to Assemble
1 Electrode w/Wing Nut or Nut

A Inside bottom casting insert electrode and finger tighten with wing nut or nut.

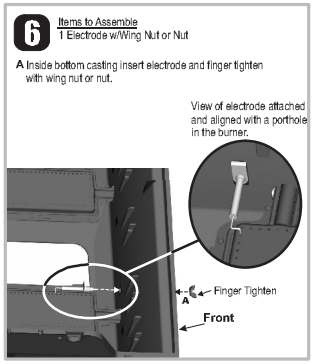

Parts List - Model 466364006

Key	Qty.	Description	Part #
A	1	Bottom Shelf	7000478
B	4	Rails	7000286
C	1	Top Casting	7000483
D	1	Bottom Casting	7000844
E	3	Burners	7000083
F	1	Carry-Over Tube	7000278
G	1	Handle	7000199
H	2	Pal Nuts	7000132
I	2	Wheels	7000262
J	1	Axle Rod	7001149
K	3	Vaporizer Tents	7000381
L	1	Grease Tray Assembly	7000042
M	1	Grease Pan Assembly	7000046
N	1	Fascia, Right	7000943
O	1	Fascia, Left	7000851
P	2	Leg Extenders	7000230
Q	4	Control Knobs	7000237
R	1	Ignition Module	7000944
S	1	Electrode	7000378
T	1	Ignition Button	7000161
U	3	"U" Nuts	7000185
V	1	24" Ignitor Wire	7000894
W	1	Sideburner Body	7000488
X	2	Washer Head Hex Nuts	7000271
Y	1	Sideburner Handle	7000059
Z	1	Sideburner Grid	4156376

Key	Qty.	Description	Part #
AA	1	Sideburner Burner	7000036
BB	1	"S" Hooks (set)	7000346
CC	1	Leg Assembly, Short	7001572
DD	1	Shelf	7000891
EE	1	Front Panel	7000489
FF	1	Warming Rack	7000180
GG	3	Cook Grid, 8"x15"	7000025
HH	1	Leg Assembly, Long	7001571
II	1	Valve/Hose/Regulator Assy	7000065
JJ	1	Control Panel	7000854
KK	1	Logo Plate	4157144
LL	1	Temperature Gauge Bezel	4157169
MM	1	Temperature Gauge	7000361
NN	2	Casting Bumpers	7000184
- -	1	Hardware Bag	7001577

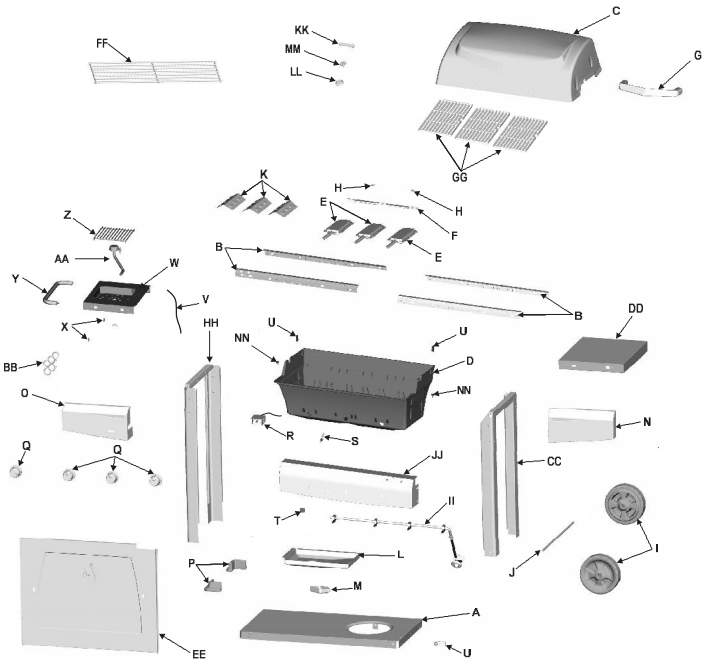

THERMOS®

PERFORMANCE SERIES™

ASSEMBLY MANUAL
466364006

THIS GRILL IS FOR OUTDOOR USE ONLY

CAUTION: Read and follow all safety statements, assembly instructions and use and care directions before attempting to assemble and cook.

INSTALLER/ASSEMBLER: Leave these instructions with consumer.

CONSUMER: Keep this manual for future reference.

⚠ WARNING
Failure to follow all manufacturer's instructions could result in serious personal injury and/or property damage.

⚠ CAUTION
Some parts may contain sharp edges - especially as noted in the manual. Wear protective gloves if necessary.

If you have any questions or need assistance during assembly, please call **1-800-387-6057**.

Visit us on the web at: **www.charbroil.com**

PRECISION GRILLING TECHNOLOGY

©2005 W. C. Bradley Co., All Rights Reserved

Printed in USA

7001574_466364006 (12-19-05) - 0