www.zenithappliances.com

Room Air Conditioner

SERVICE MANUAL

MODELS: ZW5000

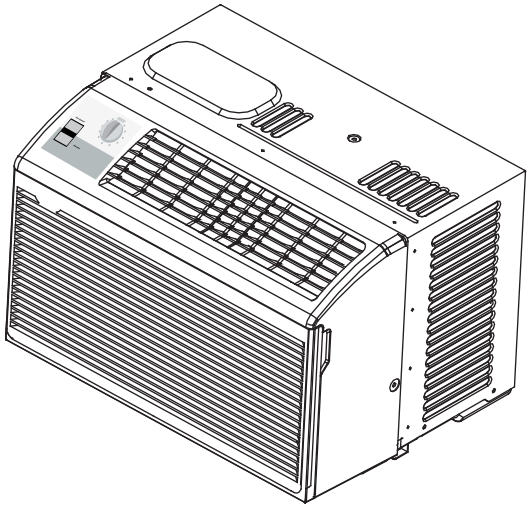

CAUTION

- **BEFORE SERVICING THE UNIT, READ THE SAFETY PRECAUTIONS IN THIS MANUAL.**
- **ONLY FOR AUTHORIZED SERVICE PERSONNEL.**

TABLE OF CONTENTS

Safety Precautions 3

Dimensions 7

Outside Dimensions 7

Product Specifications 8

Installation 9

Select the Best Location 9

How to Install 9

Installation Kits Content(Some Models) 10

How to Secure the Drain Pipe 11

Operation 12

Features 12

Insulation Resistance Test 12

About the Controls on the Air conditioner 12

Disassembly 13

Mechanical Parts 13

Air Handling Parts 14

Electrical Parts 15

Refrigerating Cycle 16

Schematic Diagram 19

Wiring Diagram 19

Troubleshooting Guide 20

Piping System 20

Troubleshooting Guide 21

Room Air Conditioner Voltage Limits 23

Exploded View 26

Replacement Parts List 27

Safety Precautions

To prevent injury to the user or other people and property damage, the following instructions must be followed.

■ Incorrect operation due to ignoring instruction will cause harm or damage. The seriousness is classified by the following indications.

⚠**WARNING**	This symbol indicates the possibility of death or serious injury.
⚠**CAUTION**	This symbol indicates the possibility of injury or damage to property only.

■ Meanings of symbols used in this manual are as shown below.

⃠	**Be sure not to do.**
❗	**Be sure to follow the instruction.**

⚠WARNING

■ Installation

Always install the expansion panel(s).

- Improper assembly or installation may cause incorrect operation, including injury, fire, and electric shock hazards.

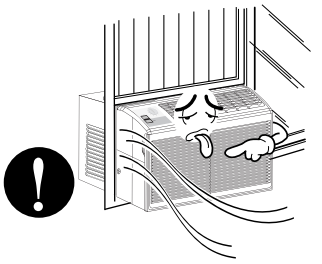

Do not place the power cord near a heater.

- It may cause fire and electric shock.

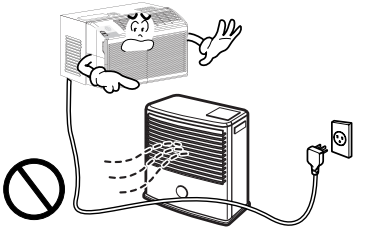

Do not use the power cord near flammable gas or combustibles such as gasoline, benzene, thinner, etc.

- It may cause explosion or fire.

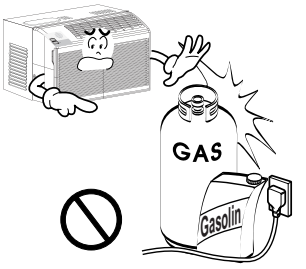

Do not disassemble or modify products.

- It may cause electric shock and failure.

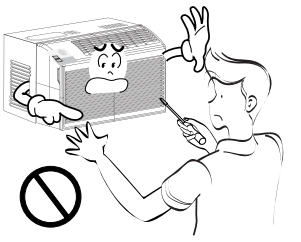

■ Operation

Plug in the power plug properly.

- Otherwise, it will cause electric shock or fire.

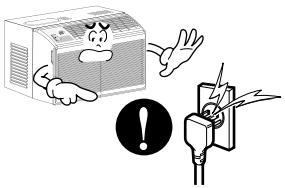

Do not operate or stop the unit by inserting or pulling out the power plug.

- It will cause electric shock or fire.

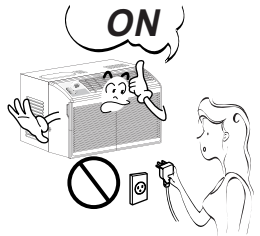

Do not damage or use an unspecified power cord.

- It will cause electric shock or fire.

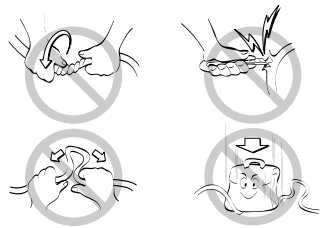

Do not modify power cord length.

- It will cause electric shock or fire.

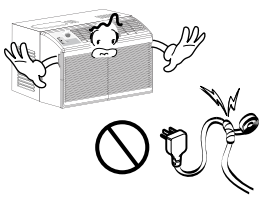

Use the air conditioner on a single outlet circuit. (See page 7.) Do not share the outlet with other appliances.

- It will cause electric shock or fire.

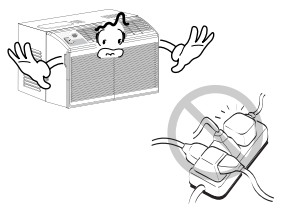

Always plug into a grounded outlet.

- No grounding may cause electric shock.

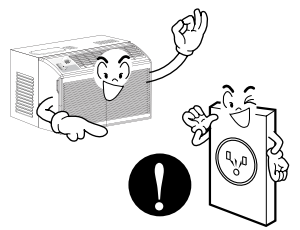

Unplug the unit if strange sounds, odors, or smoke come from it.

- Otherwise it will cause fire and electric shock accident.

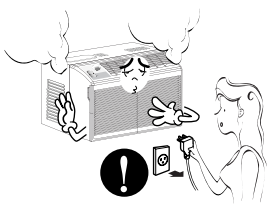

Do not use the socket if it is loose or damaged.

- It may cause fire and electric shock.

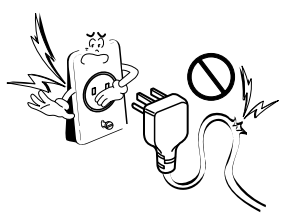

Do not operate with wet hands or in damp environment.

- It may cause electric shock.

Close all doors, windows and other outside openings to the room.

- The air conditioner must be operated in a enclosed area to be most effective.

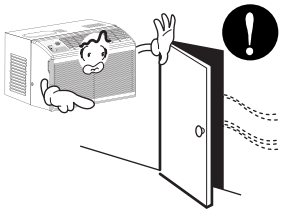

Ventilate before operating air conditioner when gas goes out.

- It may cause explosion, fire,and burn.

If water enters the product, turn off the power switch of the main body of appliance. Contact service center after taking the power plug out from the socket.

- It will cause electric shock or failure of machine.

Do not clean the air conditioner with water.

- Water may enter the unit and degrage the insulation.It may cause an electric shock.

⚠CAUTION

■ Installation

Never touch the metal parts of the unit when removing the filter.

- They are sharp and may cause injury.

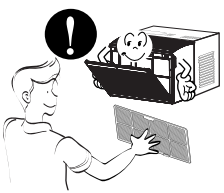

Do not block the inlet or outlet.

- It may cause failure of appliance or performance deteriorate.

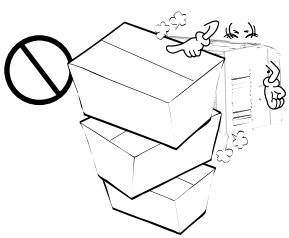

Ensure that the outer case is not damaged by age or wear.

- If the outer case is damaged, it must be repaired or replaced immediately. Leaving it damaged could result in the air conditioner falling out of the window, creating a safety hazard.

■ Operation

Be cautious not to touch the sharp edges when installing.

- It may cause injury.

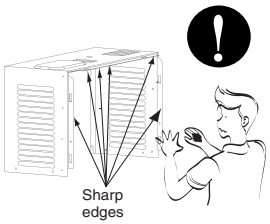

Hold the plug by the head when taking it out.

- It may cause electric shock and damage.

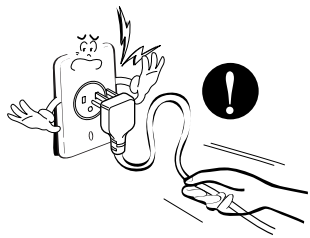

Unplug the air conditioner if it will not be used for a long period.

- It will waste power consumption in vain and it may cause accident.

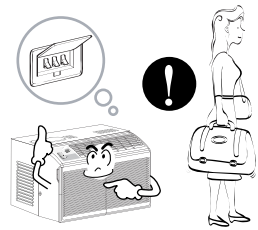

Unplug the air conditioner before cleaning it.

- Since the fan rotates at high speed during operation, it may cause injury.

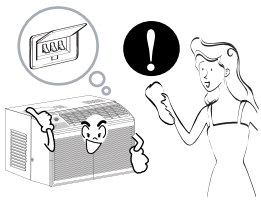

Do not put a pet or house plant where it will be exposed to direct air flow.

- This could injury the pet or plant.

Do not use this appliance for special purposes such as pets, foods, precision machinery, or objects of art.

- It is an air conditioner, not a precision refrigeration system.

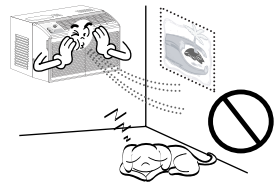

Always insert the filter securely.
Clean it every two weeks.

- Operation without filters **will** cause failure.

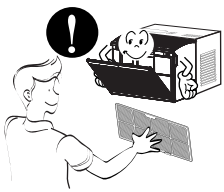

Use a soft cloth to clean. Do not use wax, thinner, or a strong detergent.

- The appearance of the air conditioner may deteriorate, change color, or develop surface flaws.

Do not drink water drained from air conditioner. Do not direct airflow at room occupants only.

- It is not sanitary and could cause illness or personal injury hazard.

Dimensions

Symbols Used in this Manual

This symbol alerts you to the risk of electric shock.

This symbol alerts you to hazards that could cause harm to the air conditioner.

NOTICE **This symbol indicates special notes.**

Outside Dimensions

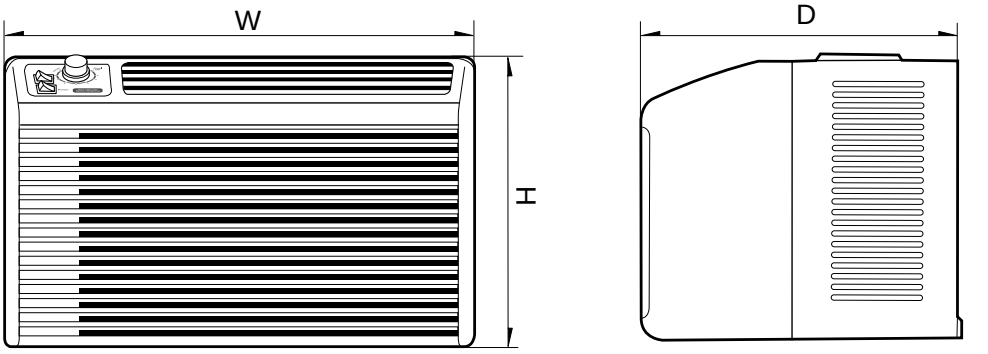

Dimension \ Model		All Model
W	mm(inch)	439(17 5/16")
H	mm(inch)	283(11 1/8")
D	mm(inch)	326(12 13/16")

Product Specifications

MODELS / ITEMS	GWHD5000
COOLING CAPACITY (BTU/h)	5,000
POWER SUPPLY (Phase, V, Hz)	1ø, 115V, 60HZ
INPUT (W)	515
OPERATING CURRENT (AMP.)	4.8
REFRIGERANT CONTROL	CAPILLARY TUBE
REFRIGERANT CHARGE (R-22)	200g (7.0 Oz)
INSIDE FAN	TURBO
OUTSIDE FAN	ROPELLER FAN WITH SLINGER RING
AIR DISCHARGE	2-WAY (RIGHT AND LEFT)
CHASSIS	TOP-DOWN
PROTECTOR	• OVERLOAD PROTECTOR FOR COMPRESSOR • INTERNAL PROTECTOR FOR FAN MOTOR
TEMPERATURE CONTROL	THERMOSTAT
ROCKER SWITCH-1	2 POSITIONS(POWER ON, POWER OFF)
ROCKER SWITCH-2	2 POSITIONS(HI FAN, LOW FAN)
FAN MOTOR	6 POLES

NOTICE **SPECIFICATIONS ARE SUBJECT TO MINOR CHANGE WITHOUT NOTICE FOR FURTHER IMPROVEMENT.**

Installation

This air conditioner is designed with a button-down chassis so it can be easily installed in a window.

Select the Best Location

1. To prevent vibration and noise, make sure the unit is installed securely and firmly.
2. Install the unit where the sun does not shine directly on the unit.
3. The outside of the cabinet must extend outward for at least 10" and there should be no obstacles, such as a fence or wall, within 20" from the back of the cabinet because it will prevent heat radiation of the condenser. Restriction of outside air will greatly reduce the cooling efficiency of the air conditioner.

CAUTION: All side louvers of the cabinet must remain exposed on the outdside of the structure.

4. Install the unit slanted slightly so the back is slightly lower than the front (about 1/4"). This will force condensed water to the outside.
5. Install the unit with the bottom about 30"~60" above the floor level.

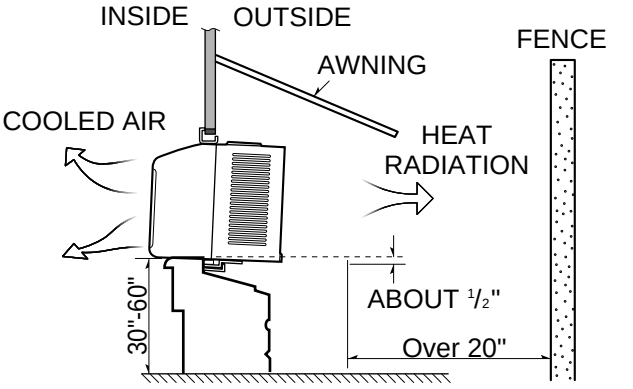

Figure 1

How to Install

Window Requirements

NOTICE **All supporting parts should be secured to firm wood, masonry, or metal.**

1. This unit is designed for installation in standard double hung windows with actual opening widths of 21" to 35". The upper and lower sash must open sufficiently to allow a clear vertical opening of 12" from the bottom of the sash to the window stool.
2. If storm window presents interference, fasten a 2" wide wood strip to the inner window sill across the full width of the sill. The wood strip should be thick enough to raise the height of the window sill so that the unit can be installed without interference by the storm window frame. See Figure. 3. Top of wood strip should be approximately 3/4" higher than the storm window frame (STORM WINDOW FRAME) or wood strip (OUTDOORS) to help condensation to drain properly to the outside.
3. Install a second wood strip (approximately 6" long by 11/2" wide and same thickness as first strip) in the center of the outer sill flush against the back off the inner sill. This will raise the L bracket as shown Figure. 3.
4. If the distance between STORM WINDOW FRAME and WOOD STRIP MOUNTED ON TOP OF INNER SILL is more than 1", two of wood strip are not necessary.

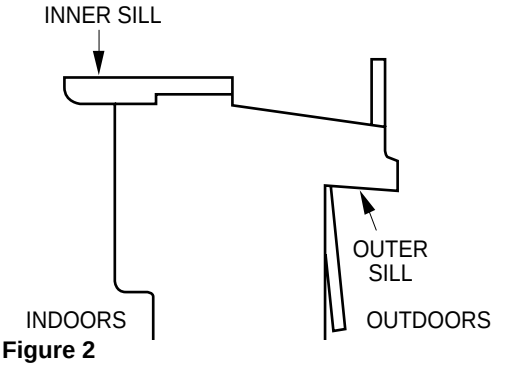

Figure 2

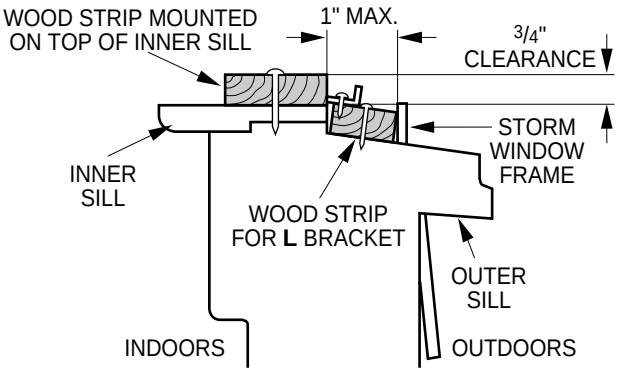

Figure 3

Installation Kits Contents(some Models)

HARDWARE

TYPE A: 14EA (SHORT SCREW)	TYPE B: 2EA (WOOD SCREW)	TYPE C: 2EA (WOOD SCREW)	TYPE D: 3EA (**L** BACKET)
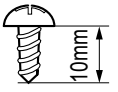	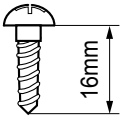	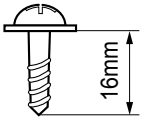	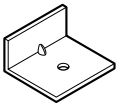
TYPE E: 1EA (SEAL STRIP)	**TYPE F: 1EA (SASH SEAL)**	**TYPE G: 2EA (GUIDE PANEL)**	**TYPE H: 1EA (UPPER GUIDE)**
(Adhesive backed)	(Not adhesive backed)	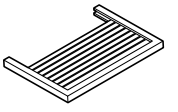	

Before Installation (Some Models Including Installation Kit)

1. Insert the guide panels into the guides of the air conditioner. Fasten the curtains to the unit with screws (TYPE A), as shown Figure. 4.

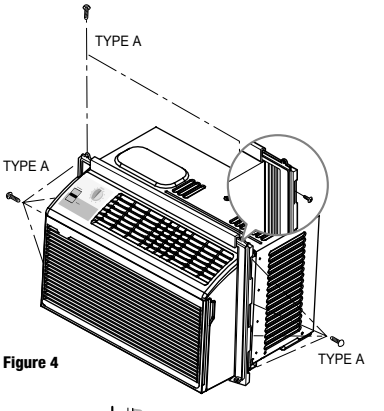

Figure 4

2. Cut the adhesive-backed seal strip (TYPE E) to the window width.
   Remove the backing from the seal strip and attach the seal strip to the underside of the bottom window. (Figure. 5)

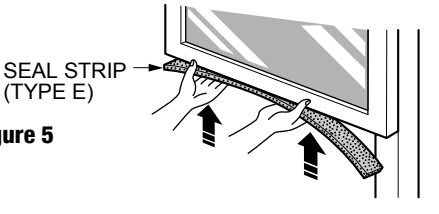

Figure 5

Start Installation (Some Models Including Installation Kit)

1. Locating Unit in Window

Open the window and mark center line with pencil on the center of the inner sill, as shown in Figure. 6.

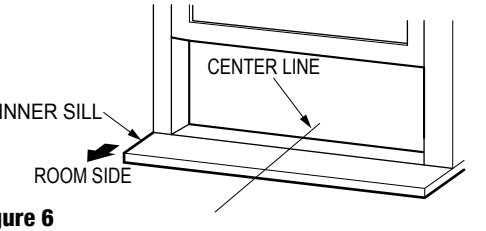

Figure 6

2. Attach L Bracket

a. Install the L brackets behind the inner window sill, with the short side of bracket as shown. Use the 2 screws (TYPE A) provided.
b. The bracket helps to hold unit securely in place. Be sure to place bracket edge flush against back of inner sill. See Figure.7.

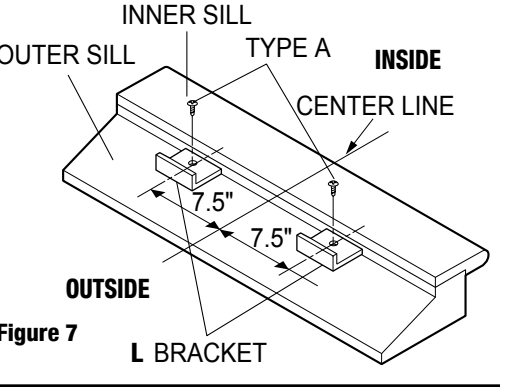

Figure 7

CAUTION: During the following step, hold unit firmly until window sash is lowered to top channel behind side panel frames. Personal injury or property damage may result if unit falls from window.

3. Install the Air Conditioner in the Window

a. Carefully lift the air conditioner and slide it into the open window. Make sure the bottom guide of the air conditioner drops into the notches of the L bracket.

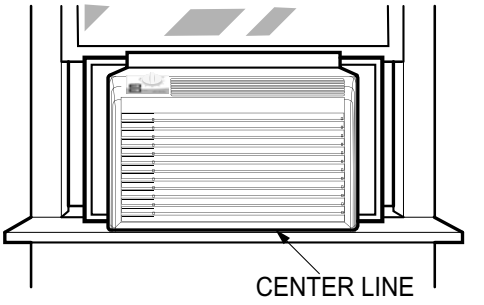

Figure 8

IMPORTANT :

When the air conditioner drops into the **L** bracket, the air conditioner will be centered in window opening as shown in Figure. 8.

b. While steadying the air conditioner, carefully bring the window sash down behind the upper guide of the air conditioner, as shown in Figure. 9.

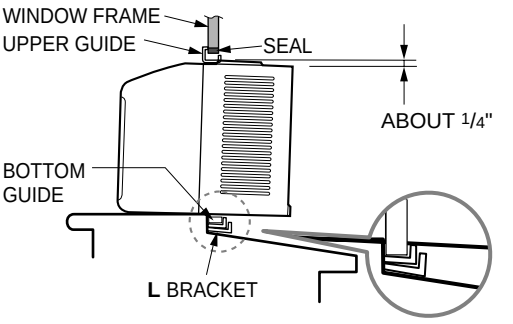

Figure 9

4. Secure the Guide Panels

Extend the guide panels (TYPE G) to fill the window opening using 2 screws (TYPE B), 2 screws(TYPE C) to secure them as shown in Figure. 10.

5. Install the Sash Seal and Sash Lock

a. Cut the sash seal (TYPE F) to the window width. Stuff the sash seal between the glass and the window to prevent air and insects from getting into the room, as shown in Figure. 10.

b. Fasten the L bracket using a (TYPE A) screw, as shown in Figure. 10.

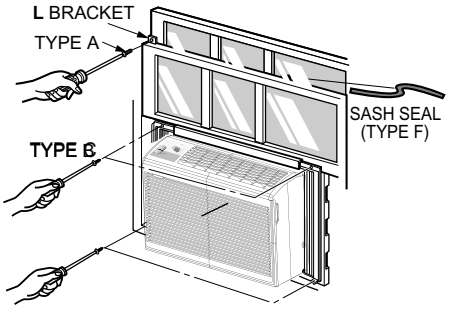

Figure 10

6. Window installation of room air conditioner is now completed. See ELECTRICAL DATA for attaching power cord to electrical outlet.

How to Secure the Drain pipe

In humid weather, excess water may cause the BASE PAN to overflow. To drain the water, remove the DRAIN CAP and secure the DRAIN PIPE to the rear hole of the BASE PAN. (Figure. 11)

Press the drain pipe into the hole by pushing down and away from the fins to avoid injury.

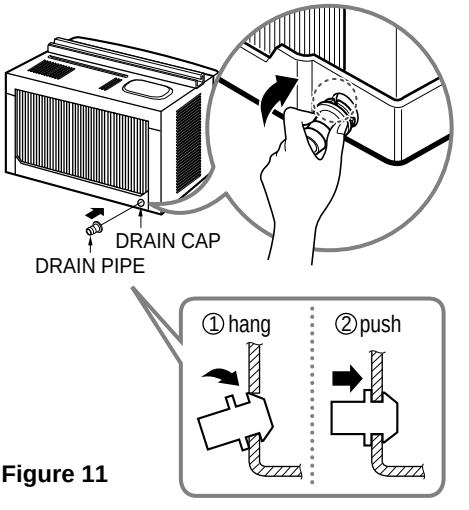

Figure 11

Operation

Feature

- DESIGNED FOR COOLING ONLY
- POWERFUL AND INCREDIBLE COOLING
- TOP-DOWN CHASSIS FOR THE SIMPLE INSTALLATION AND SERVICE
- BUILT-IN ADJUSTABLE THERMOSTAT
- WASHABLE ONE-TOUCH FILTER
- COMPACT SIZE

Insulation Resistance Test

1. Unplug the power cord and connect a jumper between 2 pins (black and white).
2. The grounding conductor (green or green and yellow) is to be open.
3. Measure the resistance value with an ohm meter between the jumpered lead and each exposed metallic part on the equipment at all positions [except Off] of the ROCKER SWITCH.
4. The value should be over 1 MΩ.

About the Controls or the Air Conditioner

CAUTION:If you turn off the air conditioner or switch from cooling to the fan,wait at least 3 minutes before setting to cooling again.

▷ **POWER** -Turns air conditioner off.
▷ **FAN SPEED "LOW"** Low speed fan operation with cooling or not.
▷ **FAN SPEED "HI"** High speed fan operation with cooling or not.

This automatically controls the temperature of indoor air.Turn the knob so that arrow points to the cooler marks for more moderate cooling.

▷ **Normal Fan**
1. Turn the FAN speed mode switch to the "HI" or the "LOW" setting
2. Set the thermostat control to the temperature mark "Fan Only"

▷ **Normal cooling**
1. Turn the FAN speed mode switch to the "HI" or the "LOW" setting
2. Set the thermostat control to the desire temperature (the mid-point is a good starting position).
   If the room temperature is not satisfactory after a reasonable time, adjust the control to a warmer setting, as appropriate.

▷ **Maximum cooling**
1. Turn the FAN speed mode switch to the "HI" setting
2. Set the thermostat control to the cooler temperature mark.

▷ **Quieter operation**
1. Turn the FAN speed mode switch to the "LOW" setting
2. Set the thermostat control as needed.

Disassembly

Mechanical Parts

1. FRONT GRILLE

1. Disconnect the unit from source of power.
2. Using a screwdriver, remove the screw from the front grille. (See Figure 13)
3. Push the front grille up from the bottom.
   Pull the top of the front grille away from the cabinet as the top tabs lift out of their slots. (See Figure 14)
4. Replace the grille by placing the tabs in the slots and push the grille until it snaps into place.

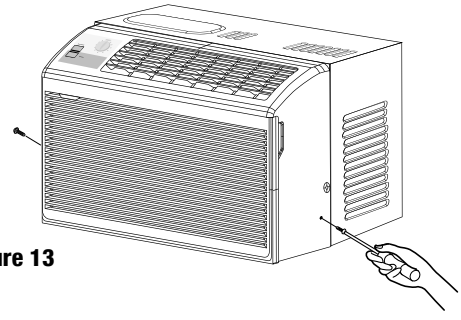

Figure 13

2. CABINET

1. Disconnect the unit from the power source.
2. Remove the front grille. (Refer to section 1)
3. Remove 10 screws that secure the cabinet to the base pan and condenser. (See Figure 15)
4. Lift the cabinet from the unit.
5. Re-install by referring to the procedures above.

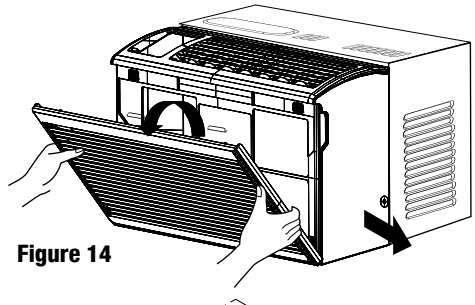

Figure 14

3. CONTROL PANEL

1. Disconnect the unit from the power source.
2. Remove the front grille. (Refer to Section 1)
3. Remove the cabinet. (Refer to Section 2)
4. Remove 2 screws that secure the control panel to control box and base pan. (See Figure 16)
5. Pull the control board toward yourself.

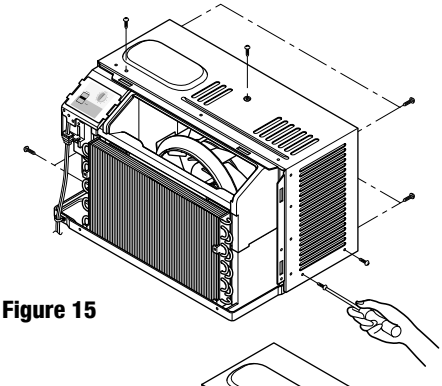

Figure 15

NOTICE **Controls, wires, and capacitor are now accessible for servicing. Discharge the capacitor before servicing.**

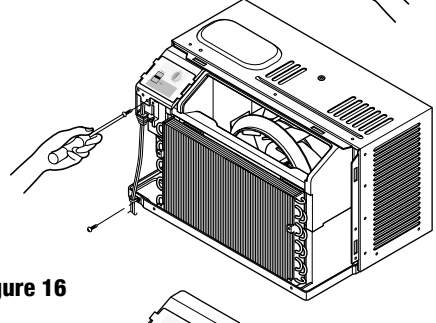

Figure 16

6. Disconnect one housing terminal and 3 wires for the fan motor and compressor. (See Figure 17)
7. Re-install components by referring to procedures above. (Refer to wiring diagram on page 19 in this manual or on control box.)

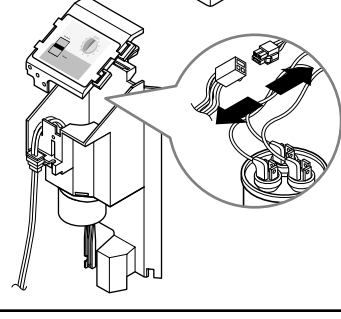

Figure 17

Air Handling Parts

4. AIR GUIDE UPPER

1. Disconnect the unit from the power source.
2. Remove the front grille. (Refer to Section 1)
3. Remove the cabinet. (Refer to Section 2)
4. Remove the control board. (Refer to Section 3)
5. Remove tape that attached the air guide upper and lower.
6. Lift air guide upper upward. (See Figure 18)
7. Re-install by referring to the procedures above.

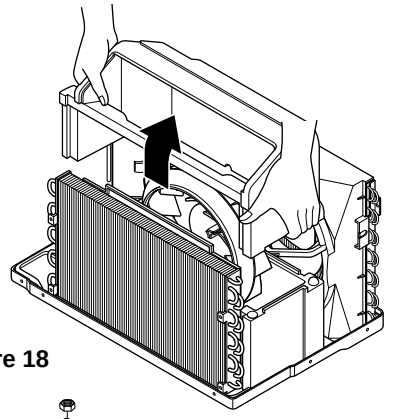

Figure 18

5. ORIFICE, TURBO FAN AND FAN

1. Disconnect the unit from the power source.
2. Remove the front grille. (Refer to Section 1)
3. Remove the cabinet. (Refer to Section 2)
4. Remove the control panel. (Refer to Section 3)
5. Remove the air guide upper. (Refer to Section 4)
6. Remove 2 screws that secure the condenser to the base pan.
7. Remove the screw that secures the shroud to channel of condenser.
8. Press the snap area of shroud with your thumbs. This allows you to remove it from the condenser.
9. Remove 1 screw that secure the evaporator to the base pan. (See Figure 19)
10. Remove the orifice by pushing the snap area of the air guide blower. (See Figure 20)
11. Remove the clamp springs which are clamped to the boss of fan and turbo fan by hand plier. (See Figure 21)
12. Pull the fan and turbo fan outward.
13. Re-install by referring to the procedures above.

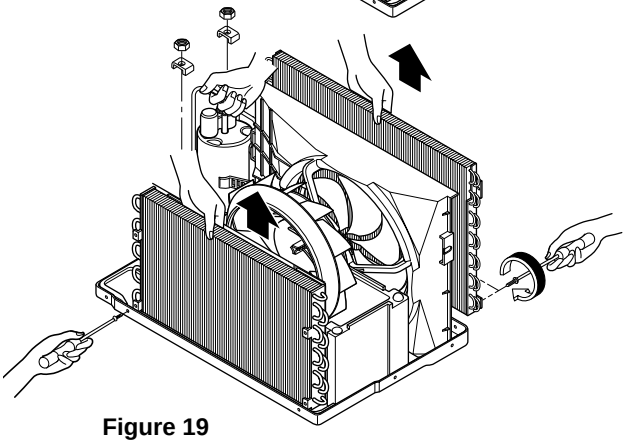

Figure 19

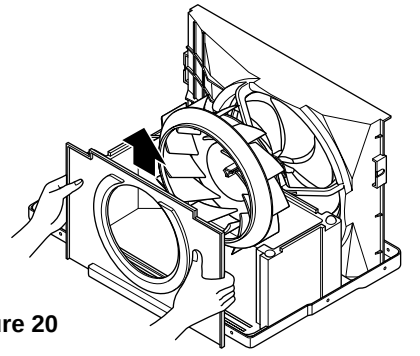

Figure 20

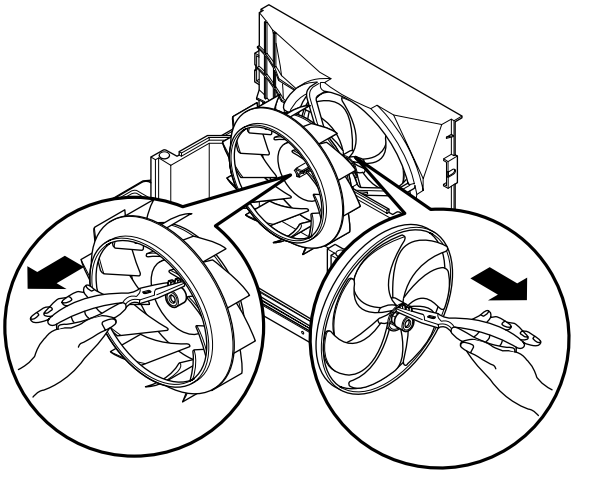

Figure 21

6. MOTOR

1. Disconnect the unit from the power source.
2. Remove the front grille. (Refer to Section 1)
3. Remove the cabinet. (Refer to Section 2)
4. Remove the control panel. (Refer to Section 3)
5. Remove the air guide upper. (Refer to Section 4)
6. Remove the compressor, turbo fan, axial fan and shroud. (Refer to Section 5)
7. Remove 4 screws that secure the motor to the mount motor of shroud. (See Figure 22)
8. Remove the motor.
9. Re-install by referring to the procedures above.

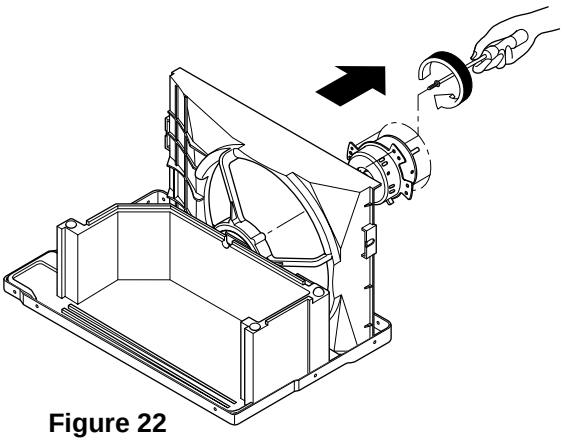

Figure 22

7. AIR GUIDE LOWER AND SHROUD

1. Disconnect the unit from the power source.
2. Remove the front grille. (Refer to Section 1)
3. Remove the cabinet. (Refer to Section 2)
4. Remove the control panel. (Refer to Section 3)
5. Remove the air guide upper. (Refer to Section 4)
6. Remove the compressor, turbo fan, axial fan. (Refer to Section 5)
7. Remove the motor. (Refer to Section 6)
8. Remove 2 screws that secure the shroud to the base pan. (See Figure 23)
9. Lift air guide lower and shroud upward. (See Figure 23)
10. Re-install by referring to the procedures above.

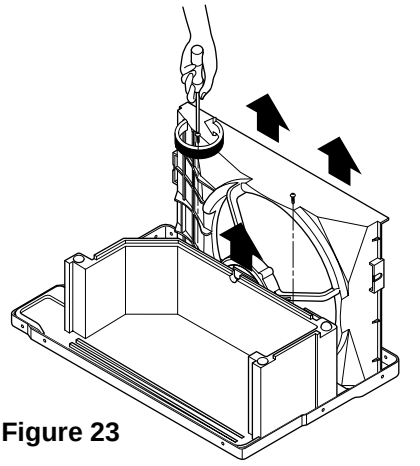

Figure 23

Electrical Parts

8. OVERLOAD PROTECTOR

1. Remove the front grille and cabinet. (Refer to Section 1, 2)
2. Remove the nut which fastens the terminal cover.
3. Remove the terminal cover.
4. Remove all the leads from the overload protector.
5. Remove the overload protector.
6. Re-install the components by referring to the removal procedure above. (See Figure 24)

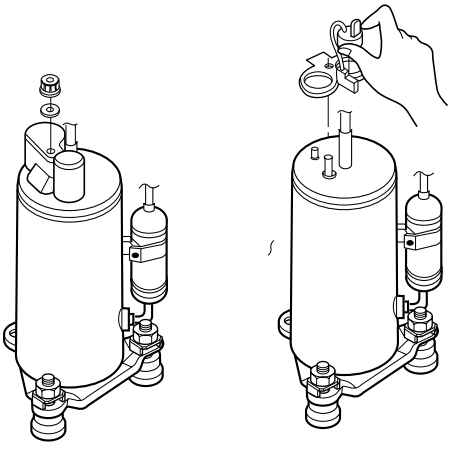

Figure 24

9. COMPRESSOR

1. Remove the front grille and cabinet. (Refer to Section 1, 2)
2. Discharge the refrigerant by using a refrigerant recovery system.
3. Remove the overload protector. (Refer to Section 8)
4. After discharging the unit completely, unbrace the suction and discharge pipes at the compressor connections.
5. Remove 3 nuts which fasten the compressor.
6. Remove the compressor.
7. Re-install by referring to the removal procedure above. (See Figure 25)

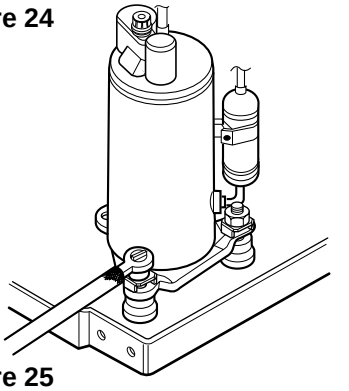

Figure 25

10. CAPACITOR

1. Remove the cabinet. (Refer to Section 2)
2. Remove the control panel. (Refer to Section 3)
3. Discharge the capacitor by placing a 20 KΩ resistor across the capacitor terminals.
4. Remove all the leads of capacitor terminals.
5. Re-install the components by referring to the removal procedure above. (See Figure 26)

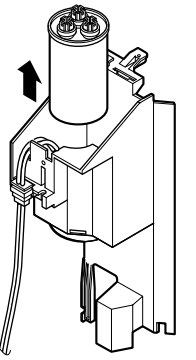

Figure 26

11. THERMOSTAT

1. Remove the cabinet. (Refer to Section 2)
2. Remove the control panel. (Refer to Section 3)
3. Remove 2 screws which fasten the thermostat. (See Figure 27)
4. Remove all the leads of the thermostat terminals.
5. Remove the thermostat.
6. Re-install the components by referring to the removal procedure above.

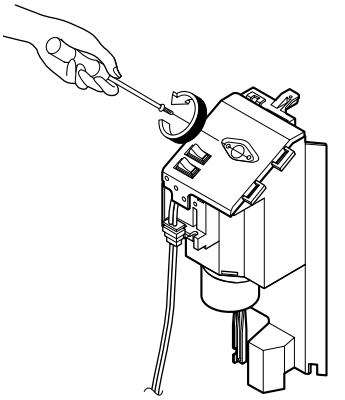

Figure 27

12. ROCKER SWITCH

1. Remove the cabinet. (Refer to Section 2)
2. Remove the control board. (Refer to Section 3)
3. Remove all the leads of the rotary switch terminals.
4. Remove the rocker switch.(See Figure 28)
5. Re-install the components by referring to the removal procedure above.

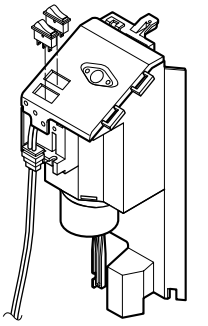

Figure 28

13. POWER CORD

1. Disconnect the unit from source of power.
2. Remove the front grille. (Refer to Section 1)
3. Remove the cabinet. (Refer to Section .2)
4. Remove a screw that secures control panel to control box. (Refer to Section 3)
5. Pull the power cord. (See Figure 29)
6. Re-install by referring to procedures above.

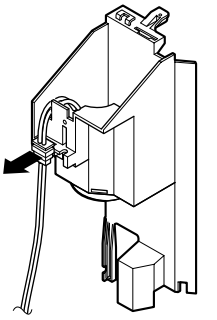

Figure 29

Refrigerating Cycle

14. CONDENSER

1. Remove the cabinet. (Refer to Section 2)
2. Discharge the refrigerant by using a refrigerant recovery system.
3. Remove 2 screws which fasten the condenser. (See Figure 30)
4. After discharging the refrigerant completely, unbraze the interconnecting tube at the condenser connections.
5. Remove the condenser.
6. Re-install by referring to the procedures above.

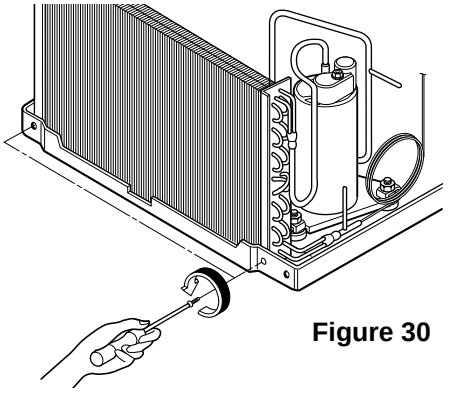

Figure 30

15. EVAPORATOR

1. Remove the cabinet. (Refer to Section 2)
2. Discharge the refrigerant by using a refrigerant recovery system.
3. Remove the air guide upper. (Refer to Section 4)
4. After discharging the refrigerant completely, unbraze the interconnecting tube at the evaporator connections.
5. Remove the evaporator.
6. Re-install by referring to the procedures above.

16. CAPILLARY TUBE

1. Remove the cabinet. (Refer to Section 2)
2. Discharge the refrigerant by using a refrigerant recovery system.
3. Remove the air guide upper. (Refer to Section 4)
4. After discharging the refrigerant completely, unbraze the interconnecting tube of the capillary tube.
5. Remove the capillary tube.
6. Re-install by referring to the procedures above.

NOTICE **Replacement of the refrigeration cycle.**

1. When replacing the refrigerating cycle, be sure to discharge the refrigerant by using a refrigerant recovery system.
2. After discharging the unit completely, remove the desired components, and unbraze the pinch-off tubes.
3. Solder service valves into the pinch-off tube ports, leaving the valves open.
4. Solder the pinch-off tubes with service valves.
5. After completing the above procedures, the valve must be closed and left in place on the system for any subsequent procedures.
6. Evacuate as follows:
   - 6-1. Connect the vacuum pump, as illustrated in figure 31A.
   - 6-2. Start the vacuum pump. Slowly open manifold valves A and B with two full turns counter-clockwise and leave the valves closed. The vacuum pump is now pulling through valves A and B up to valve C by means of manifold and the entire system.

CAUTION: If high vacuum equipment is used, just crack valves A and B for a few minutes, then open slowly with the two full turns counter-clockwise. This will keep oil from foaming and being drawn into the vacuum pump.

   - 6-3. Operate the vacuum pump for 20 to 30 minutes, until 600 micron vacuum is obtained. Close valves A and B and observe vacuum gauge for a few minutes. A rise in pressure would indicate a possible leak or moisture remaining in the system. With valves A and B closed, stop the vacuum pump.
   - 6-4. Remove the hose from the vacuum pump and place it on the charging cylinder. See figure 20B. Open valve C. Discharge the line at the manifold connection.
   - 6-5. The system is now ready for final charging.
7. Recharge as follows:
   - 7-1. Rotary compressor systems are charged from the high-side. If the total charge cannot be put in the high-side, the balance will be put in the suction line through the access valve which is installed as the system is opened.
   - 7-2. Connect the charging cylinder as shown in figure 31B. With valve C open, discharge the hose at the manifold connection.
   - 7-3. Open valve A and allow the proper charge to enter the system. Valve B is still closed.
   - 7-4. If more charge is required, the high-side will not take it. Close valve A.
   - 7-5. With the unit running, open valve B and add the balance of the charge.
     - a. Do not add the liquid refrigerant to the low-side.
     - b. Watch the low-side gauge, allow pressure to rise to 30 lbs(0.2MP).
     - c. Turn off valve B and allow the pressure to drop.
     - d. Repeat steps B and C until the balance of the charge is in the system.
   - 7-6. When the unit is operating correctly, use the pinch-off tool with the unit still running and the clamp on the pinch-off tube. Using a tube cutter, cut the pinch-off tube about 2 inches from the pinch-off tool. Use sil-fos solder and solder the pinch-off tube closed. Turn off the unit, allow setting for a while and then test the leakage of the pinch-off connection.

Equipment needed: Vacuum pump, charging cylinder, manifold gauge, brazing equipment, pinch-off tool capable of making a vapor proof seal, leak detector, tubing cutter, hand tools to remove components and service valve.

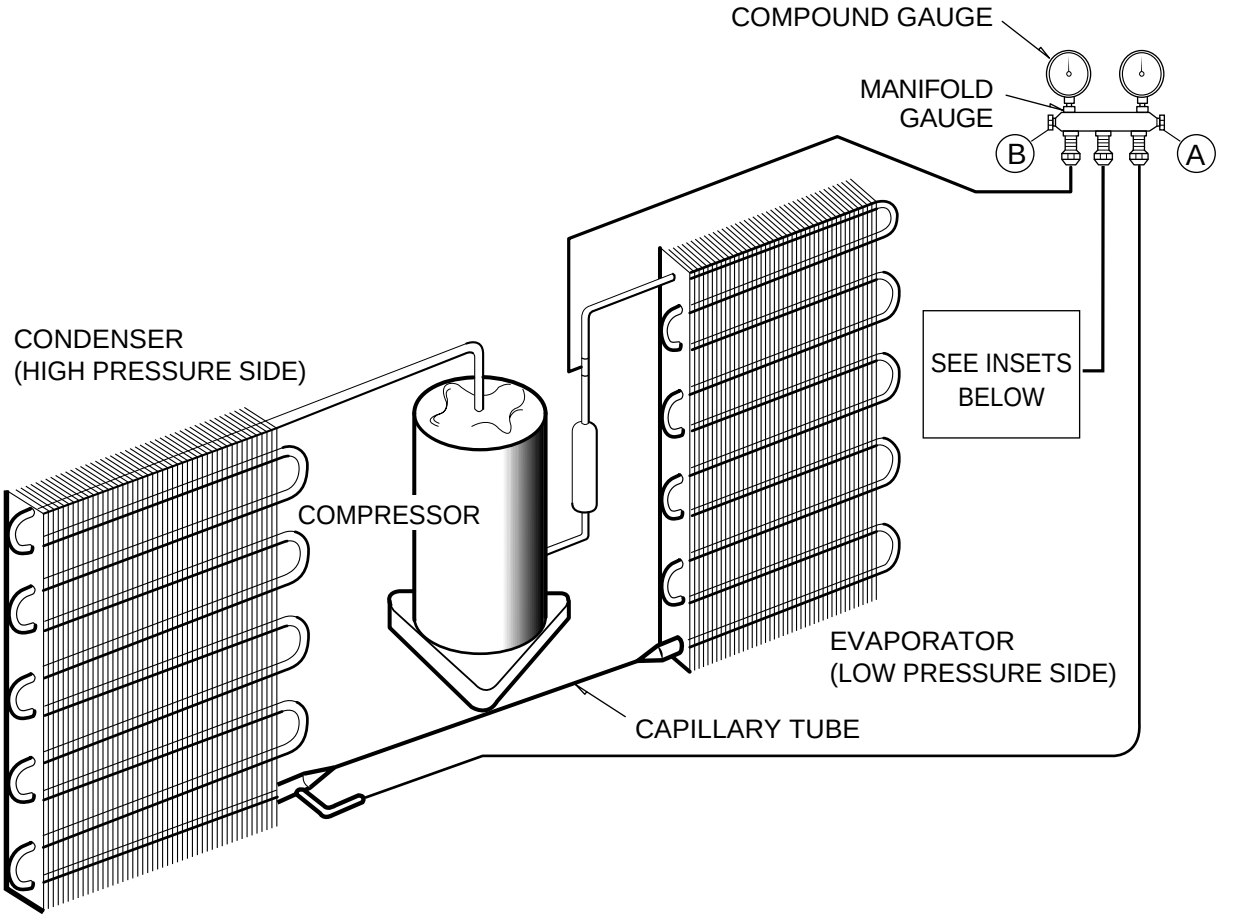

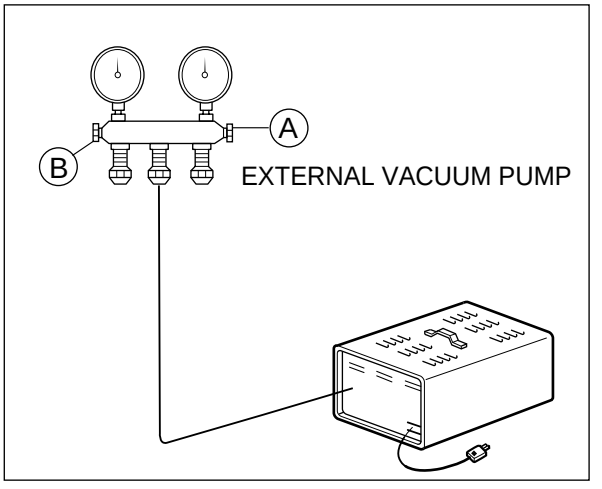

Figure 31A-Pulling Vacuum

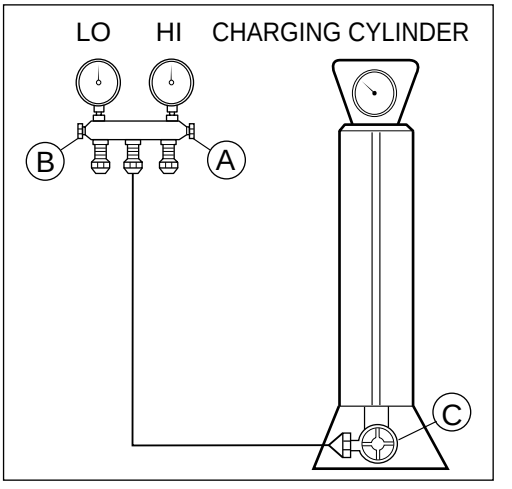

Figure 31B-Charging

Schematic Diagram

Wiring Diagram

• MODEL: HBLG5004, HBLG5004T4

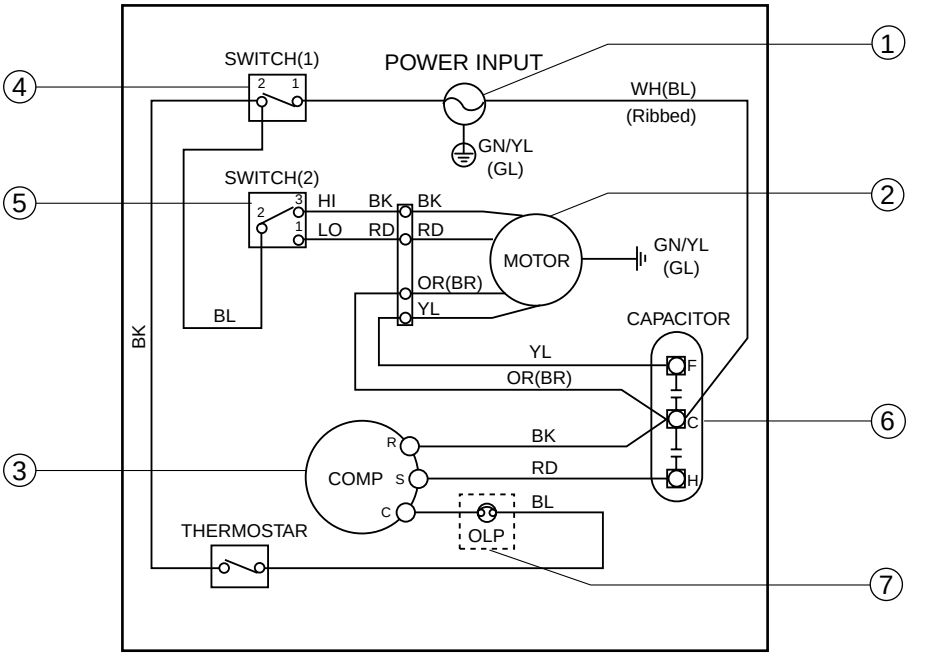

REF. NO	DESCRIPTION & NAME	Q'TY
1	POWER CORD ASSY	1
2	FAN MOTOR	1
3	COMPRESSOR	1
4	ROCKER SWITCH-1	1
5	ROCKER SWITCH-2	1
6	THERMOSTAT	1
7	CAPACITOR	1
8	OVERLOAD PROTECTOR	1

Troubleshooting Guide

Piping System

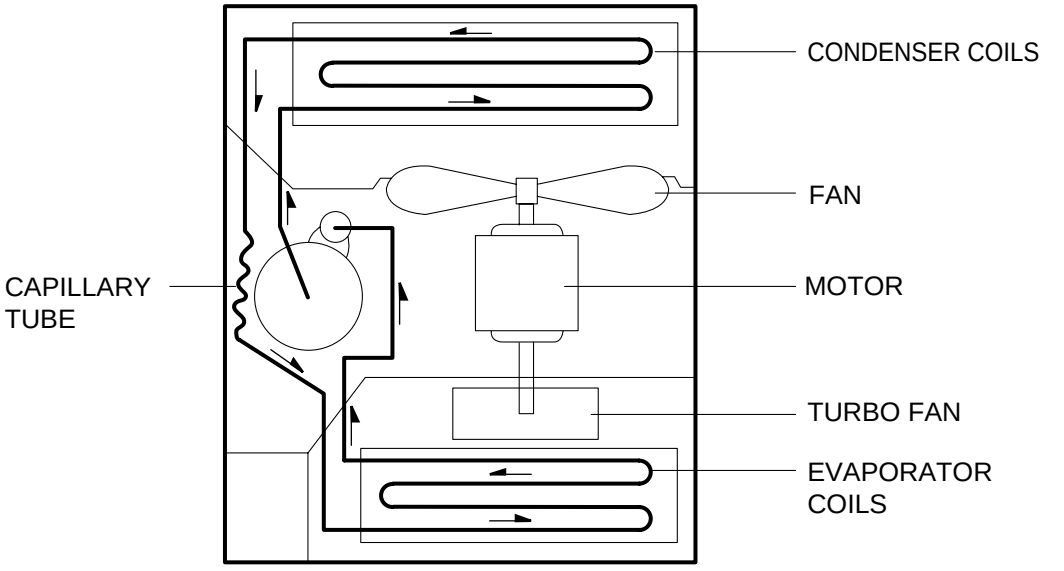

Following is a brief description of the important components and their function in what is called the refrigeration system. Reference should be made to Figure 32 to follow the refrigerating cycle and the flow of the refrigerant in the cooling cycle.

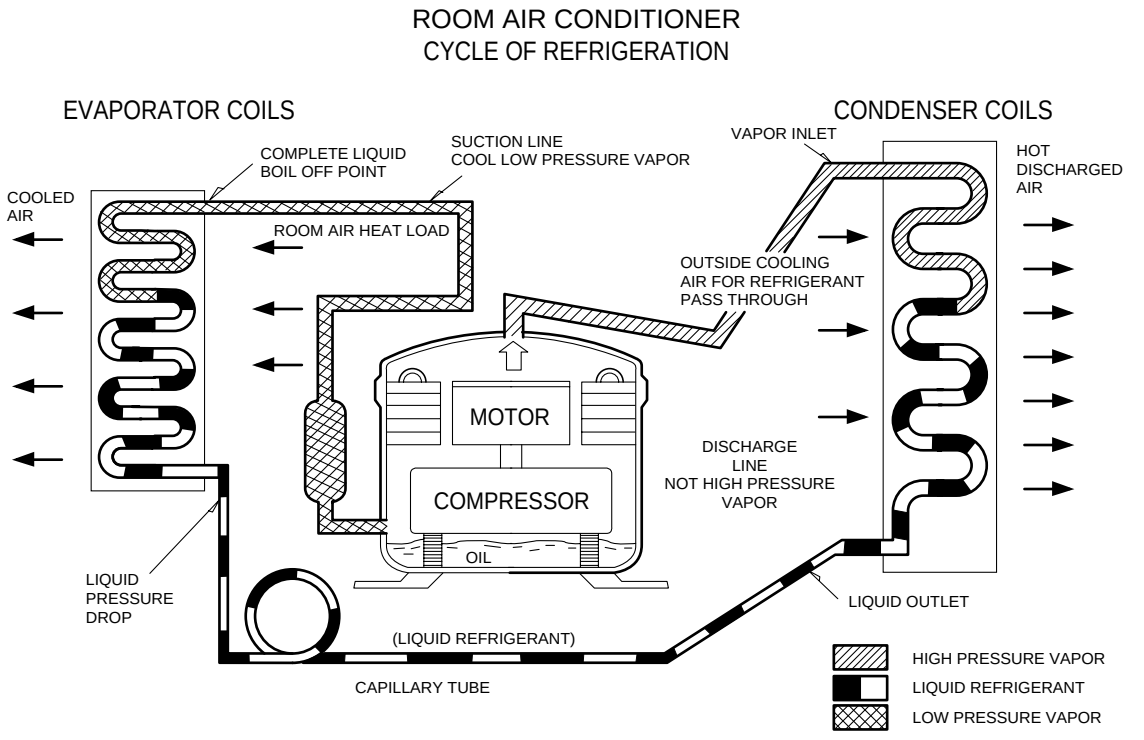

Figure 32

Troubleshooting Guide

In general, possible trouble is classified in two kinds.
The one is called Starting Failure which is caused by an electrical defect. The other is Ineffective Air Conditioning caused by a defect in the refrigeration circuit and improper application.

Unit is running but cooling is ineffective.

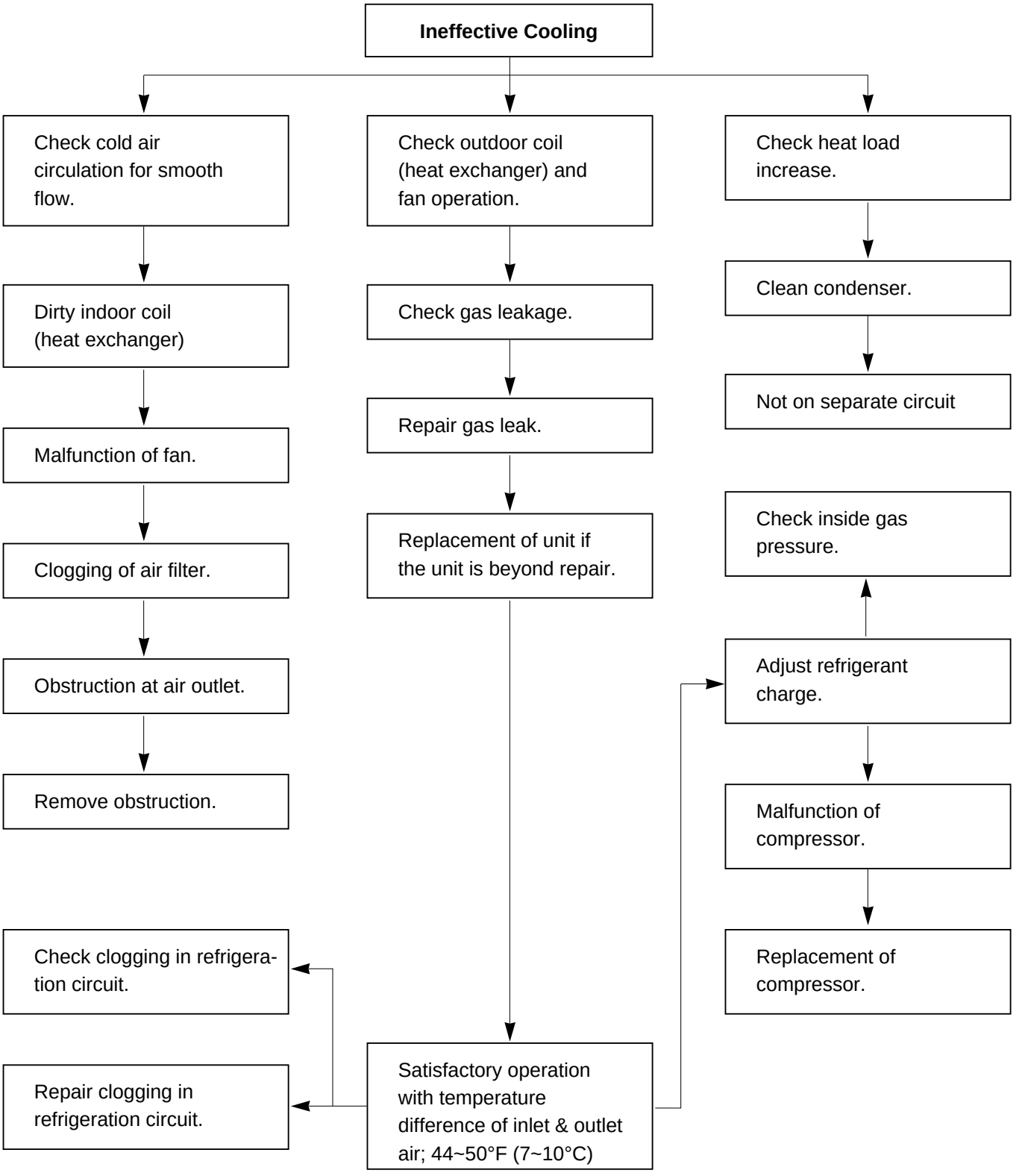

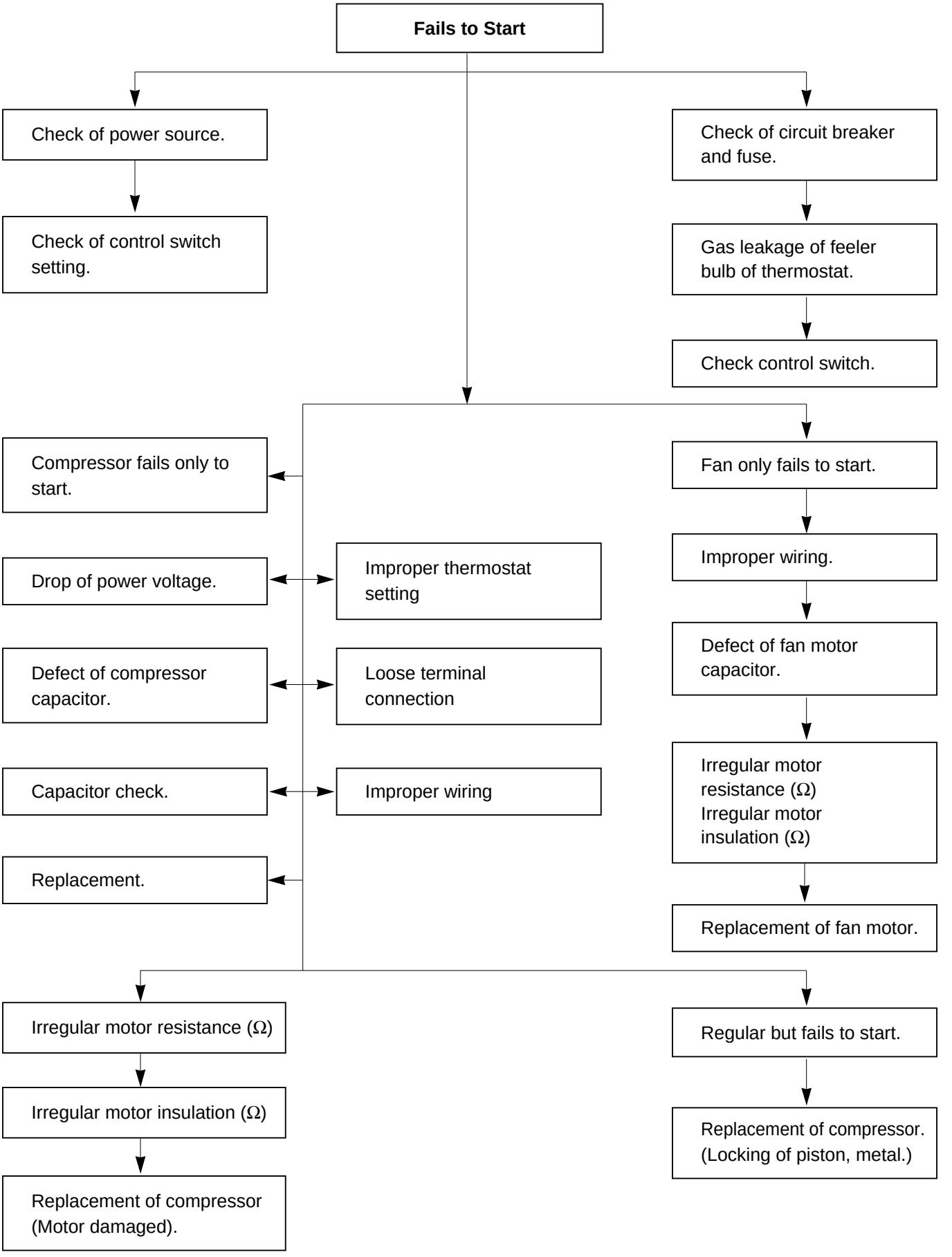
Fails to Start
Check of power source.
Check of control switch setting.
Check of circuit breaker and fuse.
Gas leakage of feeler bulb of thermostat.
Check control switch.
Compressor fails only to start.
Drop of power voltage.
Defect of compressor capacitor.
Capacitor check.
Replacement.
Improper thermostat setting
Loose terminal connection
Improper wiring
Fan only fails to start.
Improper wiring.
Defect of fan motor capacitor.
Irregular motor resistance (Ω)
Irregular motor insulation (Ω)
Replacement of fan motor.
Irregular motor resistance (Ω)
Irregular motor insulation (Ω)
Replacement of compressor (Motor damaged).
Regular but fails to start.
Replacement of compressor. (Locking of piston, metal.)

Room Air Conditioner Voltage Limits

NAME PLATE RATING	MINIMUM	MAXIMUM
115V ± 10%	103.5V	126.5V

COMPLAINT	CAUSE	REMEDY
Fan motor will not run.	No power	Check voltage at outlet. Correct if none.
	Power supply cord	Check voltage to rotary switch. If none, check power supply cord. Replace cord if circuit is open.
	Rocker switch	Check switch continuity. Refer to wiring diagram for terminal identification. Replace switch if defective.
	Wire disconnected or connection loose	Connect wire. Refer to wiring diagram for terminal identification. Repair or replace loose terminal.
	Capacitor (Discharge capacitor before testing.)	Test capacitor. Replace if not within ±10% of manufacturer's rating. Replace if shorted, open, or damaged.
	Will not rotate	Fan blade hitting shroud or blower wheel hitting scroll. Re-align assembly. Units using slinger ring condenser fans must have 0.22~0.25 inch clearance to the base. If necessary, shim up the bottom of the fan motor with mounting screw(s). Check fan motor bearings; if motor shaft will not rotate, replace the motor.
Fan motor runs.	Revolves on overload	Check voltage. See limits on this page. If not within limits, call an electrician. Test capacitor. Check bearings. Does the fan blade rotate freely? If not, replace fan motor. Pay attention to any change from high speed to low speed. If the speed does not change, replace the motor.

COMPLAINT	CAUSE	REMEDY
Fan motor noise.	Tubo Fan	If cracked, out of balance, or partially missing, replace it.
	Axial Fan	If cracked, out of balance, or partially missing, replace it.
	Loose set screw	Tighten it.
	Worn bearings	If knocking sounds continue when running or loose, replace the motor. If the motor hums or noise appears to be internal while running, replace motor.
Compressor will not run, fan motor runs.	Voltage	Check voltage. See the limits on the preceding page. If not within limits, call an electrician.
	Wiring	Check the wire connections; if loose, repair or replace the terminal. If the wires are disconnected, refer to wiring diagram for identification, and replace the wires. Check the wire connections; If not according to the wiring diagram, correct the connections.
	Rocker Switch	Check for continuity, refer to the wiring diagram for terminal identification. Replace the switch if the circuit is open.
	Thermostat	Check the position of knob. If not at the coldest setting, advance the knob to this setting and restart the unit.
		Check the continuity of the thermostat. Replace the thermostat if the circuit is open.
	Capacitor (discharge capacitor before servicing.)	Check the capacitor. Replace if not within ±10% of manufacturer's rating, replace if shorted, open, or damaged.
	Compressor	Check the compressor for open circuit or ground. If open or grounded, replace the compressor.
	Overload	Check the compressor overload if externally mounted. Replace if open. (If the compressor temperature is high, remove the overload, cool, and retest.)
Compressor cycles on overload.	Voltage	Check the voltage. See the limits on the preceding page. If voltage is not within these limits, call an electrician.
	Overload	Check overload, if externally mounted. Replace if open. (If the compressor temperature is high, remove the overload, cool, and retest.)

COMPLAINT	CAUSE	REMEDY
Compressor cycles on overload.	Fan motor	If not running, determine the cause. Replace if required.
	Condenser air flow restriction	Remove the cabinet, inspect the interior surface of the condenser. If restricted, clean carefully with a vacuum cleaner (do not damage fins) or brush. Clean the interior base before re-assembling.
	Condenser fins (damaged)	If the condenser fins are closed over a large area on the coil surface, head pressures will increase, causing the compressor to cycle. Straighten the fins or replace the coil.
	Capacitor	Test the capacitor.
	Wiring	Check the terminals. If loose, repair or replace.
	Refrigeration system	Check the system for a restriction.
Insufficient cooling	Air filter	If restricted, clean or replace.
	Unit undersized	Determine if the unit is properly sized for the area to be cooled.
Excessive noise	Turbo Fan or Axial Fan	Check the set screw, or clamp. If loose or missing, correct. If the tubo fan or axial fan is hitting scroll or barrier, rearrange the air handling parts.
	Copper tubing	Remove the cabinet and carefully rearrange the tubing not to contact the cabinet, compressor, shroud, and barrier.

Exploded View

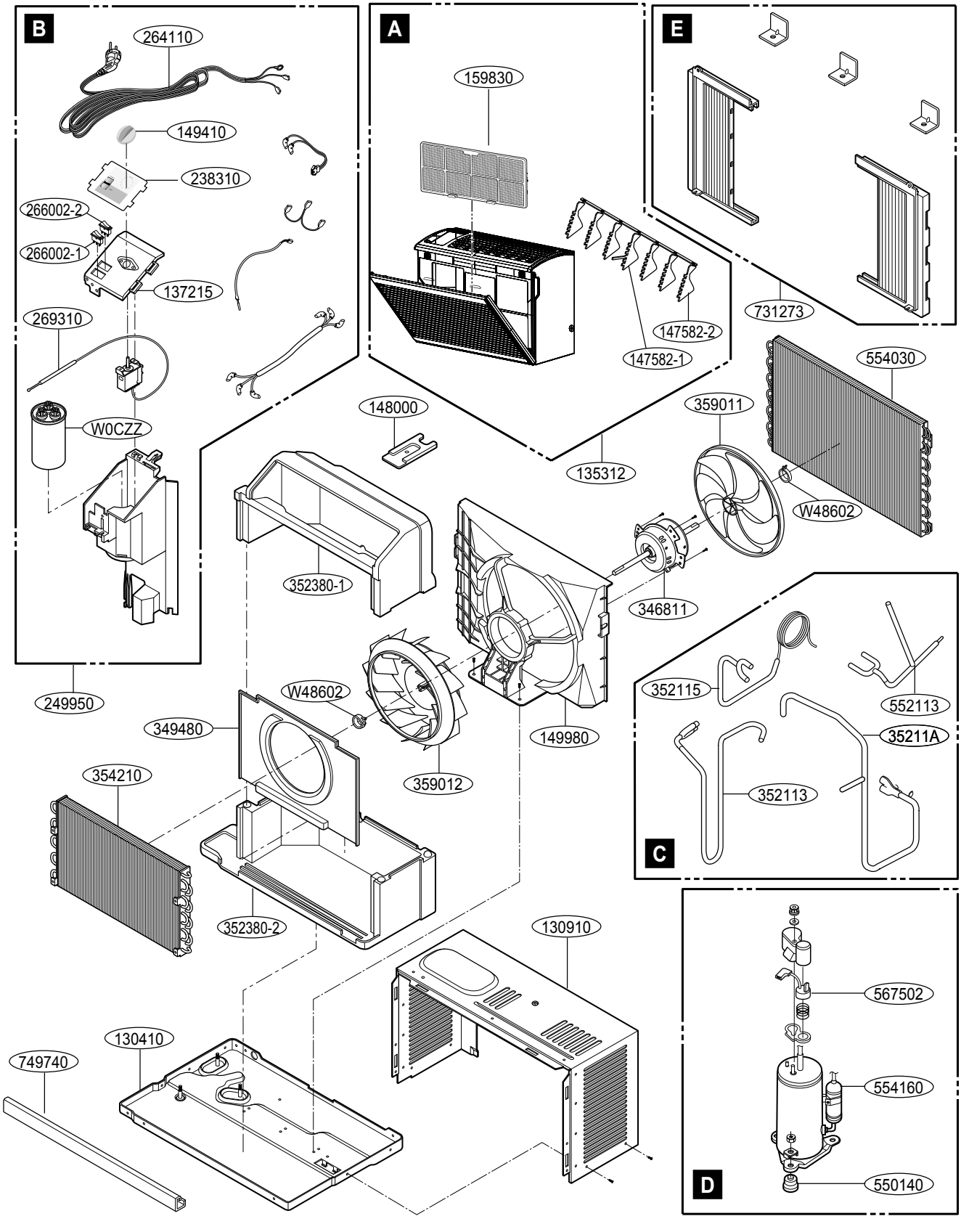

February, 2005
P/No.: 3828A29003D
Printed in China