This Owner's Manual is provided and hosted by Appliance Factory Parts.

Appliance Factory Parts
Experts in BBQ, Humidifier, & Appliance Parts
1-800-955-7075

GENERAL 4172
Owner's Manual

Shop genuine replacement parts for GENERAL 4172

Find Your GENERAL Air Cleaner Parts - Select From 69 Models

-------- Manual continues below --------

Operation And Maintenance Manual

SSCB-7 SERIES
SEMI-FLUSH CEILING MOUNTED
ELECTRONIC AIR CLEANER

IMPORTANT: PLEASE READ MANUAL BEFORE INSTALLING, OPERATING, CLEANING OR SERVICING UNIT

IMPORTANT: Please read entire instructions before installing the Electronic Air Cleaner.

CONTENTS

SAFETY CONSIDERATIONS	2
WHAT THE ELECTRONIC AIR CLEANER DOES	2
BENEFITS	2
HOW IT WORKS	2
MAJOR COMPONENTS	3
INSTALLATION	3-4
Mounting	3
Wiring	4
OPERATION & MAINTENANCE	4
Operation Check	4
Maintenance Schedule	4
Cleaning	4
SERVICE	5-7
Testing For High Voltage At Power Board	5
Measuring High Voltage At Power Board	5
Replacing A Performance Light	5
Replacing A Power Board	5
Testing The 24 V Transformer	6
Replacing The 24 V Transformer	6
Setting Voltage Of Power Board	6
Setting Approximate Voltage Without High Voltage Meter	6
Testing For Voltage at The Cell	6
Testing Cell For Bad Contacts	7
Testing Cell With An Ohmmeter	7
Replacing A Tungsten Wire	7
Replacing A Fan Motor	7
REMOTE SWITCH CONTROL	7
Electrical Schematic	8
TROUBLESHOOTING GUIDE	9
Exploded View	10
Parts List	10
Technical Data and Dimensions	11
WARRANTY	12

Certified for shock and electrical fire hazard only.

SAFETY CONSIDERATIONS

Read and follow instructions carefully. Follow all local electrical codes during installation. All wiring must conform to local and national electrical codes. Improper wiring or installation may damage the Air Cleaner.

Understand the signal words WARNING and CAUTION which are present in the Installation, Operation & Service Instructions.

WARNING and CAUTION signifies a hazard which could result in property damage, personal injury or death.

WARNING

Before beginning any installation or modification, be certain that the main line electrical disconnect switch is in **OFF** position. Electric shock could result. Tag disconnect switch with suitable warning labels.

Installation and servicing of Electronic Air Cleaners can be hazardous. Only trained and qualified service personnel should install, repair, or service Electronic Air Cleaners.

Untrained personnel can perform the basic maintenance functions of cleaning and replacing filters.

When working on air cleaning equipment, observe precautions in the manual, labels attached to the unit, and other safety precautions that may apply. Follow all safety codes. Wear safety glasses and work gloves.

WHAT THE ELECTRONIC AIR CLEANER DOES

Your High Efficiency Electronic Air Cleaner has been designed to remove tobacco smoke particles, cooking smoke and grease, atmospheric dust, coal dust, insecticide dust, mites, pollen, mold spores, fungi, bacteria, viruses and more down to 0.01 micron (0.01 micron = 1/2,540,000 of an inch).

BENEFITS

- Helps clear up a smokey environment quickly, so customers can dine more comfortably.
- Helps employees reduce suffering from irritated eyes, nasal congestion and respiratory problems that lead to absenteeism.
- Helps prevent damaging black and greasy particles from staining ceilings, walls and furnishings, reducing the amount of housekeeping and redecorating costs.
- Helps to lower energy bills by recycling air rather than exhausting expensive heated or cooled air.

HOW IT WORKS

This Air Cleaner works on the principle of "Electrostatic Precipitation". Millions of airborne pollutants are drawn through the intake grill on the bottom of the Air Cleaner and first pass through a Prefilter which removes all large visible particles such as lint. Next, smaller particles move to a two-stage electrostatic Collecting Cell where they are given a powerful positive charge by the ionizing wires. Charged particles then move into the collecting area where they are attracted to a series of grounded plates. Pollutants are held in this section like a magnet until washed away during cleaning. Clean air is then dispersed from the side grills in four directions allowing superior air flow circulation.

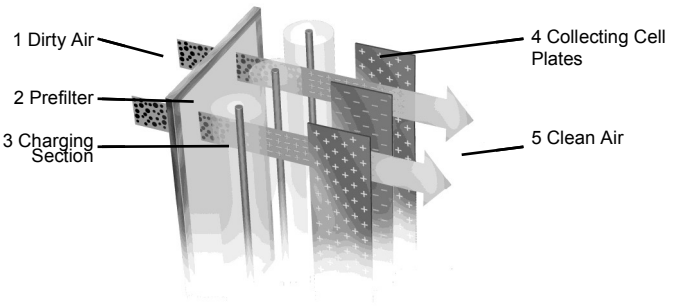

Fig. 1 — Electrostatic Precipitation

The Air Cleaner creates a circular air flow pattern which never allows air to rest at the ceiling.

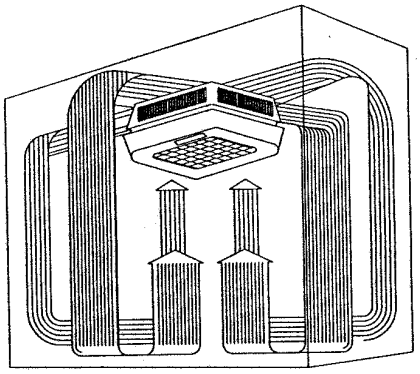

Fig. 2 — Coanda Air Flow

MAJOR COMPONENTS

Description

The Electronic Air Cleaner is approximately 24 x 28 x 15 in (61 x 71 x 38 cm) with 6 in (15.2 cm) of the unit above the ceiling. The cover and exhaust grill which remain below the ceiling are hinged to allow access to the cell and power board. The unit is rated at 700 CFM (1190 m^3/hr) on the highest speed setting.

Cabinet

The cabinet is constructed of 20 gauge steel. The external parts have a tough powder-coated, scratch-resistant finish. Access to the collecting cell, power box and prefilter is made by releasing the latches of the cover and allowing it to swing down.

The cover is interlocked to cut power to the unit when opened.

Prefilter

The washable prefilter measuring 12.5 x 20 in (31.75 x 50.8 cm) is constructed of multi-layers of aluminum mesh for maximum filtration of large particles.

Collecting Cell

The dual voltage collecting cell is constructed of heavy gauge aluminum to resist rust and damage. The first stage, the ionizing section, is charged at approximately 7500 VDC. The collecting plates are alternately grounded and charged at 5000 VDC. The arrow on the cells indicates the direction of air flow which must point up towards the fan motor.

Motor and Fan Blade

The motor is 1/33 HP, 1050 RPM, 3-speed, controlled by a 3-position slide switch. The motor is thermally protected. The fan blade is 14 in (35.5 cm) with a 20° pitch.

Electrical Compartment

The removable power box contains the speed control, system switch, high voltage power board, and performance indicator light.

The interlock switch is located in the cabinet body near the wiring compartment.

INSTALLATION

1. Read instructions carefully. Failure to do so may result in product damage or injury.
2. Make sure the sizing is correct for your application.
3. Installation should be done by a knowledgeable technician.
4. After installation, check out operation as provided in these instructions.

Mounting

1. Remove the unit from the box and lay the unit on its back, grill side up.
2. Release the grill by pushing the levers, located in the exhaust grill, toward each other and lift up.
4. Remove the 'S' hook from each chain, tilt cover up until the cover releases from the back hinges.
5. Remove the cell and prefilter from the unit.
6. Holes are provided in the cabinet to accommodate 5/16 in (8 mm) threaded rod. Threaded rod can be attached to the angle iron which is laid across the joists, by drilling holes through these supports. Pass threaded rod up through the supports and secure with two nuts and washers. This will allow adjustment of

Blower and motor are hidden above ceiling tiles for space conservation. Advantageous for low ceiling applications where a larger unit would be obstructive.

Hinged cover provides convenient access to grill, prefilter, collecting cell and electrical compartment. Safety interlock cuts power when cover is opened.

Rear hinges permit smooth release of cover for easy installation.

Removable intake grill for easy cleaning.

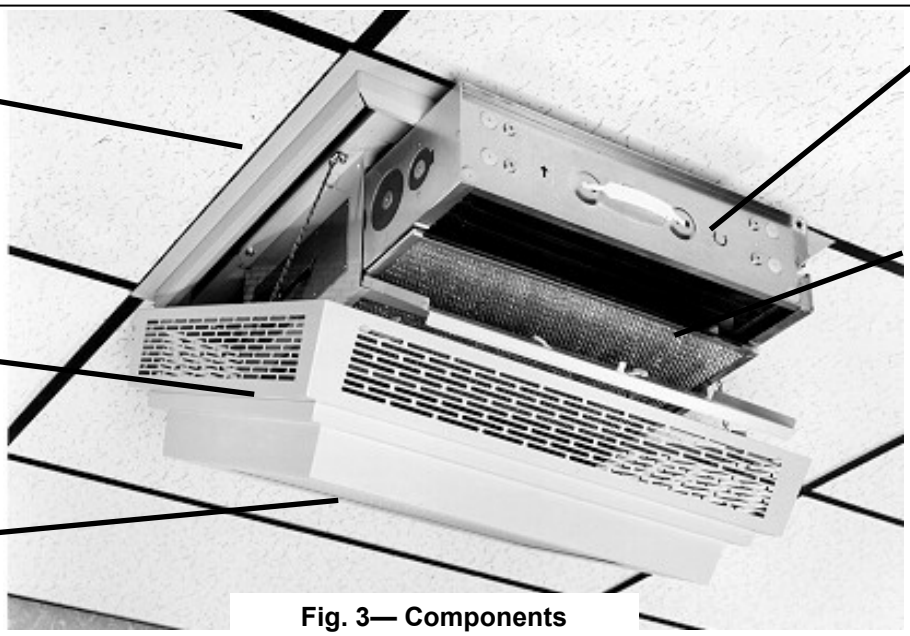

Heavy duty collecting cell captures airborne pollutants and simply washes clean.

Washable, aluminum mesh prefilter catches lint and large particles before they enter collecting cell.

3-speed fan control (not shown) allows adjustment of air flow to activity level in room.

Fig. 3— Components

the unit so that the flange is flush with the underside of the ceiling.

Leave enough room around the Air Cleaner for removal of collecting cell and prefilter.

7. Replace the cell, prefilter and cover. Hook up the safety chain to the cover.

Do not hang the unit with chain only. This will not give the unit the necessary stability when removing the cells or servicing the unit.

Wiring

WARNING

Electrical shock can cause injury or death. Be certain main line disconnect switch is off before wiring.

All wiring must comply with applicable codes and standards. See unit rating label for correct voltage and amperage.

1. Two knockouts are provided, one on top and one on the side of the unit, adjacent to the wiring compartment. For convenience, a wall switch may be installed near the Air Cleaner, in series with the power source, to turn the unit on and off.
2. Remove the cover of the wiring compartment to locate the input leads and ground stud. The Air Cleaner must be grounded for proper operation and safety.
3. Once the unit is mounted and wired, the cover can be replaced on the hinge and the chain replaced on the "S" hooks. Close the cover by sliding the levers toward the center and pushing the cover up into place. Release levers to lock the cover into place.

For information on wiring the remote switch control see page 7.

OPERATION & MAINTENANCE

Operation Check

1. With the cell and prefilter in place and the cover closed, turn the system switch **ON**.
2. Adjust the fan speed with the slide switch. Insure the unit functions on all speeds.
3. The performance light should be **ON**, which indicates the power board is functioning properly.
4. If the unit is not functioning properly see the "Troubleshooting Guide"

When the Air Cleaner is new it may arc or periodically make "snapping sounds". A slight odor of ozone may be noticeable. The arcing and odor are due to rough edges and burrs on the cell. These symptoms will disappear during the first few weeks of normal operation. The ozone levels are well below government standards for indoor air concentration.

Maintenance Schedule

The collecting cell and prefilter must be cleaned on a regular basis for the unit to function at its peak efficiency. The frequency of cleaning will vary from one environment to another. The following is an average wash cycle:

- Stores, Offices, Computer & Conference Rooms = **4 Weeks**
- Cafeterias, Restaurants, Lounges = **3-4 Weeks**
- Bars, Bingo halls = **1-3 Weeks**

The unit should be checked on a regular basis to determine the frequency of cleaning required in each location and a cleaning schedule established.

Cleaning

CAUTION

Make sure Air Cleaner switch is **OFF** before performing any maintenance or removing any components.

1. Turn off the system switch and wait 15 seconds for high voltage to dissipate.
2. Open the cover and cell access door and remove collecting cell and prefilter. **Cell plates are sharp. Handle with care.**
3. Place cell in tub and spray completely with **DAX Detergent**, allowing detergent to run down both sides of plates and ionizing wires. Let sit for 5 minutes. Rinse cell well with hot water (140ºF / 60ºC maximum). Repeat washing process if necessary.
4. If dirt or nicotine remains on plates, let cell soak in hot soapy water for 30 minutes. **Never use any instrument to clean the cell, as this may damage the ionizing wires or bend cell plates.**
5. Spray prefilter with **DAX Detergent** and rinse well.
6. To dry cell, tilt on 45º angle against wall with the arrow pointing sideways. Allow to dry completely for 10-24 hours. Place in sunlight for faster drying time.
7. When the cell and prefilter are dry, place them back into the unit. The arrow on the cell points up. The red fiberboard on the cell should line up with the contacts in the cabinet. Close door and cover. If the cell arcs when the switch is turned on or if the performance light does not come on, then the cell may be still wet. Allow more time for drying.

CAUTION

Damage to cell may occur if improperly handled or washed. **Do not wash cell in a dishwasher.** Never use any object to clean between the cell plates, as this may cause damage to plates or ionizing wires. Never place cell in oven to dry. The edges of the cell may be sharp - handle with care.

The use of **DAX Detergent** is strongly recommended for cleaning as it is a heavy-duty solution used expressly for removal of accumulated pollutants on cell plates. If used as directed, **DAX** will not harm aluminum or steel. Any problem arising out of the use of another cleaning agent will void the warranty. Do not use detergents that

are corrosive or abrasive or detergents containing chlorine or ammonia.

Fig. 4 — DAX Detergent is available in 35 ounce (1 litre) spray bottles or 1 gallon (4.54 L) and 4.8 gallons (22 L) containers from your installer or dealer.

SERVICE

WARNING

Electronic Air Cleaners use high voltage (low amperage). Only trained personnel should perform service. **USE CAUTION!** Electric shock can cause injury or death.

CAUTION

For most troubleshooting the cell should be removed from the Air Cleaner. A short in the cell will cause the power board to shutdown and the performance light will stay off. Unless otherwise directed remove the cell from the unit when testing.

The Air Cleaner when operating normally will have the fan running and the performance indicator light **ON**. If this is not the case the see the Troubleshooting Guide for probable causes and remedies.

WARNING

When performing LIVE tests in the power box **NEVER** touch any parts other then what are mentioned in the tests. Components carry dangerous voltages and extreme care must be taken.

Testing For High Voltage At Power Board

For the following test you will need to have the hinged cover open with the **collecting cell out of the unit**.

1. Remove the hinged cover and the cover panel to the power box. Push a screwdriver into the slot to defeat the interlock switch and turn the Air Cleaner **ON**.
2. With a long shafted screwdriver, with a plastic handle, short between the grounded side of the power box and the HV1 terminal of the power board.
3. If you draw a good spark, there is high voltage from the power board.

Measuring High Voltage At Power Board

A high voltage meter capable of measuring up to 10,000 VDC is required to test the voltage.

1. The Air Cleaner should be **ON** with the cell installed and the cell access door closed. The Air Cleaner should be on at least 5 minutes to allow voltage to stabilize.
2. Remove the hinged cover and the cover panel from power box.
3. Connect the ground of the high voltage meter to ground stud in the power box.
4. Turn the Air Cleaner **ON**, and defeat the interlock switch.
5. Check terminals HV1 and HV2 on the power board to determine if voltage is present. See Fig. 5 for values..
5. If no voltage is present, remove the cell from the Air Cleaner.
   a. Check the voltage at HV1 and HV2 again.
   b. If voltage is present, the problem is with the cell or the wiring to the copper contacts.
   c. Check the condition of the copper contacts and wiring.
   d. If the contacts are not bent and the wiring is OK, the problem is with the cell. See the Troubleshooting Guide for more information.
   e. If there is no voltage with the cell removed, check the power board, system switch and transformer to make sure that they are functioning correctly.
6. If there is voltage present, but the performance light does not come on, replace the light.
7. The high voltage can be adjusted with the potentiometer on the power board if required.

Replacing A Performance Light

Before replacing the performance light, turn **OFF** power to the Air Cleaner at the source.

1. Remove the cover and the power box cover panel.
2. Disconnect the performance light wiring connected to the neon lamp terminals (P5 and P6) on the power board. Carefully cut the wire ties from the wire bundle.
3. Push the light out through front of power box.
4. Push the new light into the power box.
5. Connect the wiring to the neon lamp terminals on the power board, P5 and P6. Route the wires away from the high voltage section of the power board.
6. Replace cover panel and close the cover.
7. Return power to Air Cleaner. Test light.

Replacing A Power Board

Before replacing the power board, turn **OFF** power to the Air Cleaner at the source.

1. Remove the cover and the power box cover panel.
2. Disconnect the wiring from the neon lamp, HV1, HV2 and 24 V terminals. Make note of position of wires.
3. Remove the hex nuts from the power board.
4. Remove the power board from the studs.
5. Place the new board onto studs with the 24 volt input close to the transformer.

6. Replace the hex nuts removed in Step 3. Ensure the star washer is in place over the nut at the ground location under the power board. For proper grounding the washer must be located under the power board.
7. Reconnect wiring to neon lamp, HV1, HV2, and 24 V terminals on the new power board. See Fig. 5.
8. Return power to Air Cleaner. Test power board.
9. Replace power box cover panel and close cover.

Note: The power board has been set before shipping. It is not usually necessary to reset the voltage to the new load. If you do need to adjust the voltage refer to Setting Voltage of Power Board section for more information.

Testing The 24 V Transformer

1. Remove the cover and cover panel to the power box.
2. Disconnect the leads of the 24 V transformer from the power board. See Fig. 5. Do not short the leads.
3. Push a screwdriver into the slot to defeat the interlock switch and turn the Air Cleaner **ON**.
4. Measure the voltage across the leads with a voltmeter. Voltage should read 25 - 28 VAC.
5. If no voltage is present, check the voltage from the system switch.
6. If there is voltage to the transformer but no output, replace the transformer.

Replacing The 24 V Transformer

Before replacing the transformer, check the resistance across the power board 24 V input terminals, without the transformer connected. Resistance should read above 20K ohms with an analog meter and above 4M ohms with a digital meter. If the resistance readings are below these values, the power board may be the cause of the transformer failure.

Before replacing the 24 V transformer, turn **OFF** the power to the Air Cleaner at the source.

1. Remove the cover and power box cover panel.
2. Disconnect the secondary leads from the transformer to the 24 V terminals on the power board. See Fig. 5.
3. Remove the black primary lead from the system switch. Remove the wire nut from the other primary lead.
4. Remove the 2 hex head nuts and washers from the transformer studs.
5. Remove the transformer.
6. Place new transformer over studs and re-install the hex head nuts and washers to secure into place.
7. Connect the secondary leads (white) to the 24 V terminals on the power board (P1 & P2).
8. Place one black lead on the system switch terminal.
9. Place the other black lead with the two white leads from the terminal block and connect with the wire nut you removed earlier.
10. Replace power box cover panel and close cover.
11. Turn **ON** the power to the Air Cleaner and test.

Setting Voltage Of Power Board

Voltage on the power board may drop below required level when the installation area is too damp, too cold or the input power to the unit is low. Voltage on power board may be too high when the installation area is too dry or too hot or the input power to the unit is high. By adjusting the HV Adj. potentiometer, the voltage can be set to optimum level. A high voltage meter capable of measuring 10,000 VDC is required. To test and adjust voltage level, perform the following procedure:

1. Turn the Air Cleaner **ON** and wait 5 minutes before checking voltage to allow voltage on cell to stabilize.
2. Turn the Air Cleaner **OFF**, with the cell in the unit.
3. Remove cover and the power box cover panel.
4. Connect the ground of the high voltage meter to the ground stud in the power box.
5. Turn the Air Cleaner **ON** and defeat interlock switch.
6. Measure the voltage at HV1 and HV2 on the power board.
7. Adjust the HV Adj. potentiometer until the voltage reading matches the voltage in Fig. 5. Adjusting the potentiometer **clockwise decreases** the voltage and turning **counter-clockwise increases** the voltage.
8. Turn **OFF** the Air Cleaner.
9. Remove the high voltage meter.
10. Replace the power box cover panel and close cover.
11. Turn **ON** the Air Cleaner.

Setting Approximate Voltage Without High Voltage Meter

A high voltage meter should be used to set the high voltage. If one is not available, this method can be used. This will only set an approximate voltage. After using this method, the voltage should be reset with a high voltage meter as soon as possible.

1. Remove power box cover panel, with the cell in the unit.
2. Turn the HV Adj. potentiometer fully counter-clockwise. The Air Cleaner may arc or snap at this point.
3. Turn the HV Adj. potentiometer clockwise approximately a quarter turn.
4. Replace power box cover panel and close cover.

Testing For Voltage At The Cell

1. Remove the cover and power box cover panel.
2. The cell must be in the Air Cleaner for this test.
3. Turn the Air Cleaner **ON** and defeat the safety interlock switch.
4. Place a plastic handled screwdriver into the direction arrow slot. Do not apply excessive force.
5. If there is a good snap then there is high voltage at the cell.

Testing Cell For Bad Contacts

1. Remove the cover and power box cover panel.
2. The cell must be in the Air Cleaner for this test.
3. Turn the Air Cleaner **ON** and defeat the safety interlock switch.
4. Place a plastic handled screwdriver into the direction arrow slot. Do not apply excessive force.
5. There should be an initial snap when the plates are shorted, then no sound. If a hissing occurs, then there is a bad contact. Look along the top of the cell, with the short still in place. If there is a small arc between the cell top and copper contact, then that is the bad contact. Pull the cell out and gently pull the copper contact down.
6. If an arc is not seen and there is a bad contact, then the problem may be an internal contact in the cell.

See below for additional testing.

Testing Cell With An Ohmmeter

To test the cell for a dead short or a bad contact an ohmmeter can be used. **Always discharge the cell with a screw driver before testing with an ohmmeter.**

1. With the ohmmeter set on its lowest scale take a reading between the top center contact of the cell and the ionizing fingers on the bottom of the cell. You should have continuity. If you do not then there is a bad contact between the center contact and the top set of ionizing fingers.
2. Test the resistance between the top center contact and the cell frame. You should read infinite resistance. If not you have a short in the ionizing section.
3. Take a reading between the two outside contacts on the top of the cell. You should have continuity. If you do not then there is a bad contact between one of the contacts to the live cell plate. Test each top outside contact to the last plate in the cell to determine which contact is not mating properly.
4. Test the resistance between the outside contacts and the cell frame. You should read infinite resistance. If not you have a short in the collecting section.

Replacing A Tungsten Ionizing Wire

Replacement wires are cut to the correct length and have eyelets at each end for easy replacement.

1. Turn **OFF** power to Air Cleaner.
2. Remove cell from Air Cleaner.
3. Remove all parts of broken wire from the cell. If necessary, the cell may be used temporarily with one wire missing until a replacement is received.
4. Place one end of the loop over the finger at the bottom of the cell.
5. Using needle-nose pliers, grip the other end of wire, near the bottom of the top loop. Pull the wire up toward the top finger. As you apply tension, the bottom finger will give, allowing the placement of the loop around the top finger.
6. Install cell in Air Cleaner.
7. Return power to Air Cleaner.
8. Test cell for proper operation.

Replacing A Fan Motor

1. Turn **OFF** power to Air Cleaner at the source.
2. Open the cover and remove cells and prefilters from Air Cleaner.
3. Remove the fan blade from the motor shaft.
4. Remove the cover and power box cover panel. Disconnect the four motor wires from the terminal block. Gently pull the wires up into the motor compartment.
5. Remove the four hex nuts holding the motor plate to the cabinet. Remove the motor and plate.
6. Remove the four hex nuts from the back of the motor plate to release the motor.
7. Replace the isolator rubbers on the motor plate.
8. Attach the new motor to the motor plate with a flat washer on both sides of the rubber isolator. Place the motor plate into the cabinet with the wires toward the plastic bushing to allow the wires to be feed to the power box.
9. Secure the motor plate to the cabinet.
10. Feed the motor wires down through the plastic bushing and secure to the terminal block.
    - #3 - White
    - #4 - Red
    - #5 - Yellow
    - #6 - Black

    The white wire on units with a remote switch control use a wire nut instead of terminal #3.
11. Reinstall the fan blade, cell and prefilter.
12. Replace the power box cover panel and close the cover.
13. Turn **ON** the Air Cleaner and test the motor on all speeds.

REMOTE SWITCH CONTROL

The remote switch control, if ordered with the unit, has two switches which control power to the unit and control the speed of the motor. The remote switch control cannot be added to a non-remote unit.

The switch control can be mounted in a convenient location and wired back to the unit to control the functions. The control box has holes on the back for mounting and knockouts on five sides for the electrical wires to be attached. A terminal block is mounted inside the box to facilitate wiring.

Run an approved seven wire cable between the control box and the unit. Refer to Fig. 6 for wiring connections between the control and the unit. Both the remote box and the unit must be grounded for proper and safe operation.

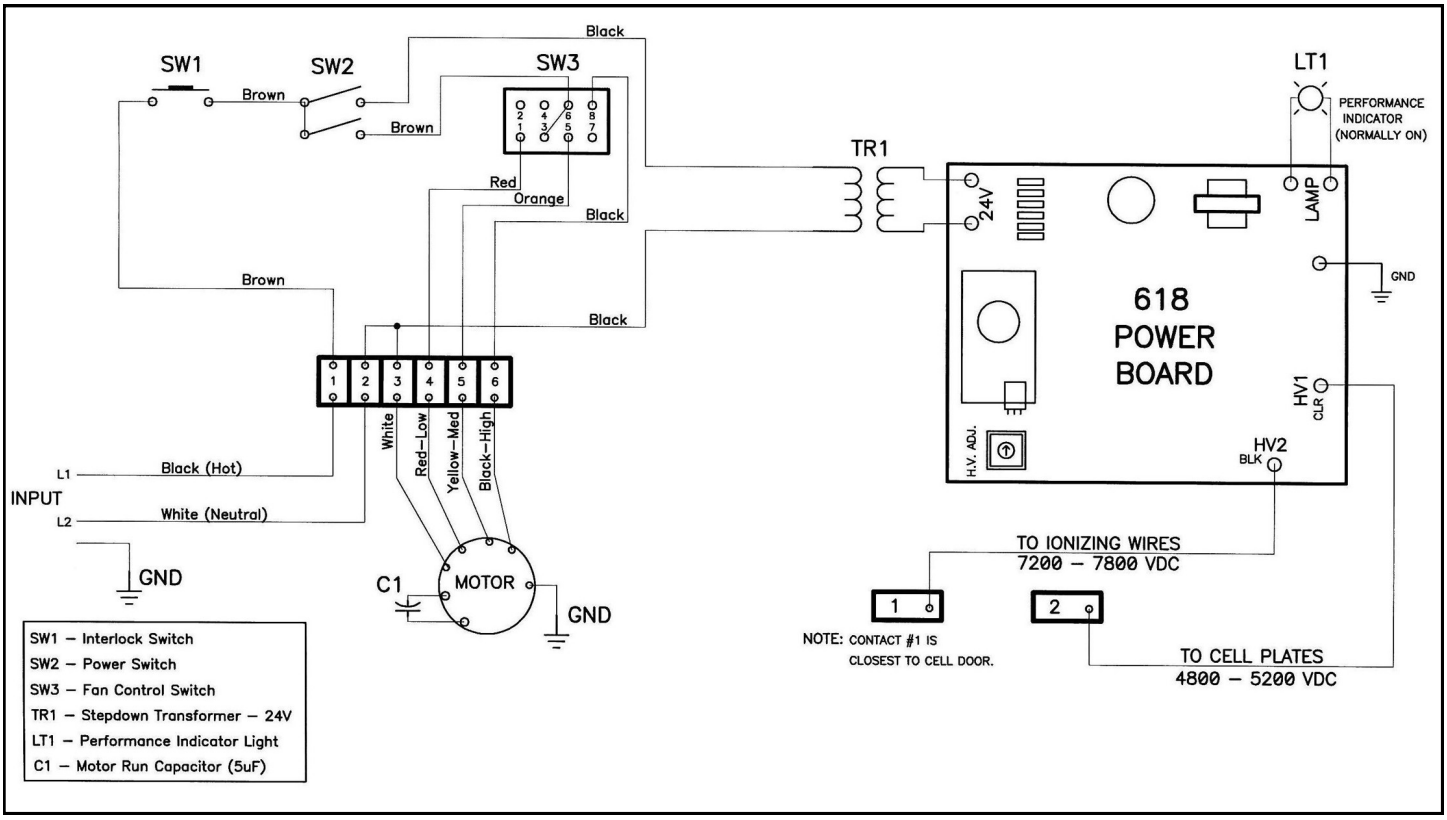

Fig. 5 — Electrical Schematic - 120 Volt

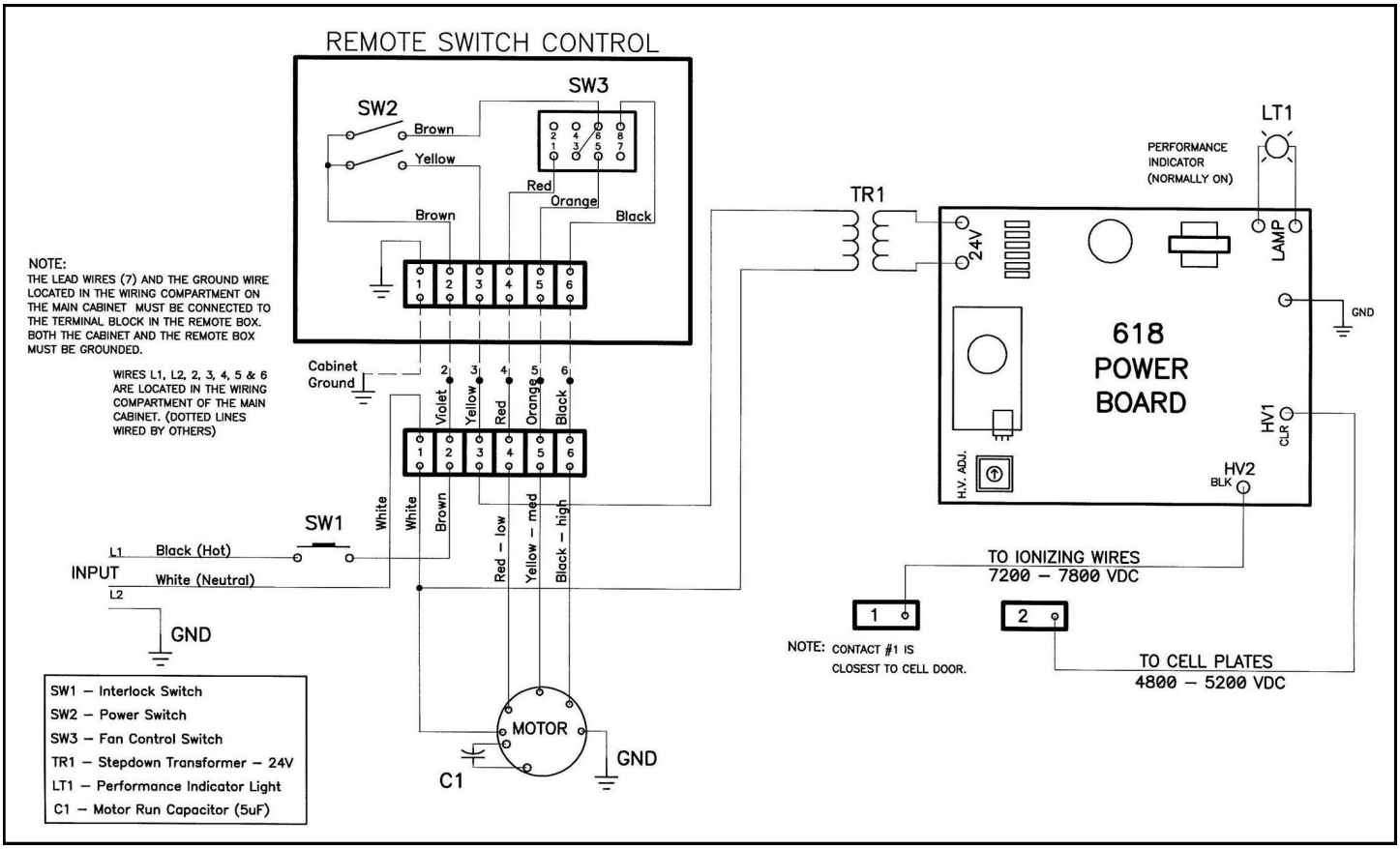

Fig. 6 — Electrical Schematic - With Wired Remote - 120 Volt

Table 1 — TROUBLESHOOTING GUIDE

PROBLEM	PROBABLE CAUSE	REMEDY
Unit does not function correctly. Power switch ON and performance indicator light and motor are OFF.	Main breaker or fuse.	Check breaker or fuse and reset or replace if necessary.
	Remote switch off.	If equipped with a remote switch ensure it is turned on.
	Wiring or plug improperly connected.	Check wiring or if plug is inserted and receptacle is powered.
	Cover not closed.	Close cover and latches locked in place.
	Defective power switch.	Check power switch for continuity with ohmmeter. Replace if defective.
	Defective safety interlock.	Open cover and press safety interlock with a screwdriver. If lights come on, check if interlock bracket is bent.
Unit does not function correctly. Power switch is ON, motor is operating and performance indicator light is OFF.	Short in cell due to: 1. Broken ionizing wire. 2. Large particles wedged between cell plates. 3. Cell washed recently and are still wet. 4. Cell end plate insulator is dirty or damaged. 5. Cell plates are bent.	1. Remove wire or wire fragments. Replace. 2. Shake large particles out or wash cell. 3. Allow cell to dry completely. 4. Clean or replace end plate insulator. 5. Straighten plates with pliers.
	Defective performance indicator light.	Determine whether high voltage is present by testing power board. If voltage is present, replace indicator light.
	Defective power board. (Check power board with cells removed)	Adjust high voltage potentiometer on power board counter-clockwise. If high voltage is not present check transformer and switches. Replace power board if 24 V is present to power board.
	Off board 24 V transformer is not working.	Verify output of transformer. Replace if necessary.
	Defective power switch.	Verify output of switch. Replace if necessary.
Unit does not function correctly. Power switch is ON, motor is not operating and performance indicator light is ON.	Defective power switch.	Check power switch for continuity with ohmmeter. Replace if defective.
	Defective speed selector switch.	Check switch for continuity with ohmmeter. Replace if defective.
	Defective fan motor.	Test motor and replace if defective.
Cell makes loud hissing noise or causes radio interference.	Internal cell contacts are not touching plates.	Test contacts and repair.
	High voltage copper contacts not making good connection on cell.	With needle-nose pliers, gently pull contacts down or replace contacts.
Cell arcing excessively (performance indicator light ON or flashing).	Cell wet from washing.	Allow cell to dry completely.
	Particles lodged in cell or broken ionizing wire.	Wash cell. Shake particle out of cell. Replace wire, if necessary.
	Cell plates are bent.	Remove cell and adjust to original spacing using needle-nose pliers.
	Voltage is too high.	Adjust high voltage potentiometer on power board clockwise.
	High voltage wires are on wrong copper contact.	Reposition high voltage wires on proper contact (see Fig. 5).
	Internal contact on cell out of alignment.	Realign cell contact.
Cell arcing excessively at top of cell near copper contacts (power light and performance indicator light ON).	Copper contact on high voltage contact board is broken or bent upward.	If possible, pull down contact with needle-nose pliers or replace contact.
Cell not collecting dirt (performance indicator light ON).	Arrow on cell not pointing towards fan motor.	Reposition cell handle and place cell in properly.
	Not enough voltage on collecting cell.	Adjust high voltage potentiometer counter-clockwise on power board.
Ozone odor	Cell plates are bent.	Straighten with needle-nose pliers.
	Loose or broken ionizing wire.	Replace wire.
	Dirty cell.	Wash cell.
	Incoming voltage is higher than 120 V.	Adjust high voltage potentiometer clockwise on power board.
	Air Cleaner is oversized for room.	Use correct size of Air Cleaner.
	Room is extremely dry.	Repair or install central humidifier.

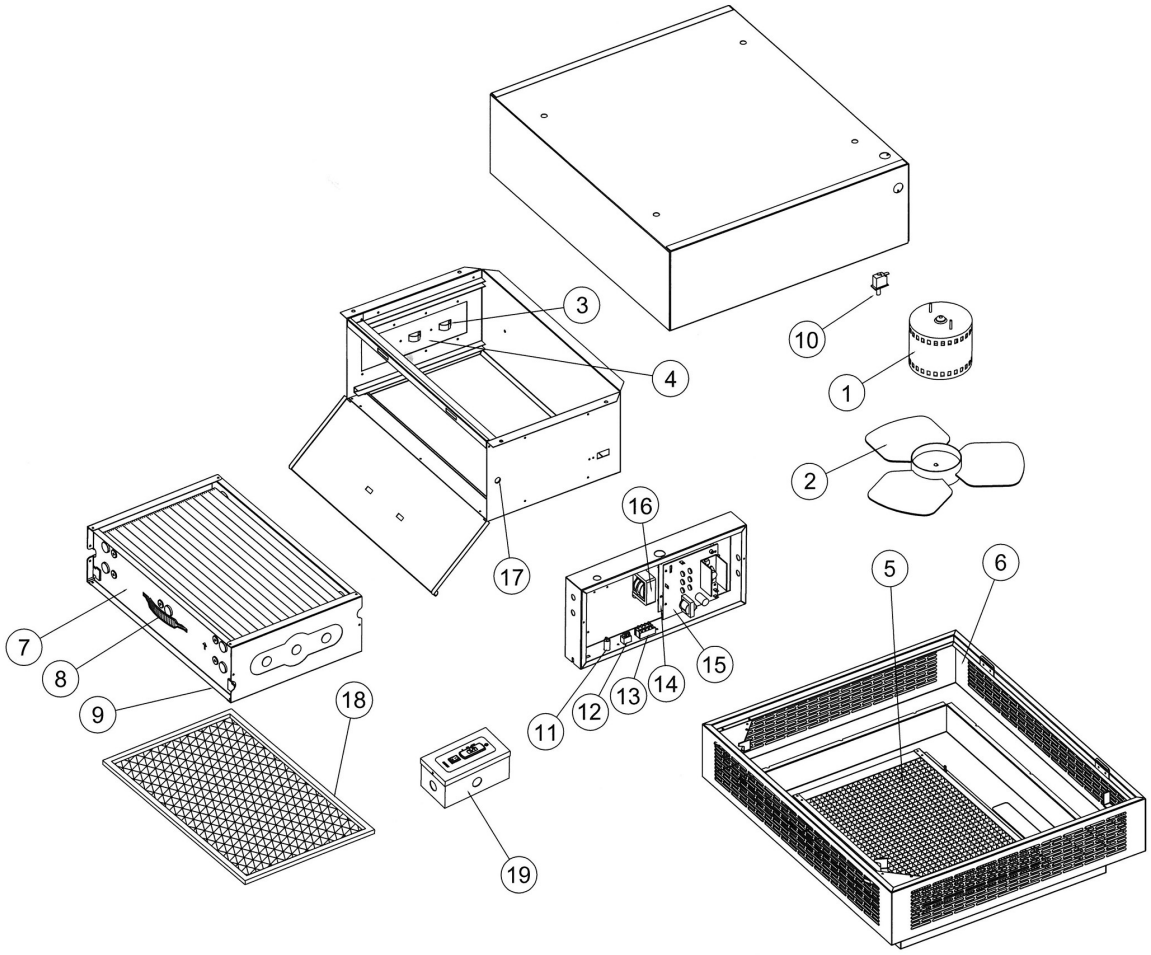

Fig. 7 — Exploded View and Parts List

#	Description	Part Number
1	Fan Motor	EACCM7-01
2	Fan Blade	EACCM7-02
3	Copper Contact	EAC14-08
4	Fibreboard (with 2 Copper Contacts)	EACCM7-04
5	Intake Grill	EACCM7-05
6	Cover Assembly (incl. Grill) (White)	EACCM7-06W
6a	Cover Assembly (incl. Grill) (Gray)	EACCM7-06G
7	Collecting Cell	EACCM7-07
8	Cell Handle	EAC14-16
9	Ionizing Wire	EAC20-19
10	Safety Interlock Switch	EACCM13-10
11	Red Indicator Light	EACCM13-11

#	Description	Part Number
12	Power Switch (Gray)	EACCM13-12W
12a	Power Switch (Black)	EACCM13-12G
13	3-Position Slide Switch (Gray)	EACCM13-13W
13a	3-Position Slide Switch (Black)	EACCM13-13G
14	Power Board Fibreboard	EACCM13-14
15	Power Board	EACCM13-15
16	24 Volt Transformer	EACCM13-16
17	Cell Guide	EAC14-14
18	Prefilter	EACCM13-18
19	Remote Switch Box	EACCM13-19
20	Door Label (Close Door Latch...)	EACCM13-20
21	Dax Detergent	9900

Use the diagram above to identify the part which is required. To order parts call the number listed below or call your local contractor.

General Filters, Inc.
43800 Grand River Ave.
Novi, Michigan 48375-1115
WWW.GENERALAire.COM
1-866-476-5101
248-476-5100

Canadian General Filters, Ltd.
39 Crockford Blvd.
Scarborough, Ontario
WWW.CGFPRODUCTS.COM
416-757-3691

Dimensions	Length	24 in	61.0 cm
	Width	28 in	71.0 cm
	Height	15 in	38.1 cm
Weight		70.0 lbs	32.0 kg
Input Voltage		120 V 60 Hz	
Power Consumption (maximum)		150 Watts	
Air Flow	Hi	712 CFM	1210 m^3/hr
	Medium	575 CFM	977 m^3/hr
	Low	440 CFM	748 m^3/hr
Motor		1/33 HP	

Table 2 — Technical Data

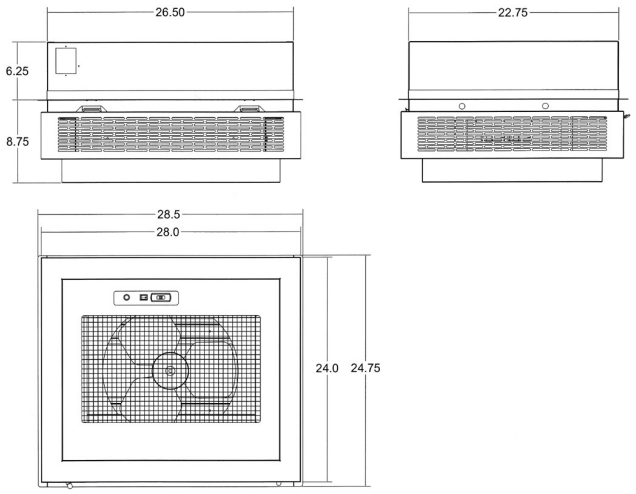

Fig. 8 — Dimensions

Notes

ELECTRONIC AIR CLEANER
LIMITED ONE YEAR WARRANTY

Electronic Air Cleaners, if properly registered by the return of the attached warranty registration to General Filters, Inc., are warranted to the consumer against defects in materials and workmanship for a period of one year from the date of installation, so long as the product has been installed and operated in accordance with all appropriate manuals and wiring diagrams. Replacement or routinely replaceable parts such as prefilters, are not covered by this limited warranty or any other warranties. Any other defective parts will be repaired without charge except for removal, reinstallation and transportation costs. To obtain repair service under this limited warranty, the consumer must send the defective part to General Filters, Inc.

THERE ARE NOT EXPRESS WARRANTIES COVERING THIS ELECTRONIC AIR CLEANER OTHER THAN AS SET FORTH ABOVE. THE IMPLIED WARRANTIES OF MERCHANTABILITY AND FITNESS FOR A PARTICULAR PURPOSE ARE EXPRESSLY EXCLUDED. THE MANUFACTURER ASSUMES NO LIABILITY IN CONNECTION WITH THE INSTALLATION OR USE OF THIS PRODUCT, EXCEPT AS STATED IN THE LIMITED WARRANTY. THE MANUFACTURER WILL IN NO EVENT BE LIABLE FOR INCIDENTAL OR CONSEQUENTIAL DAMAGES.

This limited warranty gives you specific legal rights, and you may also have other rights which vary from state to state. Some states do not allow either limitations on implied warranties, or exclusions from incidental or consequential damages, so the above exclusion and limitation may not apply to you.

Any questions pertaining to this limited warranty should be addressed to General Filters, Inc. General Filters, Inc. has elected not to make available the informal dispute settlement mechanism which is specified in the Magnuson-Moss Warranty Act.

Agency:

Form 14463

General Filters, Inc.
43800 Grand River Ave.
Novi, Michigan 48375-1115
WWW.GENERALAire.COM

Canadian General Filters, Ltd.
39 Crockford Blvd.
Scarborough, Ontario
WWW.CGFPRODUCTS.COM

CGF PRODUCTS

Technical Support 1-800-267-8305

eaccm7-1.pub
08/10