This Owner's Manual is provided and hosted by Appliance Factory Parts.

Appliance Factory Parts
Experts in BBQ, Humidifier, & Appliance Parts
1-800-955-7075

Kenmore 721.89652.590 Owner's Manual

Shop genuine replacement parts for Kenmore 721.89652.590

DOOR PARTS

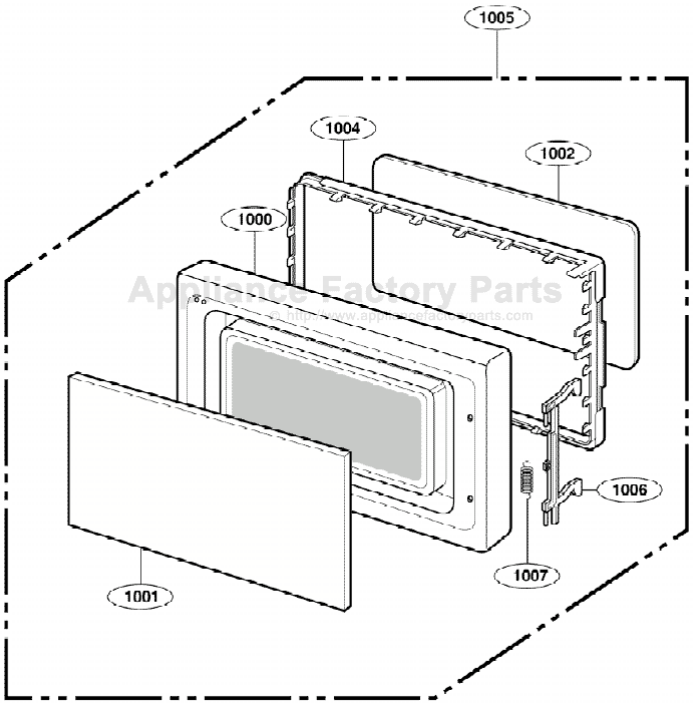

Find Your Kenmore Microwave Parts - Select From 532 Models

-------- Manual continues below --------

#EV#

EXPLODED VIEW

INTRODUCTION

For Model : 721.89652.590

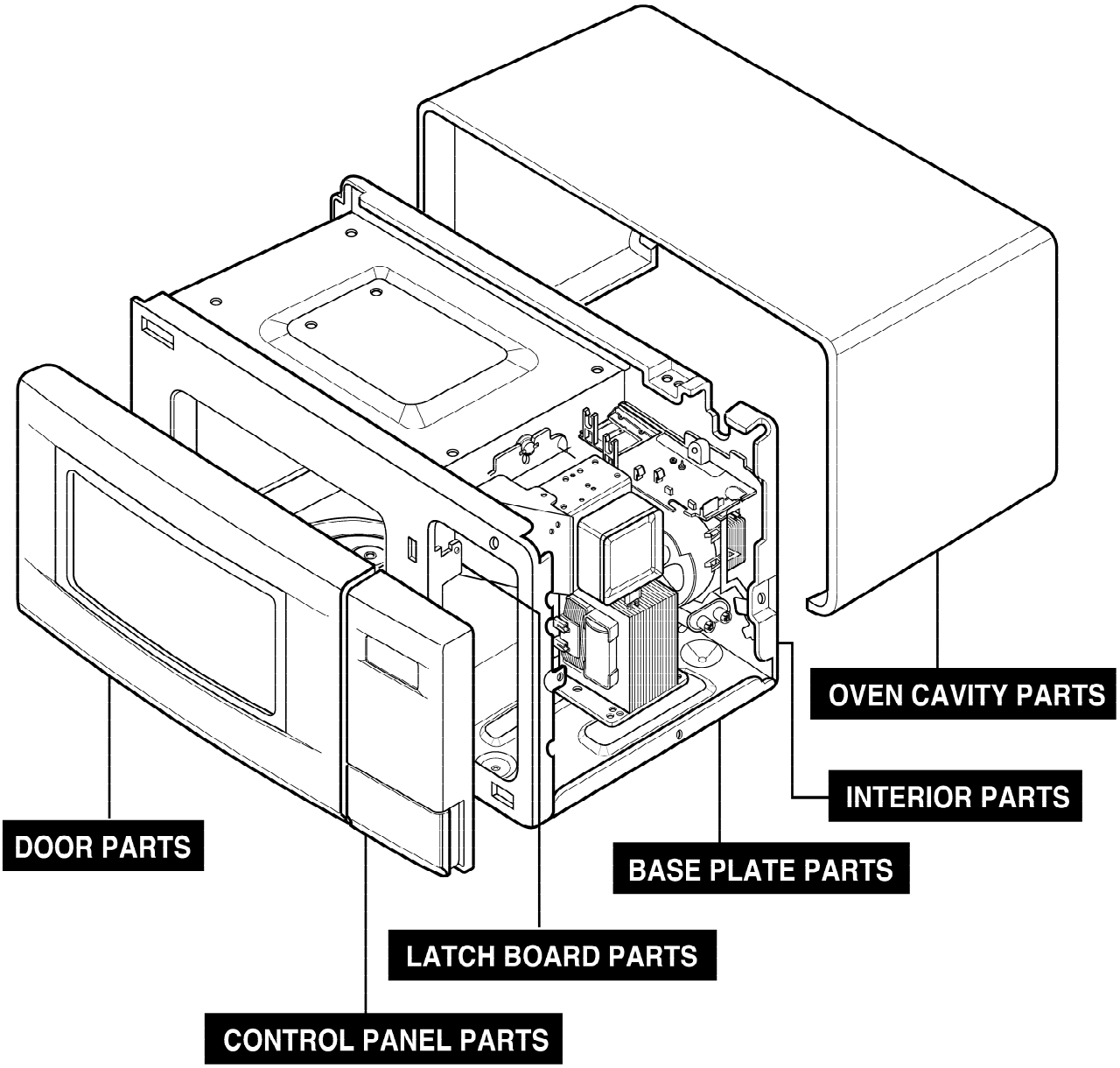

P/NO:3828W5S6302

DOOR PARTS

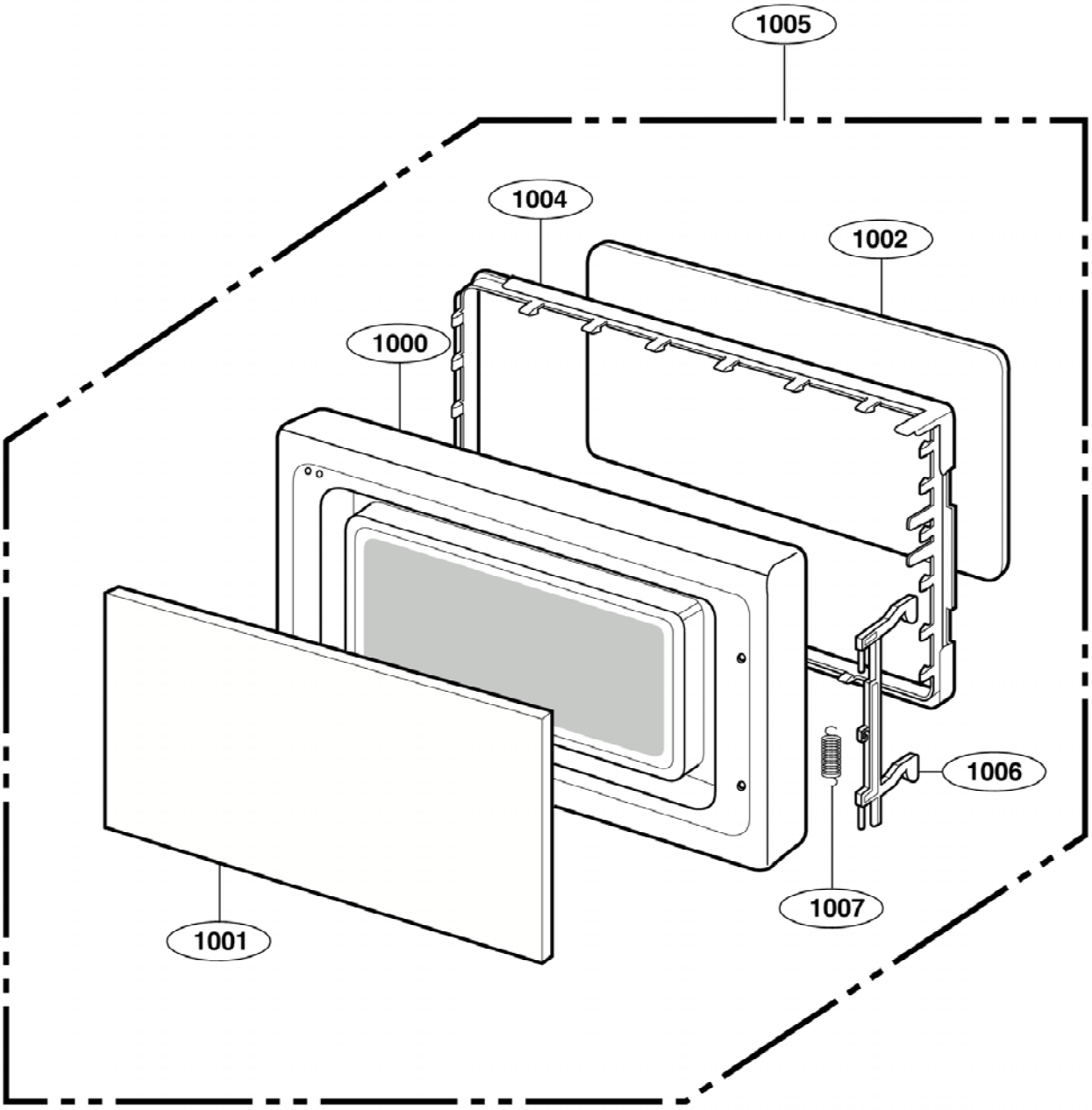

CONTROLLER PARTS

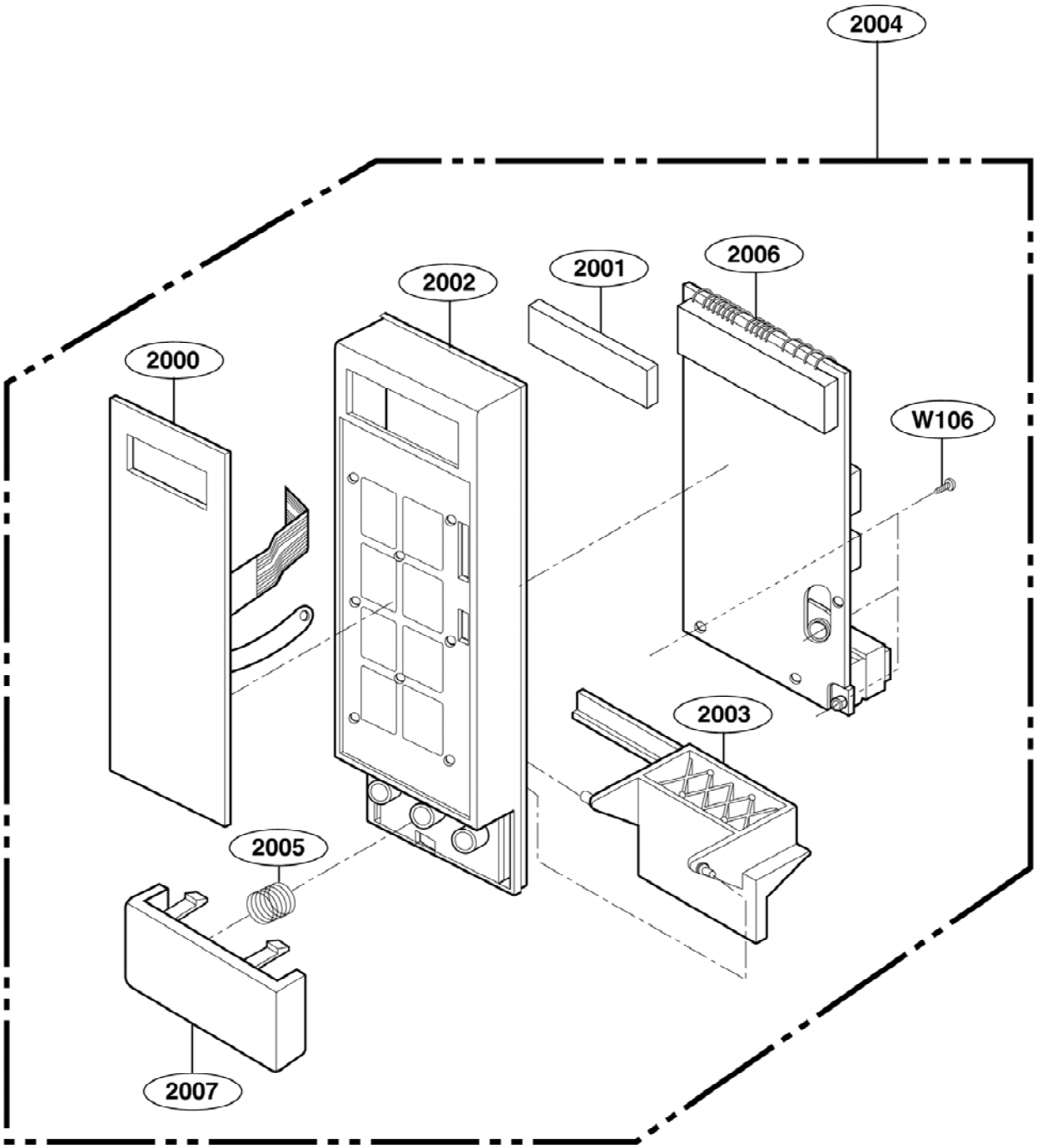

OVEN CAVITY PARTS

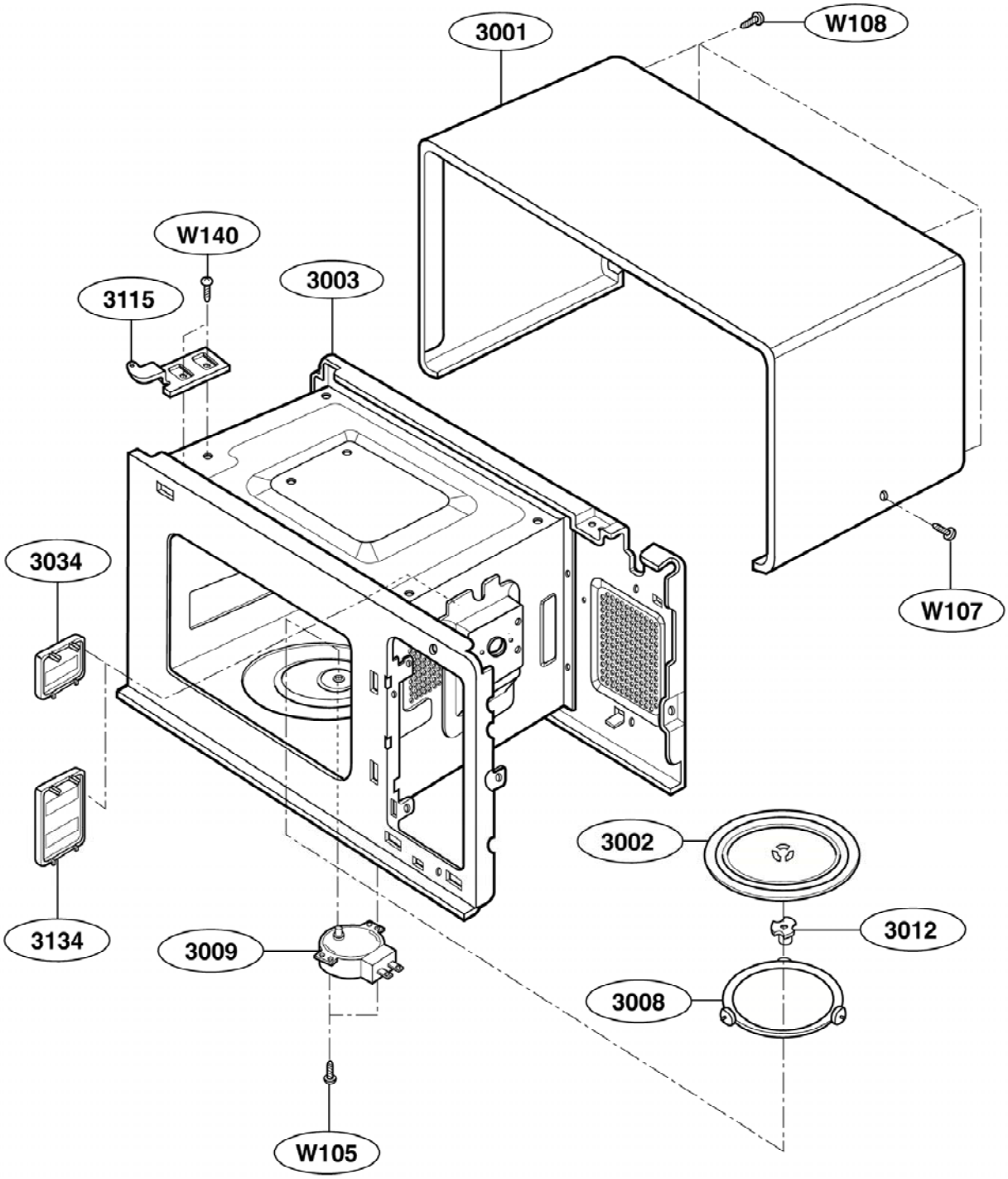

LATCH BOARD PARTS

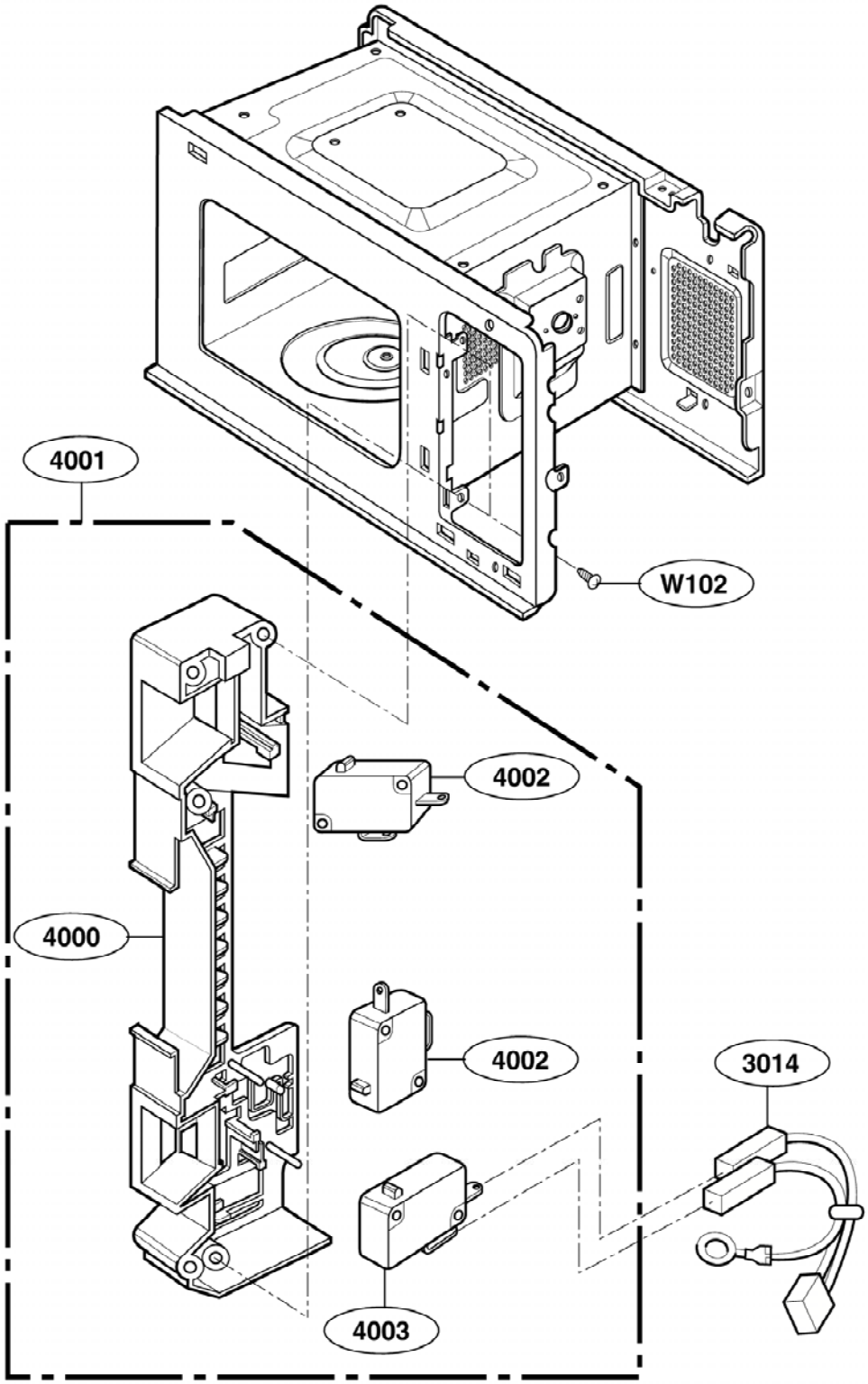

INTERIOR PARTS

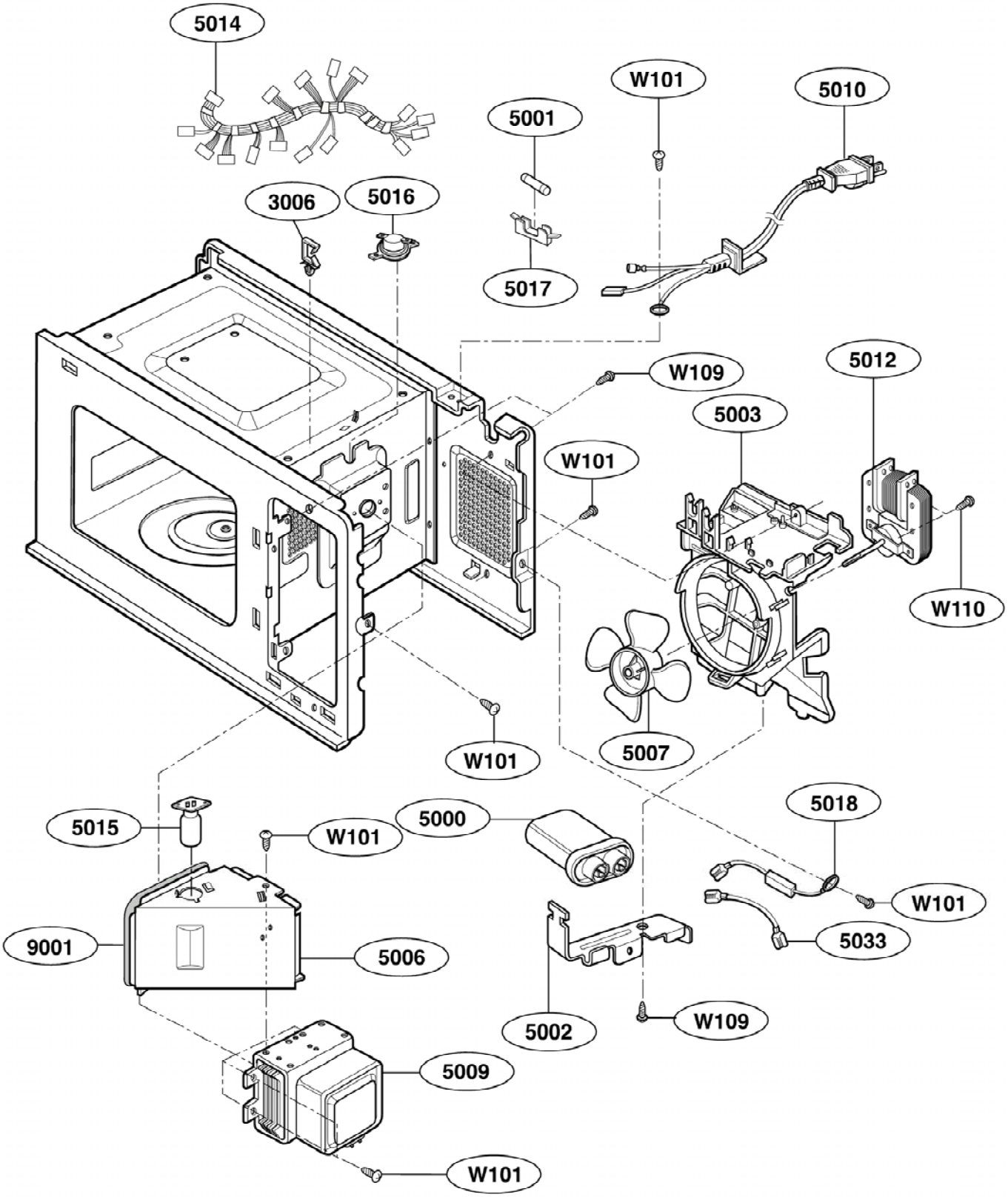

BASE PLATE PARTS

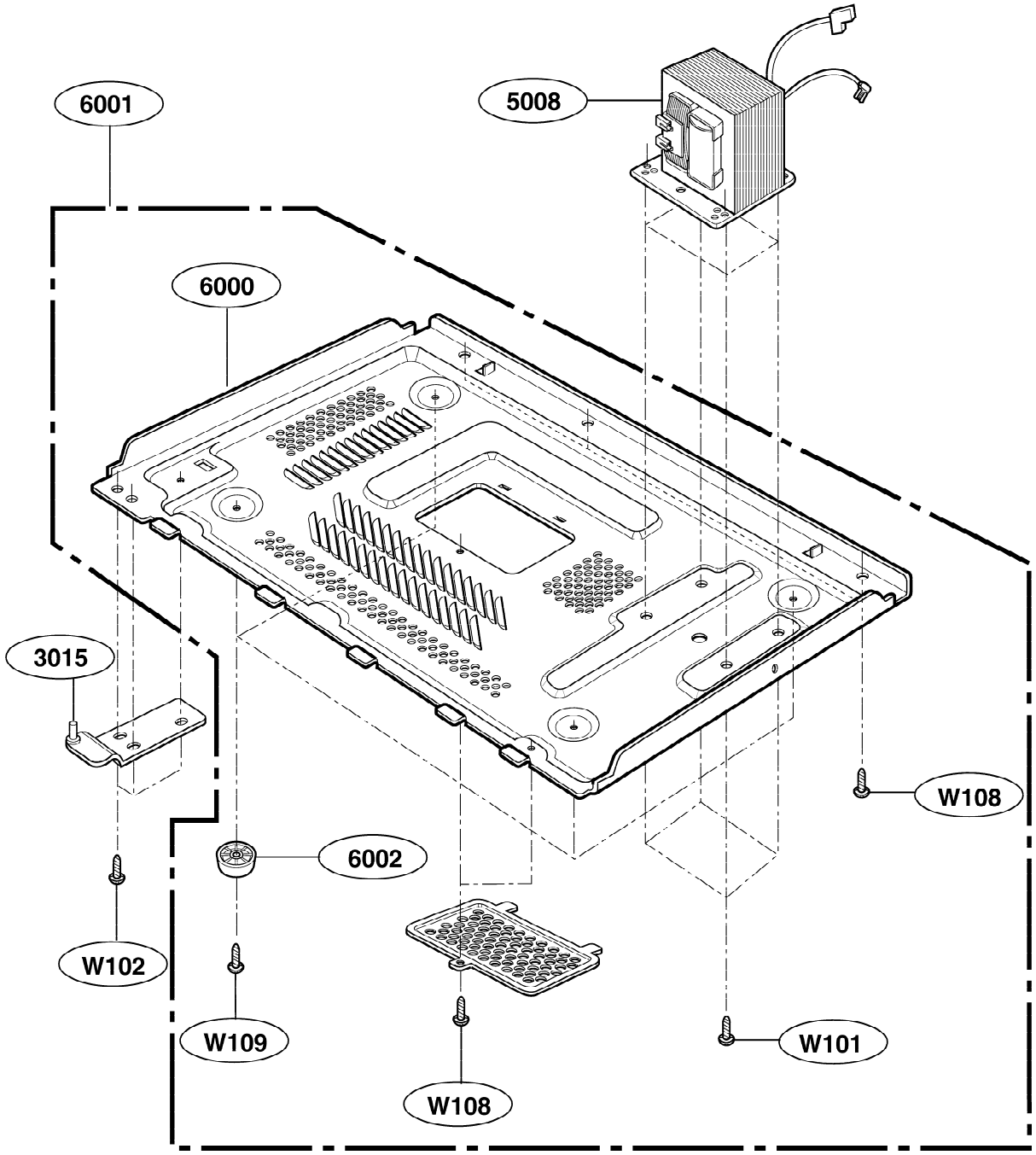

Part Reference list (1.5 Cuft)

Rev.1 Dec 07, 2005

Location No.	721.89652.590 PART NO	Part Name	SVC	Alternate
*01	3874W500979	MANUAL,OWNERS	R	
*02	3836W500851	MANUAL,SERVICE	R	
*07	3858W3T006T	CARD,TECHNICAL	R	
*10	3890W2ZC23C	BOX	R	
1000	3213W1A007H	DOOR FRAME ASSEMBLY	R	
1001	3352W1A035J	FRONT SCREEN	R	
1002	2B72504X	SEAL TAPE	R	
1004	3552W1A009A	CHOKE COVER	R	
1005	3581W1A053H	DOOR ASSEMBLY	R	
1006	4026W3A027A	LATCH	R	
1007	4970WRA001B	SPRING	R	
2000	6638W2YB74A	KEY MEMBRANE	R	
2001	3550W4A029A	COVER,DIGITRON	R	
2002	3572W1A056C	PANEL,CONTROL	R	
2003	4510WRA002A	LEVER	R	
2004	4781W1M040H	CONTROLLER ASSEMBLY,KEY PAD	R	
2005	4B72023A	SPRING	R	
2006	5247W2YJ81H	PWB(PCB) ASSEMBLY,SUB	R	5247W2YS81H
2007	5020W2G065C	BUTTON	R	
3001	3112W0U010J	OUT CASE,U-BENDING	R	
3003	3461W0A016B	CAVITY ASSEMBLY	R	
3006	4B72944A	HOLDER,WIRE	R	
3002	1B71725A	TRAY,GLASS	R	
3008	5889W2A005M	ROTATING RING ASSEMBLY	R	
3009	6549WRS001G	MOTOR(CIRC),SYNCHRONOUS	R	
3012	4370WRT001C	SHAFT,TURN TABLE	R	
3014	6877W3T080E	HARNESS	R	
3015	4775W3P005B	HINGE ASSEMBLY	R	
3034	3052W2A020A	CANOPY,RESIN	R	
3115	4774W3P010A	BRACKET,HINGE	R	
3134	3052W2A017A	CANOPY,RESIN	R	
4000	3500W1A004A	BOARD,LATCH	R	
4001	3501W1A003A	BOARD ASSEMBLY,LATCH	R	
4002	3B73362F	SWITCH,MICRO	R	3B73362E
4003	3B73361E	SWITCH,MICRO	R	3B73361D
4009	3B73362H	SWITCH,MICRO	R	3B73362A
5000	0CZZW1H004B	CAPACITOR,DRAWING[HIGH VOLTAGE]	R	0CZZW1H002H
5000	0CZZW1H004B	CAPACITOR,DRAWING[HIGH VOLTAGE]	R	0CZZW1H003H
5001	3B74133K	FUSE,DRAWING	R	3B74133H
5002	4810W4C003A	BRACKET,CAPACITOR	R	
5003	4974W1S010A	GUIDE,SUCTION	R	
5006	5262W2A020A	DUCT	R	
5007	2B72125B	FAN	R	
5008	6010W2H068A	TRANSFORMER,HIGH VOLTAGE	R	
5009	6324W1A001B	MAGNETRON	R	
5010	6411W2A001D	POWER CORD ASSEMBLY	R	
5012	2B73670B	MOTOR(CIRC),FAN	R	
5014	6877W1T157B	HARNESS	R	
5015	6912W3B002G	LAMP,DRAWING	R	6912W3B002L
5015	6912W3B002G	LAMP,DRAWING	R	6912W3B002Q
5016	6930WRT001C	THERMOSTAT	R	
5017	4930W3B005A	FUSE HOLDER	R	3B72494A
5018	6021W3B001E	CABLE ASSEMBLY	R	

Location No.	721.89652.590 PART NO	Part Name	SVC	Alternate
5033	6861W3A001B	CABLE ASSEMBLY	R	
6000	3302W0A010A	BASE PLATE	R	
6001	3303W1A010A	BASE PLATE ASSEMBLY	R	
6002	4B73900A	LEG	R	
9001	3B72244T	CUSHION	R	
W101	1SBF0402418	SCREW TAP TITE(S),BINDING HEAD	R	
W102	4B70188C	SCREW,DRAWING	R	
W105	1TPL0402418	SCREW TAPPING,PAN HEAD	R	
W106	1TPL0402818	SCREW TAPPING,PAN HEAD	R	
W107	1TTL0402416	SCREW TAPPING,TRUSS HEAD	R	
W108	1TTL0402418	SCREW TAPPING,TRUSS HEAD	R	
W109	1TTL0402818	SCREW TAPPING,TRUSS HEAD	R	
W110	1TTL0403818	SCREW TAPPING,TRUSS HEAD	R	
W130	1TPL0402618	SCREW TAPPING,PAN HEAD	R	
W140	4000W4A003A	SCREW,DRAWING	R	