This Owner's Manual is provided and hosted by Appliance Factory Parts.

Appliance Factory Parts
Experts in BBQ, Humidifier, & Appliance Parts
1-800-955-7075

FRIEDRICH MR09C1F Owner's Manual

Shop genuine replacement parts for FRIEDRICH MR09C1F

Find Your FRIEDRICH Air Conditioner Parts - Select From 1575 Models

-------- Manual continues below --------

Friedrich®

SPLIT TYPE ROOM AIR CONDITIONER

WALL MOUNTED type

SERVICE MANUAL

Models

Indoor unit	Outdoor unit
MW09C1F	MR09C1F
MW12C1F	MR12C1F

CONTENTS

SPECIFICATIONS 1
OUTLINE AND DIMENSIONS 2
REFRIGERANT SYSTEM DIAGRAM 3
CIRCUIT DIAGRAM 4
INDOOR PCB CIRCUIT DIAGRAM 5
DISASSEMBLY ILLUSTRATION 10
PARTS LIST 13

SPECIFICATIONS

INDOOR UNIT	MW09C1F	MW12C1F
OUTDOOR UNIT	MR09C1F	MR12C1F
COOLING CAPACITY	9,700 BTU/hr	12,300 BTU/hr

ELECTRICAL DATA

POWER SOURCE	115 V	115 V
FREQUENCY	60 Hz	60 Hz
RUNNING CURRENT	7.6 A	9.8 A
INPUT WATTS	820 W	1,060 W
SEER	14.3	13.5
MOISTURE REMOVAL	2.1 Pts/hr (1.0 L/hr)	3.2 Pts/hr (1.5 L/hr)
AIR CIRCULATION-HIGH	560 m^3/hr	660 m^3/hr

COMPRESSOR

TYPE		Hermetic type, Permanent split condenser, 2 pole, Single phase, Induction motor	
DISCRIMINATION		EA89X1C-1FZDU1	EA118X1C-1FZDU1
POWER SOURCE		115V 60Hz	115V 60Hz
REFRIGERANT	R-410A	1 lb.9 oz (700 g)	2 lb. 2 oz (950 g)

FAN MOTOR

POWER SOURCE		115 V	115 V
INDOOR UNIT	HIGH	1,250 r.p.m.	1,450 r.p.m.
	MED	1,100 r.p.m.	1,250 r.p.m.
	LOW	950 r.p.m.	1,050 r.p.m.
	QUIET	800 r.p.m.	850 r.p.m.
OUTDOOR UNIT		640 r.p.m.	770 r.p.m.

DIMENSIONS

INDOOR UNIT	H x W x D	10-13/16 x 31-1/8 x 9-7/16 inch
		275 x 790 x 215 mm
OUTDOOR UNIT	H x W x D	21-1/4 x 31-1/8 x 11-7/16 inch
		540 x 790 x 290 mm

WEIGHT

INDOOR UNIT	Gross / Net	26 / 20 lbs. (12 / 9 kg)	
OUTDOOR UNIT	Gross / Net	77 / 68 lbs. (35 / 31 kg)	86 / 77 lbs. (39 / 35 kg)

OUTLINE AND DIMENSIONS

Unit : inch (mm)

Models :
MW09C1F / MR09C1F
MW12C1F / MR12C1F

INDOOR UNIT

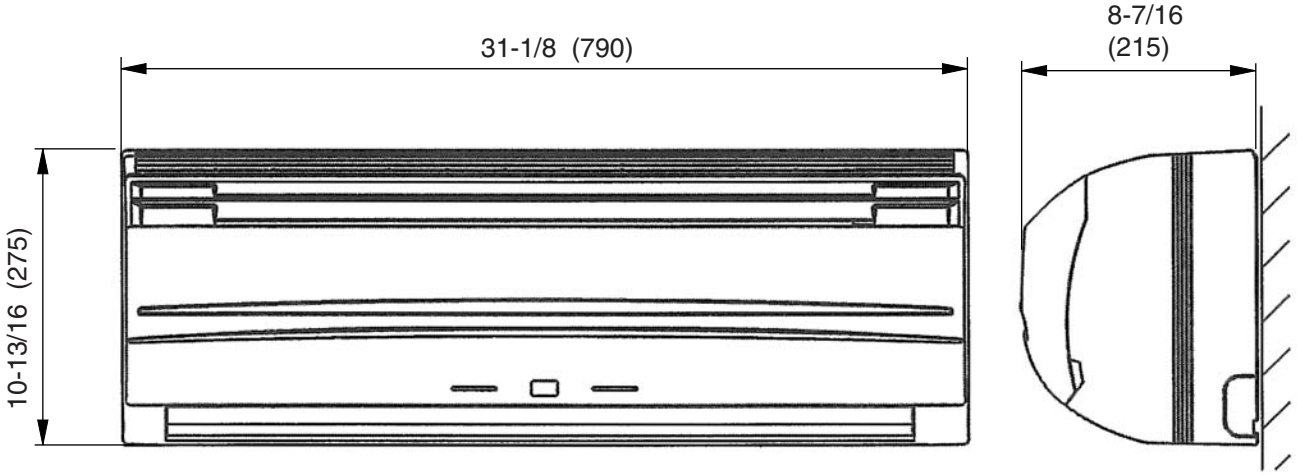

OUTDOOR UNIT

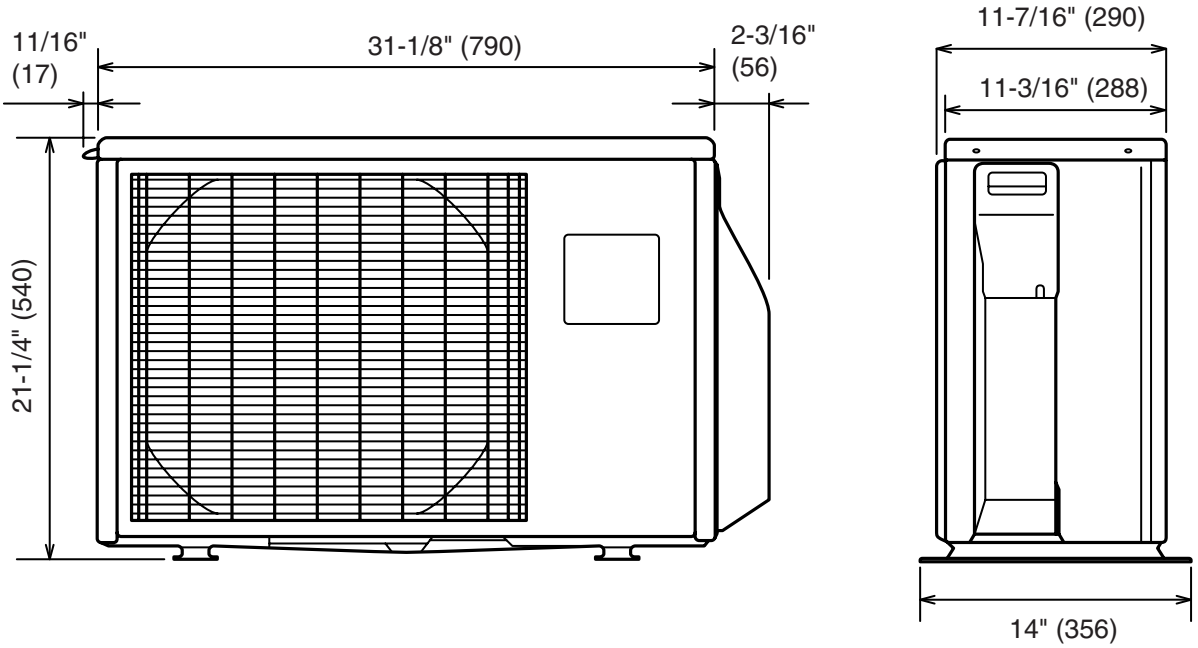

REFRIGERANT SYSTEM DIAGRAM

Models :
MW09C1F / MR09C1F
MW12C1F / MR12C1F

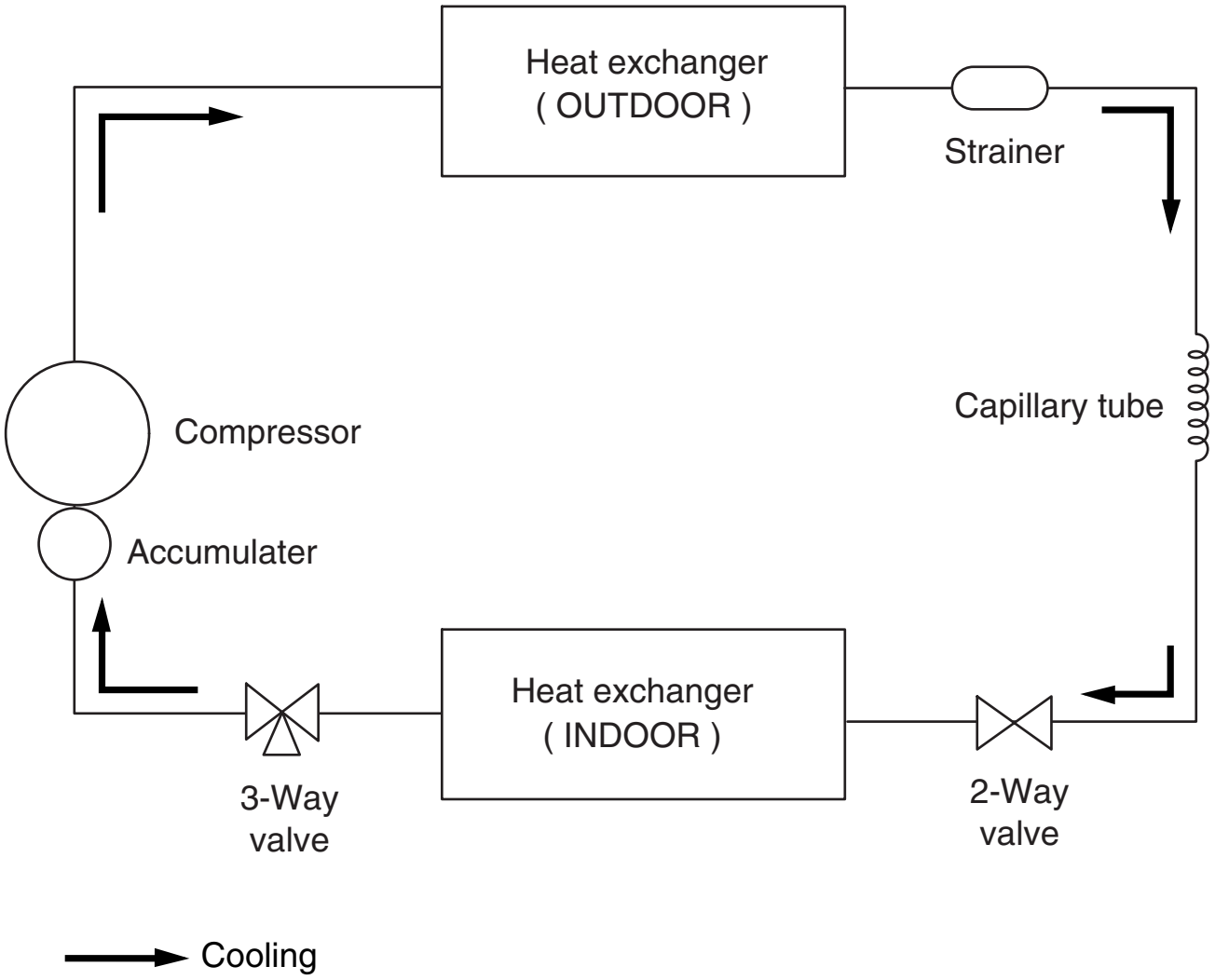

CIRCUIT DIAGRAM

Models :
MW09C1F / MR09C1F
MW12C1F / MR12C1F

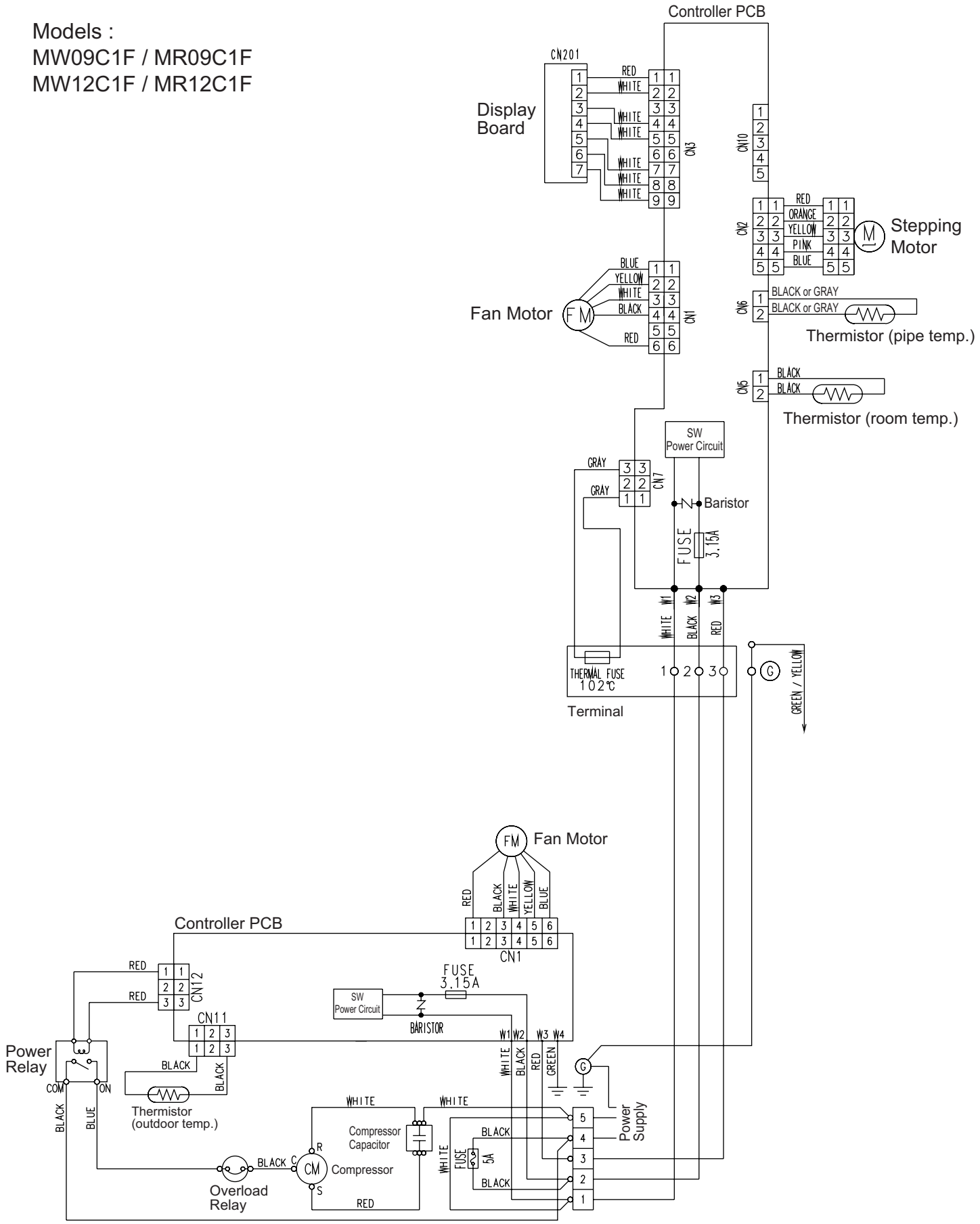

INDOOR PCIRCUITB CIRCUIT DIAGRAM

Models :
MW09C1F, MW12C1F

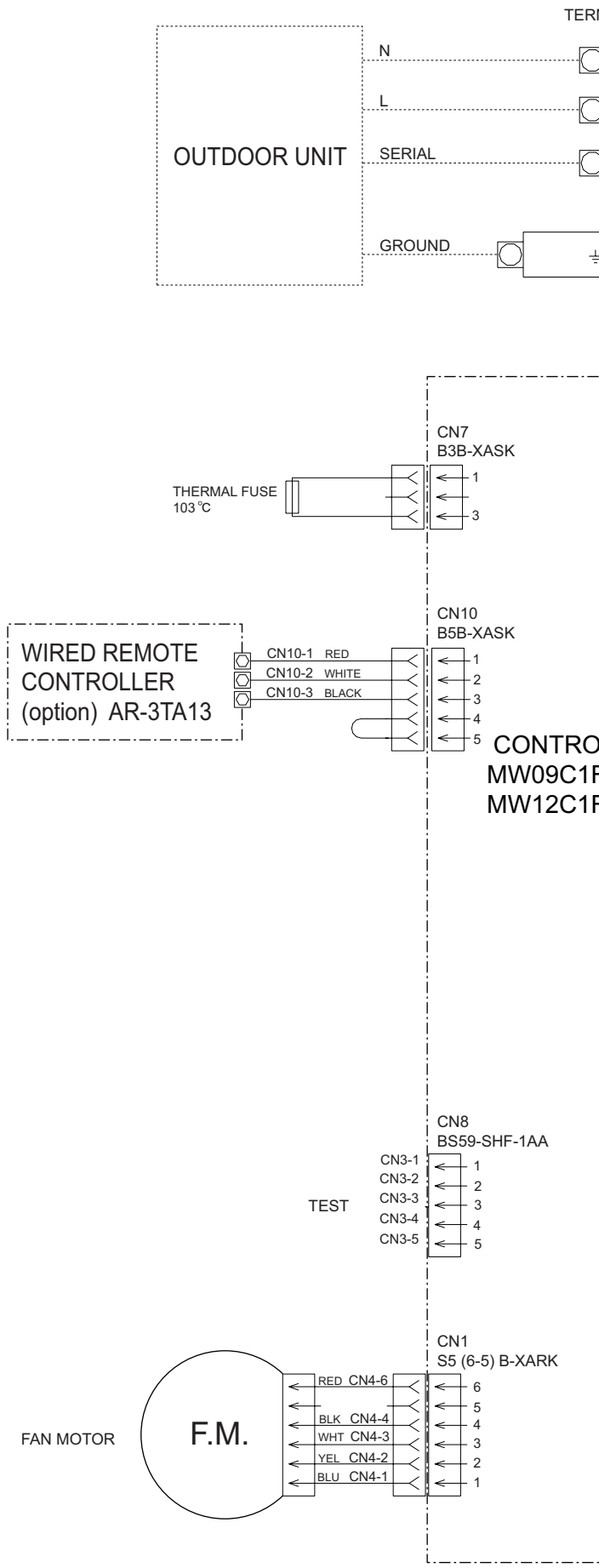

Models : MW09C1F, MW12C1F

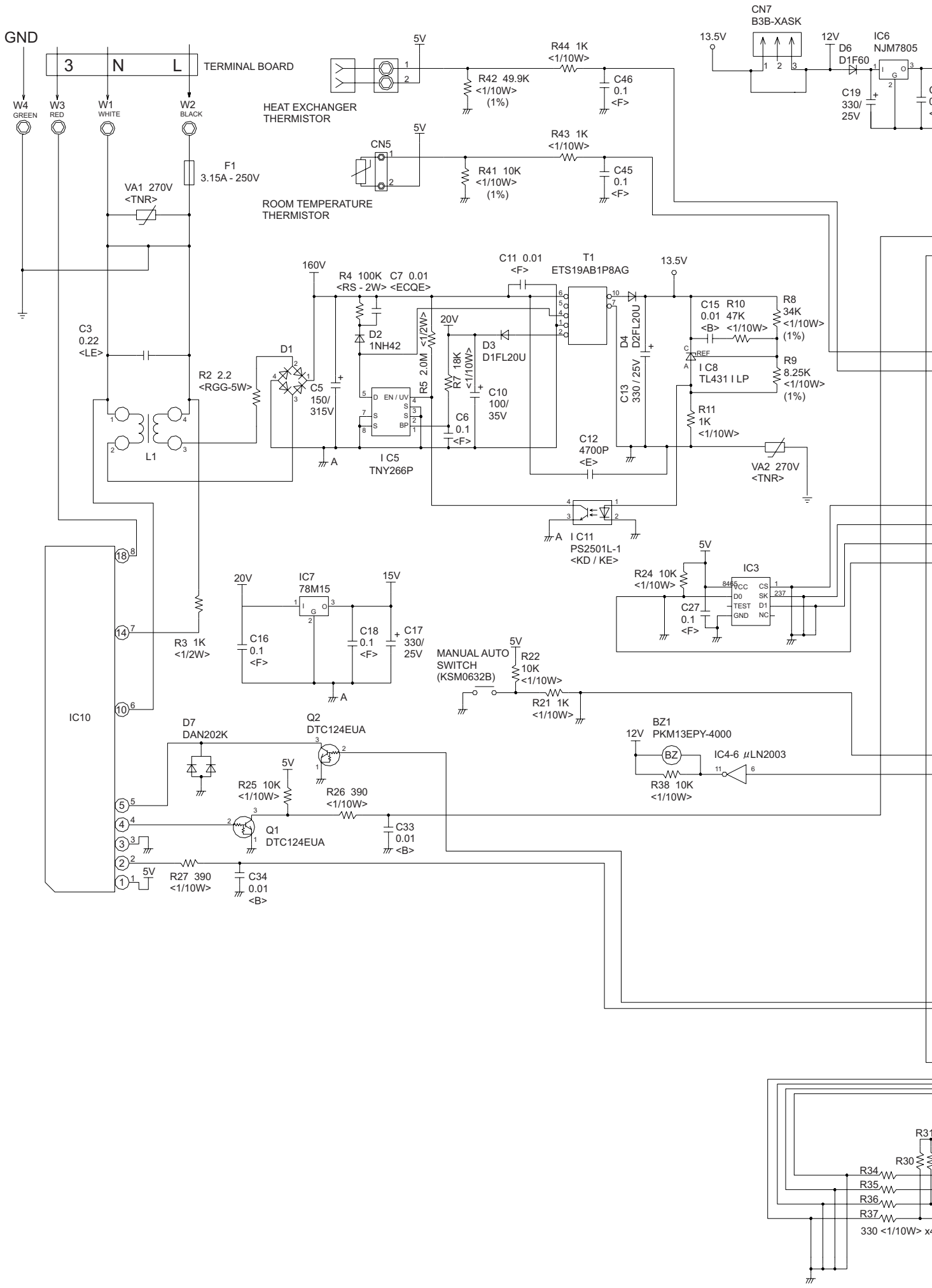

OUTDOOR PCB CIRCUIT DIAGRAM

Models : MR09C1F, MR12C1F

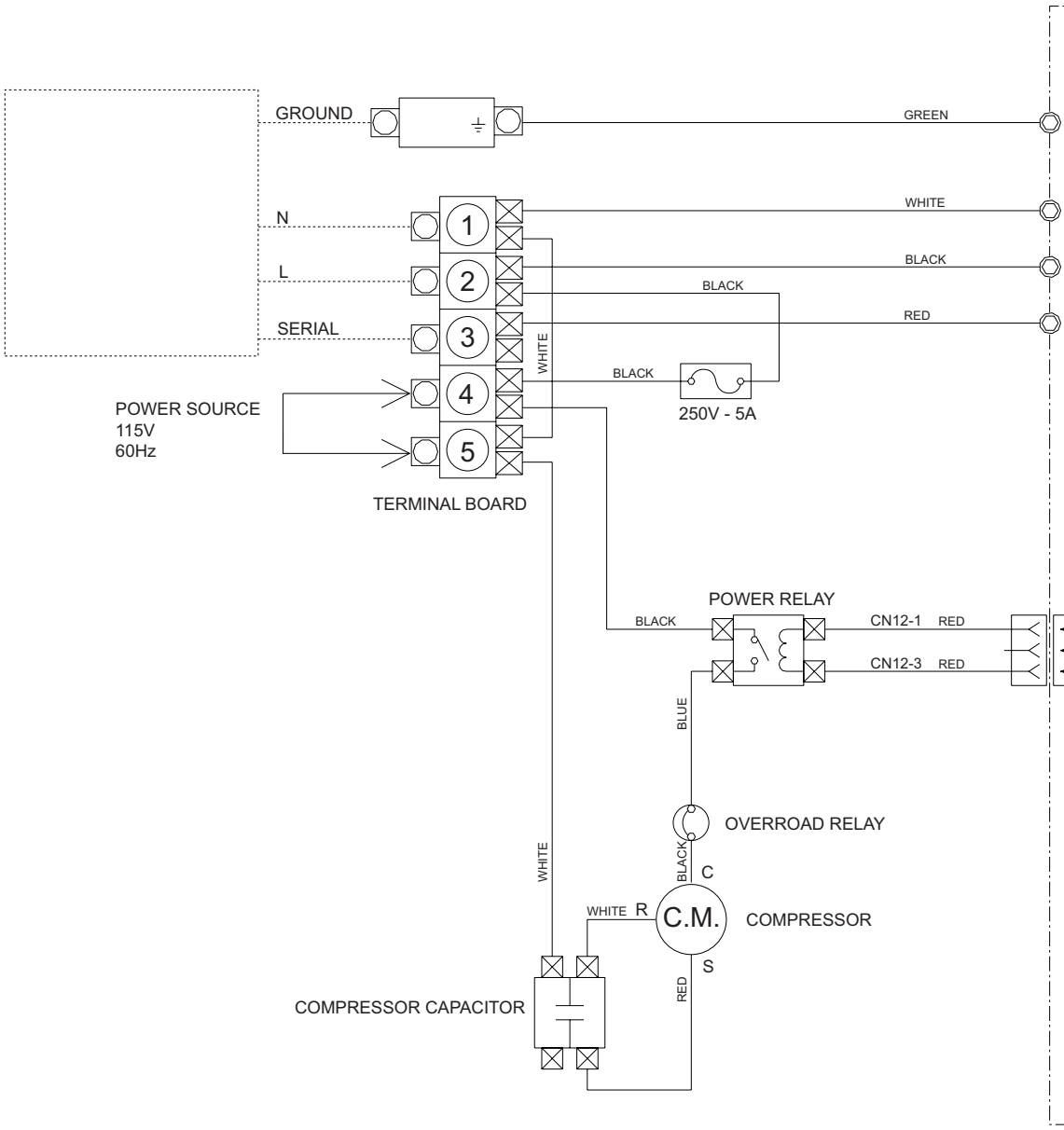

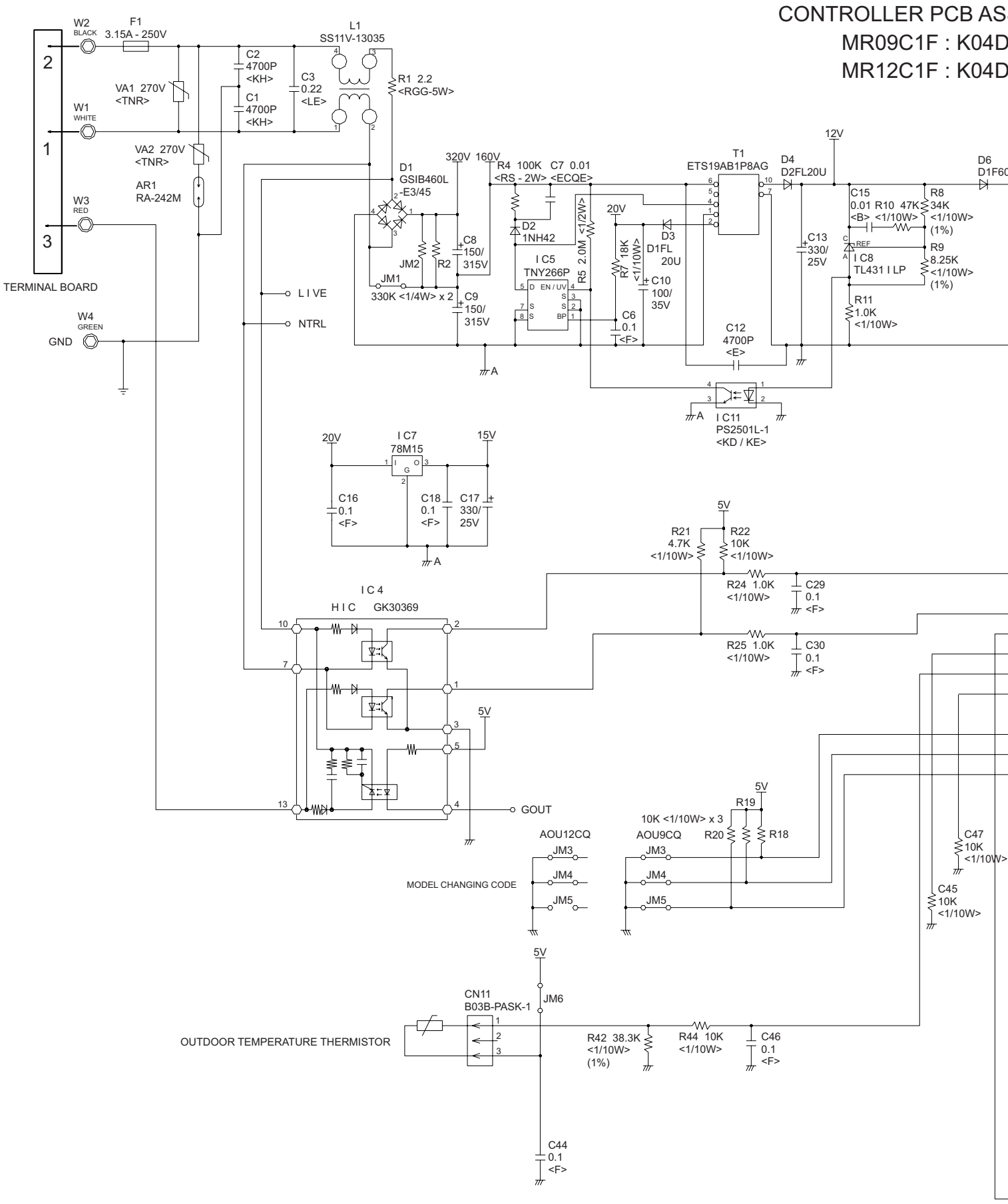
CONTROLLER PCB AS
MR09C1F : K04D
MR12C1F : K04D
TERMINAL BOARD
W2 BLACK
W1 WHITE
W3 RED
W4 GREEN
GND
F1 3.15A - 250V
VA1 270V <TNR>
VA2 270V <TNR>
AR1 RA-242M
C2 4700P <KH>
C1 4700P <KH>
C3 0.22 <LE>
L1 SS11V-13035
R1 2.2 <RGG-5W>
D1 GSIB460L -E3/45
JM1
JM2
R2
330K <1/4W> x 2
C8 150/ 315V
C9 150/ 315V
320V 160V
R4 100K <RS - 2W>
C7 0.01 <ECQE>
D2 1NH42
I C5 TNY266P
R5 2.0M <1/2W>
R7 18K <1/10W>
C6 0.1 <F>
20V
D3 D1FL 20U
C10 100/ 35V
T1 ETS19AB1P8AG
12V
D4 D2FL20U
C13 330/ 25V
C12 4700P <E>
I C11 PS2501L-1 <KD / KE>
C15 0.01 <B>
R10 47K <1/10W>
R8 34K <1/10W> (1%)
R9 8.25K <1/10W> (1%)
I C8 TL431 I LP
R11 1.0K <1/10W>
D6 D1F60
LIVE
NTRL
A
I C7 78M15
20V
15V
C16 0.1 <F>
C18 0.1 <F>
C17 330/ 25V
5V
R21 4.7K <1/10W>
R22 10K <1/10W>
R24 1.0K <1/10W>
C29 0.1 <F>
R25 1.0K <1/10W>
C30 0.1 <F>
I C4 H I C GK30369
GOUT
R19
R20
R18
10K <1/10W> x 3
AOU12CQ
AOU9CQ
JM3
JM4
JM5
MODEL CHANGING CODE
C47 10K <1/10W>
C45 10K <1/10W>
CN11 B03B-PASK-1
JM6
OUTDOOR TEMPERATURE THERMISTOR
R42 38.3K <1/10W> (1%)
R44 10K <1/10W>
C46 0.1 <F>
C44 0.1 <F>

ERROR CONTENTS

Kind of error	Indication on LED		Indication on wired remote controller	Contents
	Operation LED (red)	Timer LED (green)		
Communication	Off	0.5 sec / twice	01	Serial (reverse) error after operation
		0.5 sec / three times		Serial (reverse) error during operation
		0.5 sec / four times		Serial (forward) error after operation
		0.5 sec / five times		Serial (forward) error during operation
Indoor unit Thermistor	0.5 sec / twice	0.5 sec / twice	02	Room temp. thermistor error
				open / short
		0.5 sec / three times	04	Heat exchange (middle) thermistor error
				open / short
Outdoor unit Thermistor	0.5 sec / three times	0.5 sec / three times	06	Heat exchange thermistor error
				open
		0.5 sec / four times	0A	Outdoor temp. thermistor error
				open / short
Indoor unit PCB	0.5 sec / four times	0.5 sec / eight times	21	Opposite VDD permanent stop protection
				(Electric aircleaner, circuit error)
Outdoor unit PCB	0.5 sec / five times	0.5 sec / six times	1b	Outdoor unit fan control error
Indoor unit fan motor	0.5 sec / six times	0.5 sec / twice	12	Lock
		0.5 sec / three times		r.p.m abnormal
Power supply	0.1 sec flashing on red and orange LED		No Indication	Power supply abnormal
Model distinction	0.1 sec flashing on all LED		11	Model distinction error

DISASSEMBLY ILLUSTRATION

INDOOR UNIT

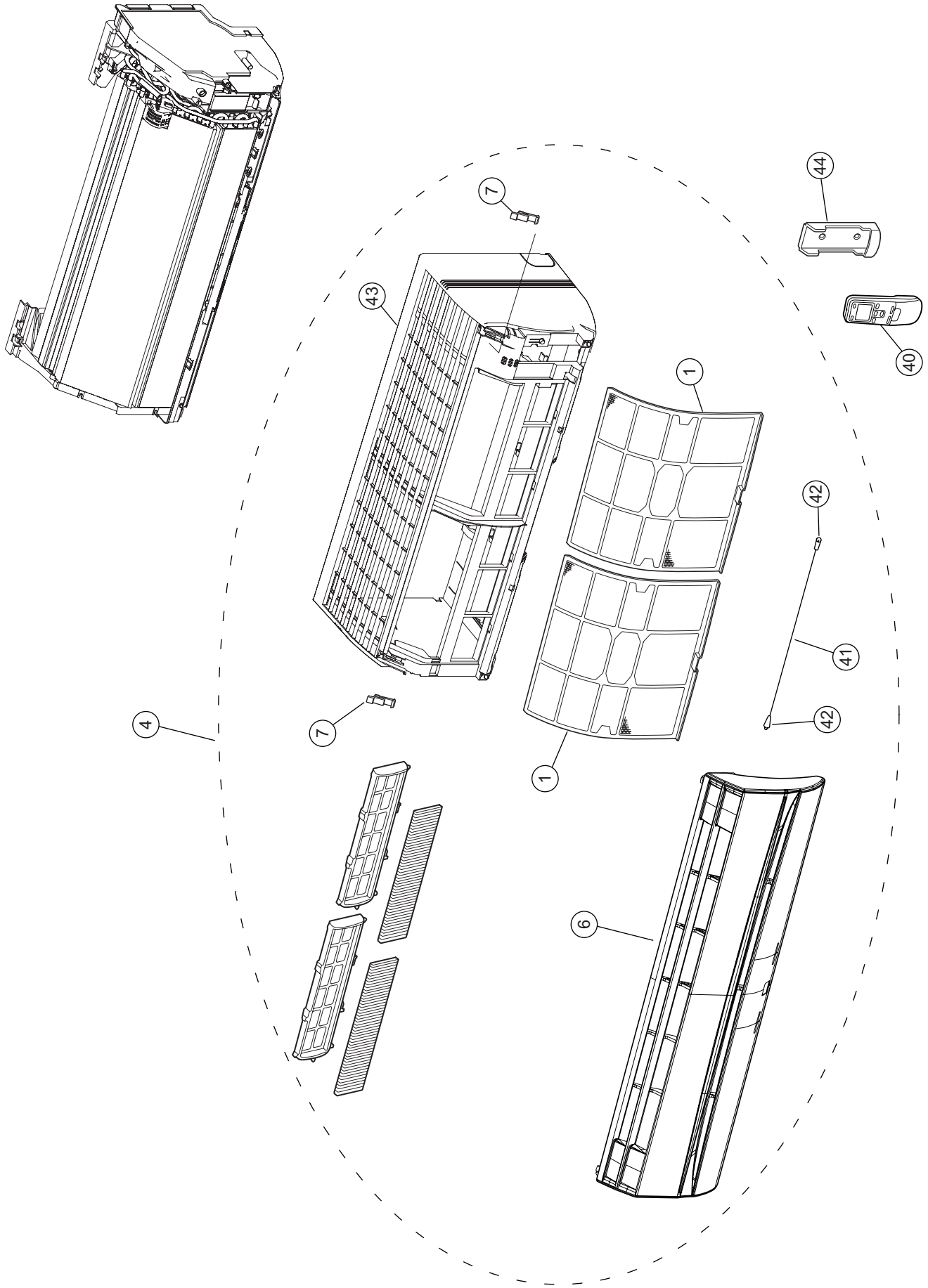

INDOOR UNIT

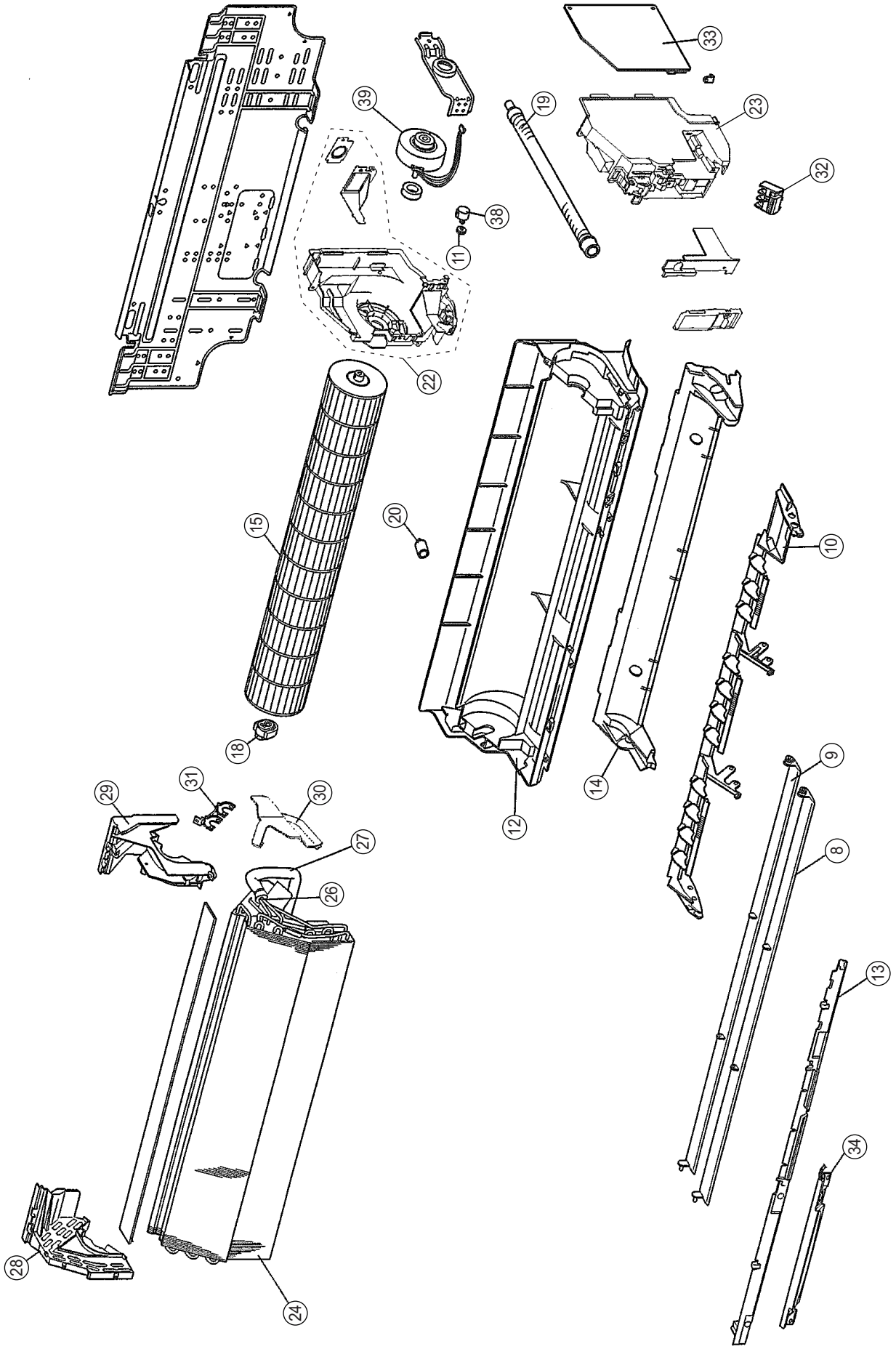

OUTDOOR UNIT

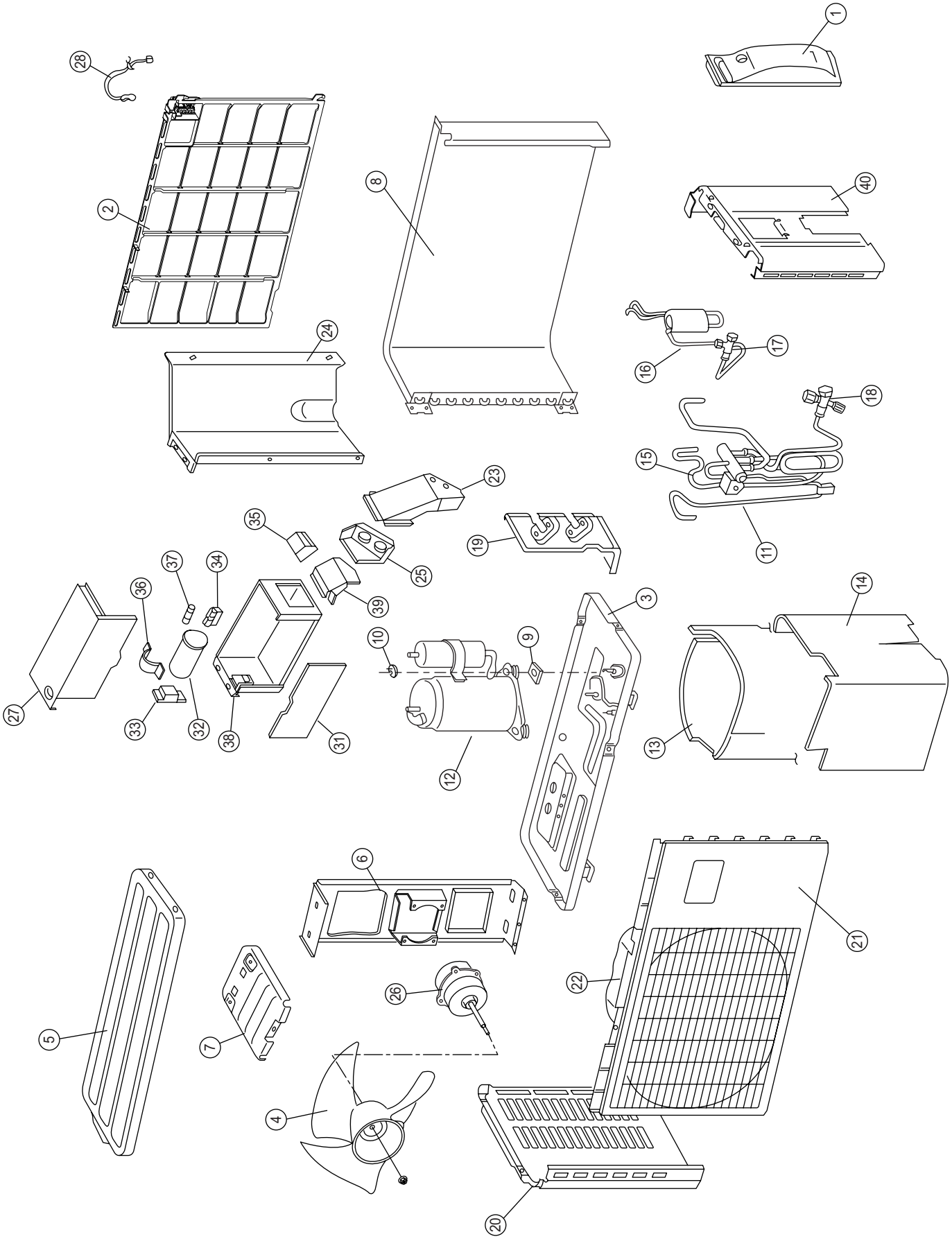

PARTS LIST

INDOOR UNIT

Ref. No	Description	Part No.		Ord. Q'ty
		MW09C1F	MW12C1F	
1	AIR FILTER	67201200	67201200	
4	FRONT PANEL COMPLETE	67201201	67201201	
6	INTAKE GRILLE ASSY	67201202	67201202	
7	GRILLE CLAMP	67200936	67200936	
8	LOUVER U	67201203	67201203	
9	LOUVER Z	67201204	67201204	
10	LOUVER HOLDER	67201205	67201205	
11	GEAR-A	67201206	67201206	
12	CASING ASSY	67201207	67201207	
13	CASING COVER-F	67201208	67201208	
14	CASING COVER-B	67201209	67201209	
15	CROSS FLOW FAN ASSY	67201210	67201210	
18	SHAFT HOLDER-C	67200922	67200922	
19	DRAIN HOSE ASSY	67200913	67200913	
20	DRAIN CAP ASSY	67201211	67201211	
22	SWITCH BOX ASSY	67201212	67201212	
23	BOX SWITCH			
24	EVAPORATOR ASSY	67201214	67201214	
25	EVAPORATOR SEAL			
26	JOINT PIPE ASSY	67201216	67201216	
27	INSULATION (PIPE) E	67201217	67201217	
28	HOLDER (EVAP)-L	67201218	67201218	
29	HOLDER (EVAP)-R	67201219	67201219	
30	WATER SEAL	67201220	67201220	
31	EVAPORATOR BRACKET	67201221	67201221	
32	TERMINAL	67201222	67201222	
33	CONTROLLER PCB ASSY	67201223	67201231	
34	DISPLAY PCB ASSY	67201224	67201224	
38	STEP MOTOR	67201225	67201225	
39	FAN MOTOR	67201226	67201226	
40	REMOTE CONTROL	67201227	67201227	
41	GRILLE GUARD	67201228	67201228	
42	BUSHING	67201229	67201229	
43	FRONT PANEL	67201230	67201230	
44	REMOTE CONTROL HOLDER	67203202	67203202	

OUTDOOR UNIT

Ref. No	Description	Part No.		Ord. Q'ty
		MR09C1 F	MR12C1 F	
1	COVER (SWITCH (	67201300	67201300	
2	PROTECTIVE NET	67201301	67201301	
3	BASE PAN	67201302	67201302	
4	FAN BLADE	67201303	67201303	
5	PANEL, TOP	67201304	67201304	
6	MOTOR BRACKET	67201305	67201305	
7	REM PLATE	67201306	67201306	
8	CONDENSER ASY	67201307	67201338	
9	SPACER (RUBBER)	67201308	67201308	
10	NUT, SPECIAL ASSY	67201309	67201309	
11	DISCHARGE TUBE	67201310	67201339	
12	COMPRESSOR	67201311	67201340	
13	COMRESSOR BLANKET -A	67201312	67201312	
14	COMRESSOR BLANKET -B	67201313	67201313	
15	SUCTION TUBE	67201314	67201314	
16	CAPILLARY ASSY	67201315	67201341	
17	2-WAY VALVE ASSY	67201316	67201316	
18	3-WAY VALVE ASSY	67201317	67201317	
19	BRACKET, VALVE	67201318	67201318	
20	CABINET, LEFT SIDE	67201319	67201319	
21	PANEL (FRONT)	67201320	67201320	
22	RING (FAN)	67201321	67201321	
23	COVER TERMINAL C	67201322	67201322	
24	SEPARATER C	67201323	67201323	
25	BRACKRT CONDUIT	67201324	67201324	
26	FAN MOTOR	67201325	67201325	
27	CONTROL COVER	67201326	67201326	
28	THERMISTOR (OUTDOOR)	67201327	67201327	
31	PWB ASSY	67201328	67201342	
32	CAPACITOR	67201329	67201329	
33	RELAY	67201330	67201330	
34	FUSE HOLDER	67201331	67201331	
35	TERMINAL	67201332	67201332	
36	CLAMP, CAPACITOR	67200954	67200954	
37	FUSE	67201333	67201333	
38	CONTROL BOX ASSY	67201334	67201334	
39	BRACKET TERMINAL	67201335	67201335	
40	CABINET RIGHT	67201336	67201336	
*	EMBLEM REAR, FRIEDRICH	67201337	67201337	

STANDARD ACCESSORIES

Name and Shape	Q'ty	Use
Wall hook bracket	1	For indoor unit installation 9310001004
Remote control unit	1	Use for air conditioner operation 9313693077
Battery (penlight)	1	For remote control unit 0600185527
Cloth tape	1	For indoor unit installation 9310519004
Remote control unit holder	1	Use as remote control unit holder 9305642014
Tapping screw (big) (ø4 × 20)	8	For wall hook bracket installation 0700076046
Tapping screw (small) (ø3 × 12)	2	For remote control unit holder installation 0700019036

0511G2951