This Owner's Manual is provided and hosted by Appliance Factory Parts.

Appliance Factory Parts
Experts in BBQ, Humidifier, & Appliance Parts
1-800-955-7075

Lynx L42FR-1-2006 Owner's Manual

Shop genuine replacement parts for Lynx L42FR-1-2006

Find Your Lynx Grill Parts - Select From 362 Models

-------- Manual continues below --------

Installation, Care and Use of Your Lynx Professional Cooking Product

This manual covers the following 2006 Lynx products:

GRILL MODELS	PROSEAR MODELS	SIDE BURNER MODELS
L27 & L27F	L30PSR & L30PSFR	LSB2PC
L27R & L27FR	L36PSR & L36PSFR	LSB1
L30R & L30FR	L42PSR & L42PSFR	LSB2
L36R & L36FR	L54PSR & L54PSFR	
L42R & L42FR	L30POD	
	LPSGE	

FOR OUTDOOR USE ONLY

IMPROPER INSTALLATION, ADJUSTMENT, ALTERATION, SERVICE OR MAINTENANCE CAN CAUSE PROPERTY DAMAGE, INJURY OR DEATH. READ THIS MANUAL THOROUGHLY BEFORE INSTALLATION, USE OR SERVICING OF THIS EQUIPMENT

CALIFORNIA PROPOSITION 65 WARNING

The burning of gas cooking fuel generates some by-products, which are on the list of substances, which are known by the State of California to cause cancer or reproductive harm. California law requires businesses to warn customers of potential exposure to such substances. To minimize exposure to the substances, always operate this unit according to the use and care instructions found in this manual. Be certain to provide adequate ventilation when cooking. California Proposition 65 lists "Silica, crystalline" which is used in one of the components of the IR burner, as an agent known to the state of California to cause cancer.

NOTE TO INSTALLER

This manual must remain with grill. Check your local building codes for proper method of installation. In the absence of local codes, this unit should be installed in accordance with National Fuel Gas Code No. ANSI Z21.58D-2002 USA or CAN/CGA-B149.1/.2 Natural Gas/Propane Code.(Canada) latest edition or the National Electrical Code ANSI/NFPA No. 70 or the Canadian Electrical Code CGA 1.6b2002 or latest edition.

Rev. 12-05

Important Safety Considerations

WARNING! Read this manual carefully and completely before using your grill to reduce the risk of fire, burn hazard or other injury, and to ensure proper installation and servicing.

FOR YOUR SAFETY

If you smell gas:

1. Shut off gas to the appliance.
2. Extinguish any open flames.
2. Open lid.
4. If odor continues, immediately call your gas supplier or fire department.

AVERTISSEMENT

S'il y a une odeur de gaz:

1. Coupez l'admission de gaz de l'appariel.
2. Éteindre toute flamme nue.
3. Ouvrir le couvercle.
4. Si l'odeur persiste, appeler immédiatement votre compagnie de gaz ou départment des incendies.

FOR YOUR SAFETY

1. Do not store or use gasoline or other flammable vapors and liquids in the vicintiy of this or any other appliance.

2. An LP cylinder not connected for use shall not be stored in the vicinity of this or any other appliance.

AVERTISSEMENT

1. Ne pas entreposer ni utiliser de l'essence ni d'autres vapeurs ou liquides inflammables dans le voisinage de l'appareil, ni de tout autre appareil.

2. Une bouteille de propane qui n'est pas raccordée en vue de son utilisation, ne doit pas être entreposée dans le voisinage de cet appareil ou de tout autre appareil.

FOR OUTDOOR USE ONLY: If stored indoors, detach and leave L.P. cylinder outdoors.

POUR UTILISATION À L'EXTÉRIEUR SEULEMENT: Si l'appareil est entreposé à l'interieur, enlever les bouteilles et les laisser à l'extérieur.

BEFORE LIGHTING

1. Read instructions before lighting.
2. Open lid during lighting.
3. If ignition does not occur in 5 seconds, turn the burner control(s) off, wait 5 minutes, and repeat the lighting procedure.

AVANT D'ALLUMER L'APPAREIL

1. Lisez les instructions avant d'allumer l'appareil.
2. Ouvrez le couvercle avant d'allumer l'appareil.
3. Si l'appareil ne s'allume pas en 5 secondes, fermez le robinet du brûleur, attendez 5 minutes, et procédez de nouveau à l'allumage.

Table of Contents

Precautions for Installation and Storage....2
Locating Your Grill....4
Cutout Dimensions for Built-ins....5
Unpacking and Assembly....6
Electrical Requirements and Hook-up....7
Gas Requirements and Hook-up....8
Precautions for Using Your Grill....10
Leak Testing....11
Model Indentification....12
Using the Grill....13
Lighting the Brass Burners....14
Using the ProSear Burner or Pod....15
Using the Rotisserie....16
Using the Smoker Box....17
Cleaning the Grill....18
Burner Removal and Cleaning....19
Troubleshooting....20
How to Obtain Service....21
Warranty....22

IF SHIPMENT ARRIVED DAMAGED:

1) VISIBLE LOSS OR DAMAGE: Be certain this is noted on freight bill or express receipt and signed by person making delivery.

2) FILE CLAIM FOR DAMAGES IMMEDIATELY, regardless of extent of damage.

3) CONCEALED LOSS OR DAMAGE: If damage is unnoticed until merchandise is unpacked, notify transportation company or carrier immediately and file "concealed damage" claim with them. This should be done within (15) days of date delivery is made to you. Be sure to retain container for inspection. We cannot assume responsibility for damage or loss incurred in transit.

See page 21 for information on obtaining service or contacting Lynx.

Precautions for Installation and Storage

1) DO NOT store or use gasoline or other flammable vapors and liquids in the vicinity of this or any other appliance.

2) Never store additional or empty propane cylinders in the grill cabinet or around the grill. Do not store propane cylinders indoors or on their sides. Never use dented, rusty or damaged propane cylinders.

3) Children should not be left alone or unattended in an area where a grill is located. Place your grill well away from areas where children play. Do not store items that may interest children in or around the grill, in the cart or in the masonry enclosure. When in use, portions of the grill are hot enough to cause severe burns.

4) Never move the grill when hot.

5) Always adhere to the required clearances from combustibles as detailed. The grill is designed for outdoor use only. Never use in a garage, building, shed, breezeway or other enclosed area.

6) Gas grills are not design certified for and are not to be installed in or on recreational vehicles, portable trailers, boats or any other moving installation.

7) Have an ABC Fire Extinguisher accessible — never attempt to extinguish a grease fire with water or other liquids.

8) Store your grill in a well-ventilated area. Remove the LP cylinder, if so equipped, and store it outdoors in a well-ventilated area away from heat and away from where children may tamper with it.

9) Keep any electrical supply cord and the fuel supply hose away from any heated surfaces. Electrical cords should be placed away from walkways to avoid tripping hazard.

10) Do not repair or replace any part of the grill unless specifically recommended in this manual. Other service should be performed by a qualified tech.

11) If the grill is installed by a professional installer or technician, be sure that he shows you where your gas supply shut-off is located. All gas lines must have a shut-off that is readily and easily accessible. If you smell gas, check for gas leaks immediately. Check only with a soap and water solution. Never check for gas leaks with an open flame.

SPECIAL NOTE ON USING YOUR GRILL IN WINDY CONDITIONS

As a high-performance gas appliance, your Lynx grill requires significant amounts of air to support the combustion process. Your grill has been engineered to take air in through the control panel area, and exhaust the combustion byproducts out through the gap between the front and rear hoods (see figure 2 at right).

Using your grill in windy conditions can disrupt the proper flow of air through your grill, leading to reduced performance, or in certain severe cases, causing heat buildup in the control panel area. This can lead to problems such as having the control knobs melt, or burn hazards when the control panel surfaces become too hot to touch.

During high wind conditions, it is best if you don't use your grill. If you live in an area that is subject to frequent high winds, or a steady directional wind, then the installation of a suitable windbreak may be advised.

If you have a freestanding grill, it is best to position the unit so the prevailing wind blows into the front control panel, thus supporting the proper airflow. Winds hitting the back of the grill directly are the most likely to cause problems, although wind blowing along the hood gap can also be problematic.

Please note that damage to your grill resulting from use in windy conditions, such as melted knobs or igniter wires, or control panel discoloration from heat buildup, are excluded from warranty coverage.

SPECIAL NOTE FOR LP USE

Never connect any unregulated gas supply to the grill. The hose with regulator and Type 1 connection included with your grill has these safety features:

• The system will not allow gas to flow until a positive connection has been made.

•The system has a thermal element that will shut-off the flow of gas between 115 and 150°C (240 and 300°F).

• The system has a flow limiting device which, when activated, will restrict the flow of gas to 10 cubic feet per hour.

NOTE: The cylinder control valve must be turned off before any connection is made or removed. **NEVER USE GRILL WITHOUT FIRST LEAK TESTING THIS CONNECTION, FOLLOWING THE PROCEDURE ON PAGE 11.**

Should the large, black, thermally sensitive coupling nut be exposed to temperatures above 115-150°C, it will soften, allowing the regulator probe to disengage from the cylinder valve, thereby shutting off the flow of gas. Should this occur, do not attempt to reconnect the nut. Remove the entire regulator assembly and replace it with a new one. The cause of the excessive heat should be determined and corrected before operating your grill again. The regulator probe also contains a flow-sensing element, which will limit the flow of gas to the regulator to a manageable amount in the event of a hose or regulator rupture. If it is evident that the flow control device has activated, the cause of the excess flow should be determined and corrected before using your grill again.

NOTE: Improper lighting procedures can cause the flow control to activate, resulting in reduced heat output. If this is suspected, to reset flow control, shut off all burner controls and cylinder valve, wait 30 seconds, then turn cylinder valve on extremely slowly, wait five (5) seconds and turn burner valve on to light.

Figure 3-1 - *The included hose and regulator must be used if your grill is set-up for LP Gas.*

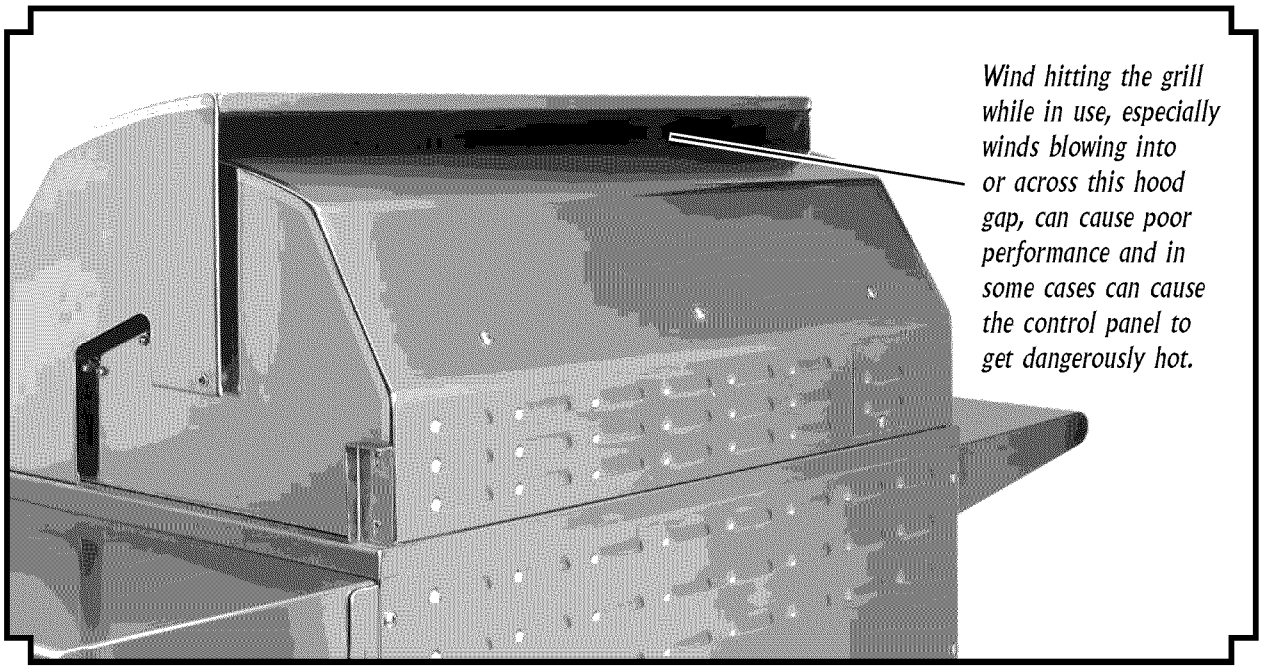

Figure 3-2 - *Steady or gusty winds can prevent the normal exhaust of hot gases. Locate your grill away from prevailing winds and avoid grilling in windy conditions. If needed, install a windbreak.*

Locating Your Grill

When selecting a suitable location, take into account concerns such as exposure to wind and traffic paths. Try to keep all gas supply lines as short as possible. Never locate the grill in a building, garage, shed or other such enclosed area. A carpenter's "spirit level" should be used to assure that the unit is level both front-to-back and side-to-side. If it is not level, burner combustion may be erratic or the unit may not function efficiently. If the floor is uneven or has a decided slope, re-leveling may be required after each moving of a freestanding unit.

BUILT-IN INSTALLATIONS:

The LYNX Built-In Grill is designed for easy installation into masonry enclosures. For non-combustible applications, the grill drops into the opening shown in the cutout detail drawing and hangs from its counter-top trim. A deck is not required to support it from the bottom. When using the insulated jacket in a combustible enclosure, the jacket must be supported from the bottom by a ledge on each side or a full deck beneath the jacket. Review the detailed drawing and pay special attention to the provisions shown for gas line hook-up. It is recommended that the enclosure have ventilation holes to prevent gas build-up in the event of a leak. The deck ledges and counter should be flat and level. If your grill is equipped with a rotisserie, electrical service should be provided (on the Left Side of most models).

REAR HOOD CLEARANCE:

Clearance is required behind the grill to allow the front hood to open (see figure 4-1). 27" and 36" models require a minimum of 2" clearance, while 30", 42" and 54" models require a minimum of 4" clearance. The grill exhausts combustion products and cooking greases to the back. Never locate the grill where this exhaust will be difficult to clean.

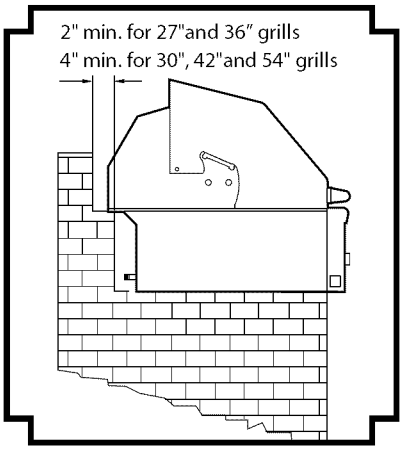

Figure 4-1 - *Required clearance to allow opening of front hood.*

CLEARANCE TO COMBUSTIBLE CONSTRUCTION:

Minimum clearance from sides and back of unit to adjacent combustible construction below top of unit are 12" from sides and 12" from back.

Dégagement minimal entre les parois latérales et l'arrière de l'appariel et la construction combustible au-dessous du panneau supérieur de l'appareil (30 cm à partir des parois latérales et 30 cm à partir de l'arrière).

Minimum horizontal clearance from sides and back of unit to adjacent vertical combustible construction extending above top of unit is 12" from sides and 12" from back.

Dégagement horizontal minimal entre les parois latérales et l'arrière de l'appariel et la construction verticale combustible au-dessus de l'appareil (30 cm à partir des parois latérales et 30 cm à partir de l'arrière).

Do not use this appliance under overhead combustible surfaces.

Ne pas utiliser cet appareil sous une surface combustible.

A minimum of 6" of clearance is needed on each side of the grill for the motor and skewer.

If the grill is to be placed into a combustible enclosure, an approved insulated jacket is necessary and is available from your LYNX dealer. Use only a LYNX insulated jacket as it has been designed and tested specifically for your Grill. Refer to next page for cutout dimensions.

WARNING

Installing this product into a combustible enclosure without an insulated jacket could result in fire, property damage and personal injury.

Cutout Dimensions for Built-ins

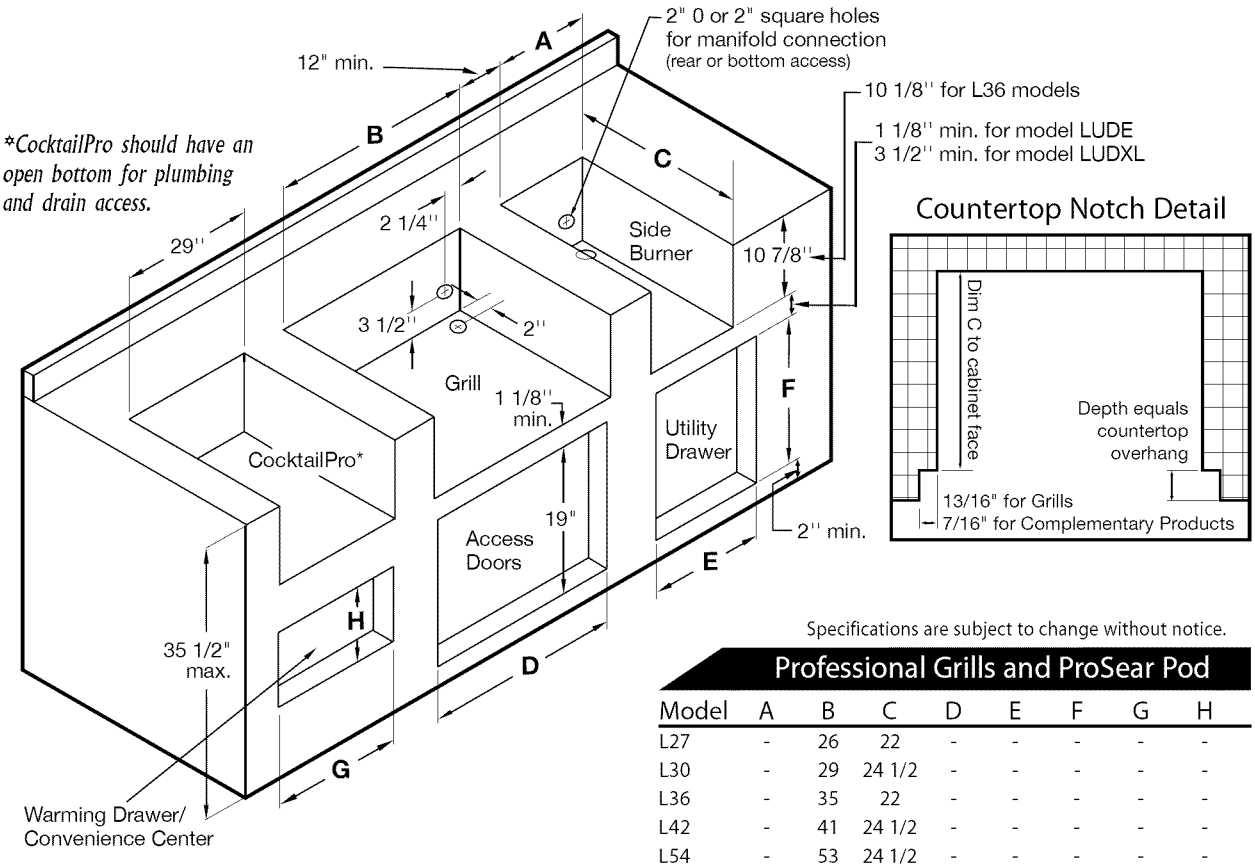

Specifications are subject to change without notice.

Professional Grills and ProSear Pod

Model	A	B	C	D	E	F	G	H
L27	-	26	22	-	-	-	-	-
L30	-	29	24 1/2	-	-	-	-	-
L36	-	35	22	-	-	-	-	-
L42	-	41	24 1/2	-	-	-	-	-
L54	-	53	24 1/2	-	-	-	-	-
L30PSP	-	29	24 1/2	-	-	-	-	-

Note: Insulated jacket required for all grills installed into a combustible enclosure. See detail below.

With Insulated Jacket Installed						
Model	a	b	c	d	e	f
LIJ27	33	5	24	4 1/2	3	11 5/8
LIJ30	36	5	26 1/2	4 1/2	3	11 5/8
LIJ36	42	5	24	4 1/2	3	11 5/8
LIJ42	48	5	26 1/2	4 1/2	3	11 5/8
LIJ54	60	5	26 1/2	4 1/2	3	11 5/8

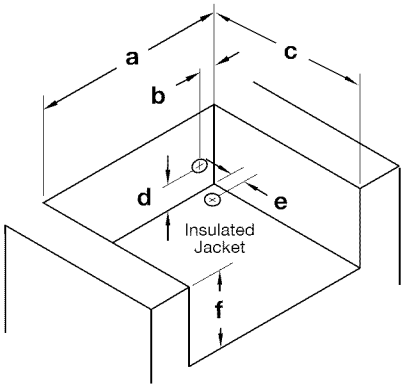

Complementary Products

Model	A	B	C	D	E	F	G	H
Access Doors								
LDR18	-	-	-	16 1/4	-	-	-	-
LDR21	-	-	-	19 1/4	-	-	-	-
LDR27	-	-	-	25 1/4	-	-	-	-
LDR30	-	-	-	28 1/4	-	-	-	-
LDR36	-	-	-	34 1/4	-	-	-	-
LDR42	-	-	-	40 1/4	-	-	-	-
Side Burners and ProSear Grill Extender								
LSB1	12 1/8	-	22 1/2	-	-	-	-	-
LSB2	12 1/8	-	22 1/2	-	-	-	-	-
LSB2PC	24 1/4	-	22 1/2	-	-	-	-	-
LPSGE	12 1/8	-	22 1/2	-	-	-	-	-
Utility Drawers								
LUDE	-	-	24	-	12 1/8	19 1/4	-	-
LUDXL	-	-	24 1/4	-	17 1/4	18 9/16	-	-
Warming Drawers								
L30WD	-	-	20 1/2	-	-	-	28 1/2	10
L42CC	-	-	24 1/2	-	-	-	40 1/4	19 3/8
CocktailPro								
CS30	-	-	22 3/4	-	-	-	-	-

Unpacking and Assembly

Your grill arrives nearly ready to use and requires little assembly. By carefully following these steps, you will be assured of safe initial operation.

1) Cut the main strap holding the grill to the pallet. With assistance, remove grill from pallet and place into desired location.

2) Carefully cut the cable ties securing the warming rack and rotisserie spit (if equipped). Remove these parts and set aside.

3) Remove the grill racks, then remove any loose items from the firebox, including the rotisserie motor and L.P. hose.

4) Carefully remove the briquette trays by lifting the front of the tray and sliding it towards the front of the grill.

5) Inspect briquette trays for loose or missing briquettes. If found, follow procedure at right to reinstall.

6) Cut and remove wire and/or cable ties from burners. ProSear burners may be secured from the bottom side. Remove styrofoam block from under ProSear burner cover.

7) Re-install briquette trays by reversing procedure from step 4.

8) Re-install grill racks.

You are now ready to proceed with the utility connections.

TO REPLACE BRIQUETTES

The special Lynx ceramic briquettes are secured to the trays with stainless steel clips. To insert a briquette into the tray, it is necessary to remove the clip from one side of the empty slot. This is done by bending the retaining tabs for the clip located on the back side of the briquette tray as shown below.

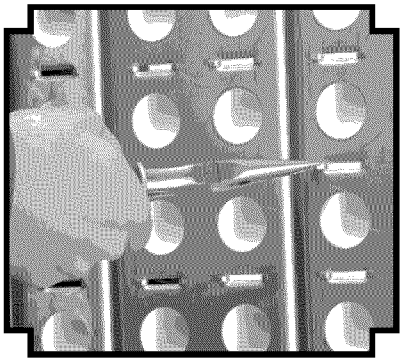

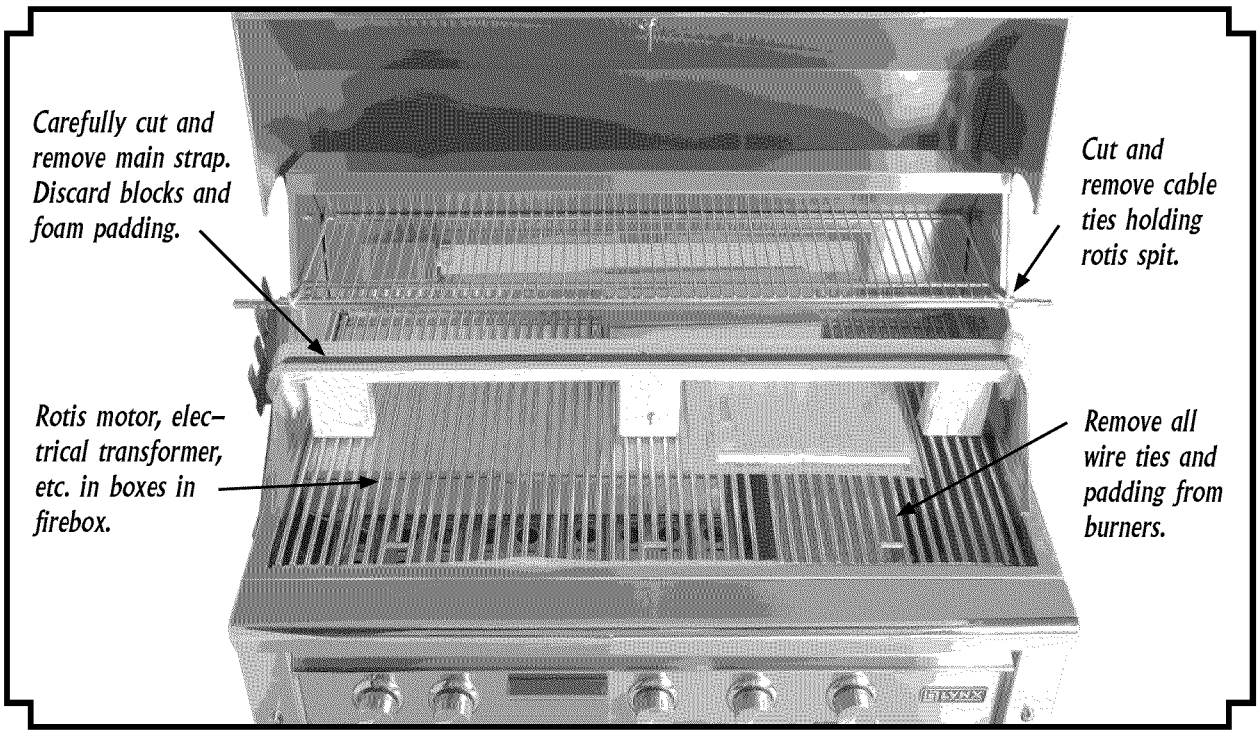

Figure 6-1 - *Identification of items needing to be removed and/or assembled prior to use.*

WARNING

Electrical Grounding Instructions:

This outdoor gas cooking appliance is equipped with a three-prong (grounding) plug for your protection against shock hazard and should be plugged directly into a properly grounded three-prong outlet. Do not cut or remove the third prong from this plug.

AVERTISSEMENT

Instruction pour la mise à la terre electrique:

Cet appareil est muni d'une fiche à trois broches (mise à la terre) afin de vous protéger des chocs et doit être branché directement dans une prise de courant à trois broches adéquatement mise à la terre. Il ne faut pas couper ou enlever la broche de mise à la terre de cette fiche.

CONNECTION TO AC

Installation should include an outdoor 120VAC 15A GFI electrical outlet located adjacent to the grill. A qualified electrician can install a GFI outlet either inside the island enclosure for built-in units, or near the normal location of use for freestanding units. The GFI plug has an internal breaker which reduces shock hazard.

For freestanding grills, simply plug the electrical cord into a GFI plug. For built-in units, the supplied 12V transformer must be connected to the grill during installation (see Fig. 7-1). Once connected to the grill, the power cord may be plugged into a GFI outlet. If the electrical system fails to operate, a connection may have come loose in shipping. See the Troubleshooting section for more details.

BATTERY INSTALLATION

Your grill includes a standard 9v battery that provides backup power for the electronic ignition system. To install or replace the battery, follow this procedure:

1) Locate the battery compartment on the left side of the control panel (see figure 7-2).

2) Disengage the battery compartment by pushing the battery cover in the direction indicated by the arrow on the cover.

3) The battery compartment will disengage and protrude so that you may pull and remove the battery and compartment.

4) Insert and/or replace a new 9-volt battery into the battery compartment.

5) Insert the battery compartment back into the grill and gently push with your index finger until it engages.

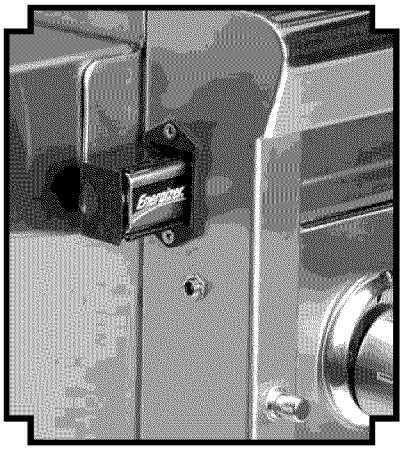

Figure 7-2 - *Locating battery compartment on left side of grill.*

The supplied 12V transformer is equipped with two output leads. Plug the leads into the two power jacks on the grill. The leads are interchangeable. It does not matter which lead plugs into which jack.

If you are having electrical trouble with your freestanding grill, check these connections to ensure they did not become loose in transit.

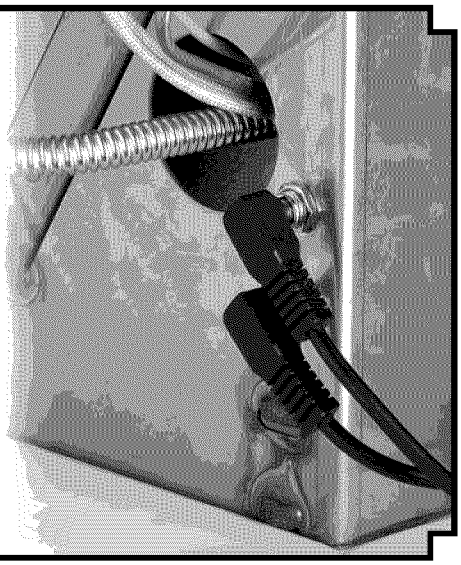

Figure 7-1 - *Transformer connection point on left rear grill frame.*

Gas Requirements & Hook-up

Your grill is setup to use either propane (LP) or natural gas (NAT).

It is very important that the grill rating plate matches with your gas supply.

The rating plate is located in one or more of the following places:

- under the drip tray
- on the heat shield behind the front panel
- on the inside left cabinet wall (most freestanding grills)

Do not attempt to operate the grill on any gas other than what the grill is orificed for and what the regulator is set for. Should you need to convert your grill for use with a different gas type, a conversion kit, available from your dealer, is required.

Never connect an unregulated gas line to the grill.

NATURAL GAS

The installation of the grill must conform with local codes or, in the absence of local codes, to the National Fuel Gas Code ANSI Z21.58D-2002 or latest edition. If installed in Canada, installation must be in accordance with Gas Code CAN / CGA-B149.1/.2 and local codes.

The gas supply line must be sized to accommodate all the gas-fired equipment that may be connected to that supply, i.e. total BTU output to be consumed, needs to be determined so as to calculate what size diameter pipe is needed, for the total length of pipe from the gas main (at house) to grill hook-up. If the gas line is too small, the grill will not function properly. In no case should pipe less than 3/4" dia. be used to connect this product.

An installer-supplied gas shut-off valve must be installed in an easily accessible location. All installer-supplied parts must conform to local codes with the National Electrical Code, ANSI/NFPA 70-1990 and the National Fuel Gas Code, ANSI Z21.58D-2002.

The appliance and its individual shut off valve must be disconnected from the gas supply piping system during any pressure testing of that system at test pressures above 1/2" PSIG (3.5KPA). The appliance must be isolated from the gas supply piping system by closing its individual manual shut off during any pressure testing. Do not apply threading compound to the first two pipe threads as to avoid clogging of the burner valves and orifice. Do not put sealant on any male end of flare fittings.

For built-in installations, it is recommended that any flexible pipe used be kept as short as possible. For freestanding units using natural gas, it is strongly recommended that a quick disconnect kit from Lynx be installed. This kit, part #LQD, is available from your dealer.

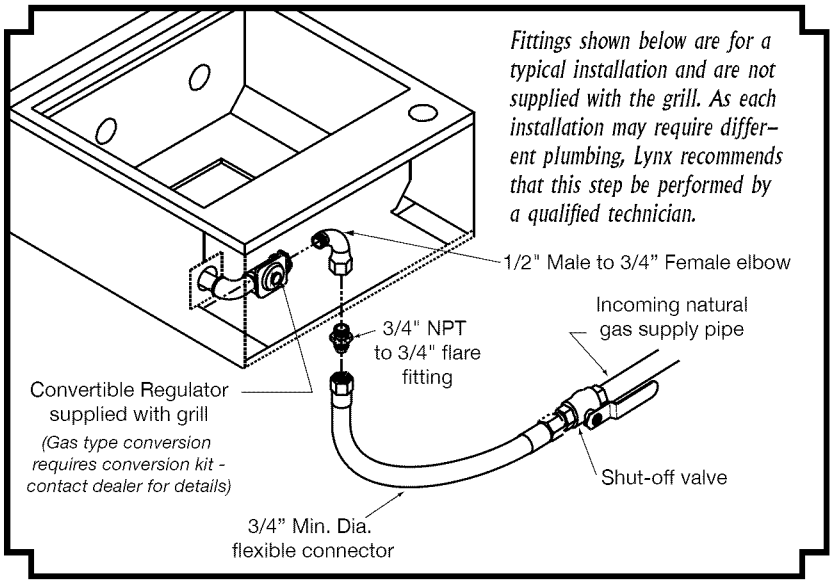

Figure 8-1 - *Typical attachment for using natural gas.*

L.P. GAS

Grills orificed for use with L.P. gas come equipped with an LP hose/regulator assembly for connection to a standard 20 lb. L.P. cylinder (Type 1). All fittings necessary to attach the hose/regulator to the grill are included. The L.P. tank is not included. Operating pressure: 10.0"W.C.

L.P. Tank Requirements

A dented or rusty L.P. tank may be hazardous and should be checked by your L.P. supplier. Never use a cylinder with a damaged valve. Always check for leaks after every L.P. tank change (see page 11).

The L.P. gas cylinder must be constructed and marked in accordance with the specifications for L.P. gas cylinders of the U.S. Department of Transportation (DOT) and designed for use with a Type 1 system only. Do not change the regulator/hose assembly from that supplied with the unit or attempt to use a 5LP-A equipped regulator/hose assembly with a standard 510 POL tank/valve assembly. The cylinder must be provided with a shut off valve terminating in an L.P. gas supply cylinder valve outlet specified, as applicable, for connection Type 1.

Cylinders must be stored outdoors in a well-ventilated area out of the reach of children. If the appliance is stored indoors, the L.P. cylinder must be removed from the appliance, and stored outside.

Turn off LP-gas supply at cylinder when appliance is not in use.

Fermez l'alimentation en GPL à la bouteille si l'appareil ne fonctionne pas.

The LP-gas supply cylinder must be disconnected when this appliance is not in use.

La bouteille de GPL doit être déconnectée si cet appareil ne fonctionne pas.

Your local L.P. filling station should be equipped with the proper equipment to fill your tank. If trading your tank in, always ensure to obtain only Type 1 20lb cylinders with an overfill protection device.

L.P. Connections

Connect the 3/8" flare end of the L.P. hose to the brass adapter on the manifold (as shown in figure 9-1). Connect the Regulator to the tank (with the tank valve fully closed). Although the flow of gas is stopped when the Type 1 system is disconnected, you should always turn the L.P. tank main valve off after each use and during transport of the tank or unit. Insert the regulator inlet into the tank valve and turn the black coupler clockwise until the coupler is tight. **Do not overtighten the coupler.**

To disconnect the coupler, first make sure the main tank valve is turned off. Grasp the coupler and turn counter clockwise. The inlet will then disengage.

Gas Line Purging

To purge the L.P. gas line, make sure all controls are in the OFF position. Turn the main tank valve on SLOWLY and turn one burner control valve on the unit to the "light" position (DO NOT LITE GRILL). Leave control ON for about 20 seconds to allow the air in the system to purge. Wait 5 minutes before attempting to light the burners.

Do not attempt lighting the grill within 5 minutes after purging!

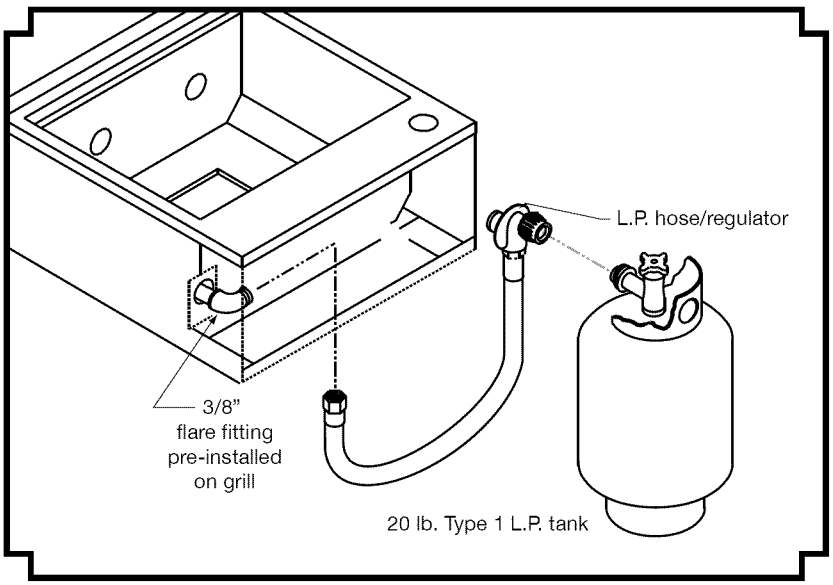

Figure 9-1 - *Typical attachment to L.P. tank.*

Precautions for Using Your Grill

READ THIS MANUAL CAREFULLY AND COMPLETELY BEFORE USING YOUR GRILL TO REDUCE THE RISK OF FIRE, BURN HAZARD OR OTHER INJURY.

Safety Precautions

1) NEVER LEAVE THE GRILL UNATTENDED WHILE COOKING.

2) Avoid wearing loose-fitting garments or long sleeves while using the grill. Never touch the grill racks, hood or immediate surrounding metal surfaces with your bare hands as these areas become extremely hot during use and could cause burns.

3) Use an insulated glove or mitt when opening and operating the grill. Open grill lid slowly to allow heat and smoke to escape before fully opening.

4) Never lean over hot grill surface or look directly into the grill when attempting to light. The grill hood must be fully opened when lighting.

5) Do not heat unopened food containers as pressure build-up may cause container to burst.

6) Do not use aluminum foil to line grill racks or drip pans. This will alter combustion airflow or trap excessive heat in the control area. This can result in melted knobs and ignition modules. These damages are specifically excluded from your warranty.

7) Never use charcoal in the grill.

8) Never operate the grill in a windy area. If windy conditions exist, install a suitable windbreak (see page 2 for details).

9) Be aware that cooking excessively fatty meats and other such products will cause flareups. Internal fires or damage caused by flare-ups or the grill being left unattended while cooking, are not the responsibility of LYNX and any resulting damage is not covered under the terms and conditions of our warranty.

10) Never grill without the drip pan in place. The drip pan must be pushed all the way to the back of the grill. Without the drip pan in place, hot grease could leak downward and produce a fire or explosion hazard.

11) Grease is extremely flammable. Let hot grease cool down before attempting to handle or dispose of it. The drip tray should be cleaned of grease on a regular basis.

12) Do not use the grill until a leak check has been performed (see page 11).

13) Do not operate grill under the influence of alcohol or drugs.

14) If equipped, never place more than 30 pounds on a side shelf. Do not lean on shelves.

15) If any burner does not light or goes out during operation, turn off all gas control knobs with hood open and wait five (5) minutes before attempting to re-light.

16) Prior to using grill ensure that all tie down wires have been removed from burners.

WARNING

Spiders and insects can nest in the burners of this or any other grill, and cause gas to flow from the front of the burner. This is a very dangerous condition which can cause a fire to occur behind the valve panel, thereby damaging the grill and making it unsafe to operate.

If your grill has been stored or unused for a prolonged period, it is recommended that the burners be removed, inspected, and cleaned if needed according to the instructions on page 19.

Leak Testing

To Perform Leak Test

1) Create a soapy solution of equal parts mild dishwashing detergent and water.

2) Confirm that all control knobs are in the off position.

3) Turn on fuel supply. For natural gas, turn valve handle 1/4 turn to align with gas flow. For L.P., turn cylinder valve knob counter clockwise one full rotation.

4) Apply soap solution generously by paint brush or squirt bottle on all connections and fittings, as indicated in figures 1 and 2.

5) If "growing" bubbles appear on any of the connection points, then you have detected a gas leak. IMMEDIATELY turn off the gas supply by reversing step 3.

Fixing a Gas Leak

1) After shutting off gas supply, push in and turn on control knobs to release pressure, then turn the knobs back to off.

2) Wash off soapy solution with cold water and towel dry.

3) Stop a leak by tightening the loose joint, or by replacing the faulty part with a replacement part recommended by the manufacturer. DO NOT attempt to repair the L.P. cylinder valve if it should become damaged; the cylinder MUST BE REPLACED.

4) Perform a new leak test to ensure that no leaks are present.

CAUTION - DANGER

To prevent fire or explosion hazard, DO NOT use or permit sources of ignition in the area while performing a leak test. Perform leak test outdoors only. Never perform a leak test with fire or flame. DO NOT SMOKE WHILE PERFORMING THE LEAK TEST!

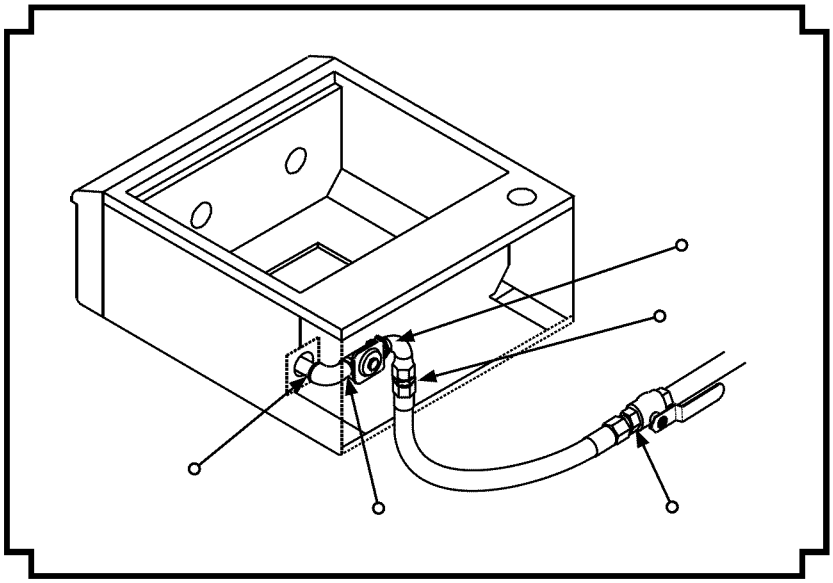

Figure 11-1 - *Leak testing points when using natural gas.*

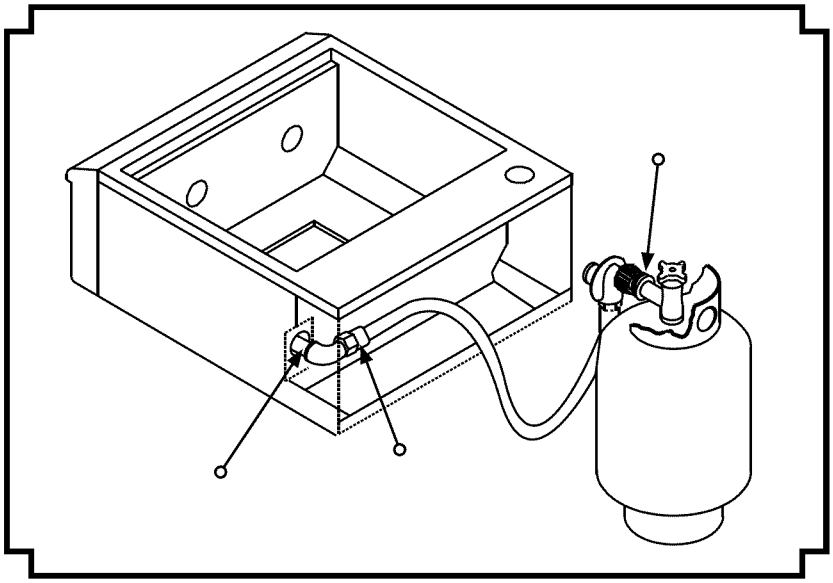

Figure 11-2 - *Leak testing points when using L.P. gas.*

Model Identification

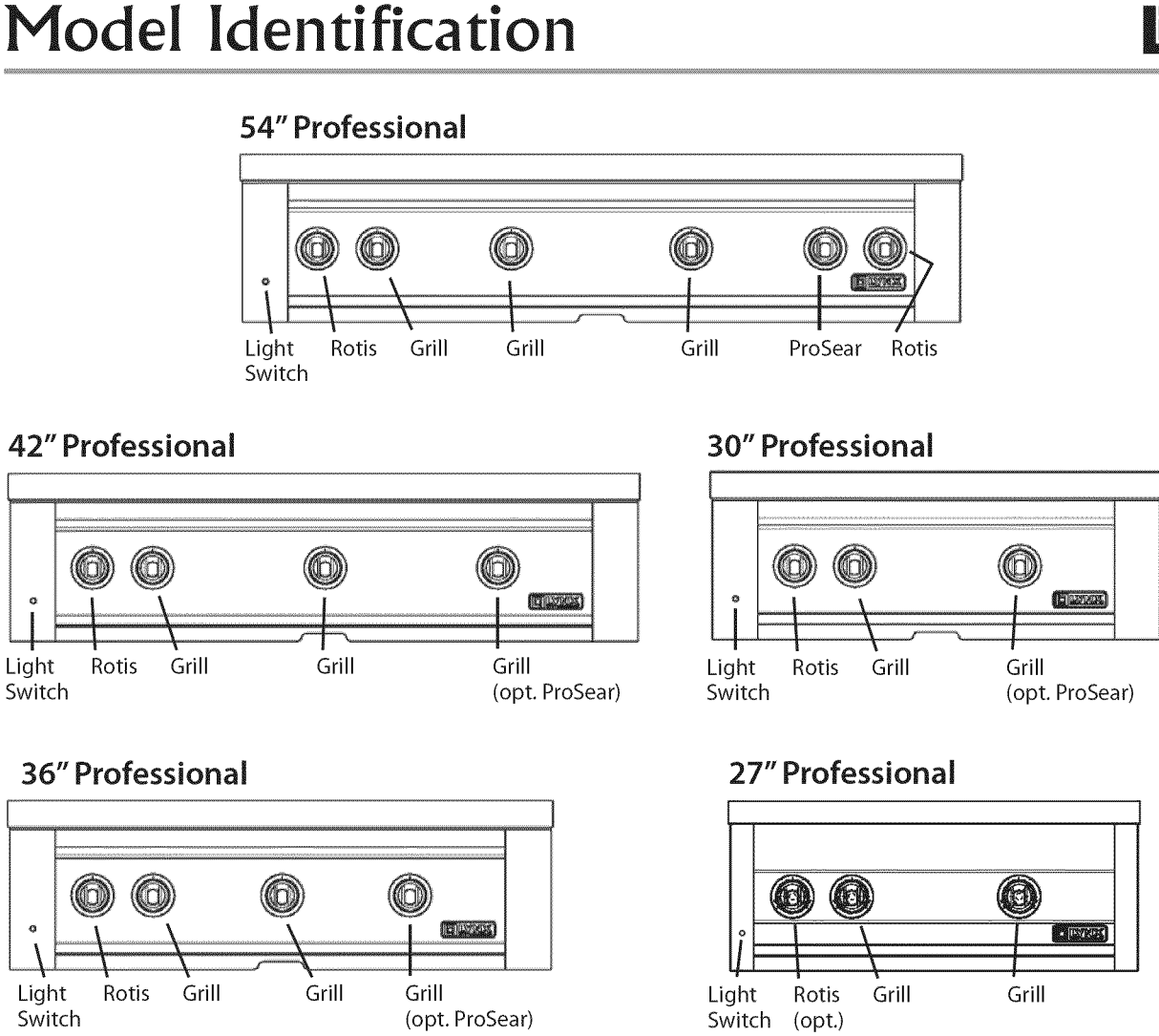

BURNER TYPE IDENTIFICATION

Depending on the model, your Lynx grill may be equipped with up to three different burner types. The operation of each burner type varies, so it is important to familiarize yourself with all three.

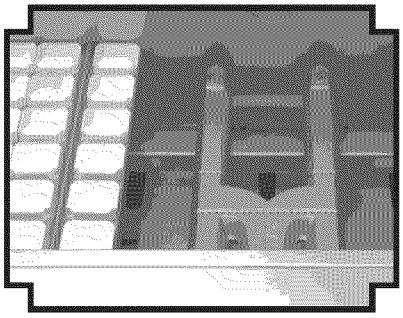

Brass - *This is the standard main grill burner found under the briquette trays*

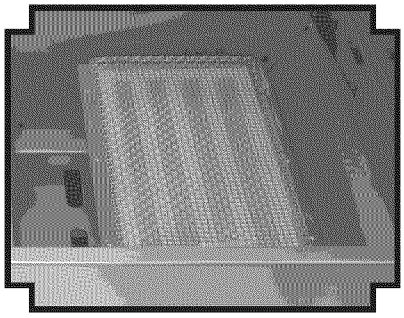

ProSear - *This is a high intesnity infrared burner that is optional on most models.*

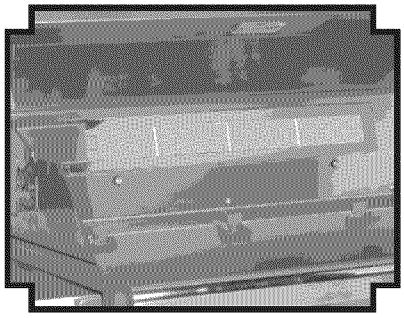

Rotis - *This is an infrared burner found in the rear of the grill above the grill racks.*

Using the Grill

Grilling requires high heat for searing and proper browning. Most foods are cooked at the "HI" heat setting for the entire cooking time (with the lid open). However, when grilling large pieces of meat or poultry, it may be necessary to turn the heat to a lower setting after the initial browning. This cooks the food through without burning the outside. Foods cooked for a long time or foods basted with a sugary marinade may need a lower heat setting near the end of the cooking time.

HOW TO SEAR

Searing locks in flavor and juices while allowing the outer surface to absorb smoke and food aroma that is produced as grease and drippings are vaporized by the burner. The result is a crisp, flavorful outside with a tender, juicy inside. While the brass burners in your grill are capable of producing searing heat, the ProSear infrared burner is specifically designed for this purpose.

1) Properly pre-heat the grill by following the lighting instructions on pages 14-15.

2) Leaving the burners set to "HI", place food on grill grids for 2-3 minutes per side, or until food is easily turned without sticking.

3) Adjust the burners to a lower setting and continue cooking until desired doneness is reached, turning the food as needed.

INDIRECT COOKING

Indirect cooking is achieved by placing the food only on one side of the grill. Leave the burner below the food "OFF" and an adjacent grill burner on "HI". Keep the hood closed as much as possible and regulate the heat with the burner control, monitoring internal temperature with the hood thermometer (if equipped).

1) Properly pre-heat the grill by following the lighting instructions on pages 14-15.

2) Once grill has been preheated, turn off any burners not required for cooking. The lid should be closed as much as possible while using the indirect method.

3) Place the food on the grill and cook to the desired doneness. Adjust heat setting as required to maintain desired temperature.

WARNING

Never place food over a ProSear burner that is not lit and pre-heated. Food particles and grease dripping onto a cold ProSear burner can clog ports and damage the ceramic burner. This damage is not covered by your warranty.

PRE-GRILLING CHECKLIST

Before lighting the grill, perform the following checks to ensure safe operation:

- ☐ **Specified clearances maintained to combustibles?**
- ☐ **All internal packaging removed?**
- ☐ **Knobs turn freely?**
- ☐ **Pressure regulator connected to proper gas type?**
- ☐ **Unit is leak tested and free of leaks?**
- ☐ **User informed of gas supply shut off valve location?**
- ☐ **Burners are sitting properly on orifices?**
- ☐ **Wind is not blowing too strongly and/or hitting back of grill?**

Once these checks are complete, you are ready to begin using your grill.

Lighting the Brass Burners

WARNING

Never attempt to light grill if odor of gas is present. Hood must be open when lighting. Keep face and body as far from grill as possible when lighting. Always wait at least 5 minutes before attempting to relight a hot burner.

Before proceeding, make sure you have completed the checklist on the previous page. These checks should be performed before each use of the grill.

Follow these steps to light the main brass grill burners:

1) Open hood completely. Do not attempt to light grill with the hood closed.

2) Check to ensure that all burner control knobs are set to OFF. Test ignition system by pressing control knob in and listening for clicking sound of igniter. If no sound occurs, proceed with troubleshooting or match-light the burner.

3) Turn on main gas supply. Purge if needed (see page 9).

4) Push in and turn burner control knob to LITE. Hold knob in for 5 seconds.

5) If burner does not light, turn knob to OFF, wait 5 minutes to allow gas to dissipate, and repeat step 4 above.

PREHEATING THE GRILL

Before cooking, always preheat the grill for best results. To preheat the grill, light all main burners and set to HIGH. Close the grill hood and allow to preheat for 10-15 minutes, or until the temperature reaches 450°F.

After preheating, turn off all burners not required, carefully open the hood, and adjust remaining burners to desired cooking temperature.

DO NOT LEAVE THE GRILL UNATTENDED DURING THE PREHEAT CYCLE OR AT ANY TIME WHILE THE GRILL IS IN USE. DO NOT ALLOW GRILL TO PREHEAT FOR PROLONGED PERIODS OF TIME. OVERHEATING THE GRILL CAN CAUSE DAMAGE TO THE GRILL AND PERSONAL PROPERTY.

MATCH LIGHTING

If burners will not light after several attempts, the burners can be match lit. If you've just attempted to light the burner with the igniter, allow 5 minutes for any accumulated gas to dissipate.

Make sure all knobs are in the OFF position. Keep your face as far away from the grill as possible. With the hood open, pass the alternate lighting rod with a lit paper match installed to the ports of the burner. Push and turn the corresponding control knob of the burner to LITE. If the burner does not light in 4 seconds, turn the knob off and wait 5 minutes before attempting again.

LOW HEAT ADJUSTMENT

The valves on the grill feature an adjustable low setting. Due to fluctuations in gas pressure, heating value or gas conversion, you may feel it necessary to adjust gas flow in the low position. Do not adjust the infra-red rotis or ProSear burners.

1) Light the burner.

2) Turn the control knob to the lowest setting (all the way counter-clockwise).

3) Remove the knob.

4) While holding the valve shaft with pliers, insert a thin flat tipped screwdriver into the shaft and while viewing the burner, adjust to a minimum stable flame (see figure 14-1).

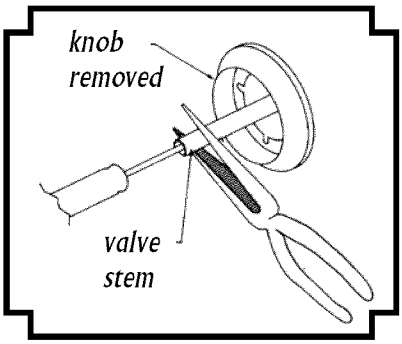

Figure 14-1 - *Adjusting brass burner low heat setting.*

Using the ProSear Burner or Pod

The ProSear burner has some special components and warnings specific to its design. Be sure to read this section completely before using your ProSear.

SAFETY PRECAUTIONS

1) Do not light the grill until you have carefully read and understand the lighting instructions.

2) Ensure that burner ties and packing materials are removed before lighting the burners.

3) Special care should be exercised to avoid dropping any liquids on the hot burners when cleaning the cooking grids.

4) The cooking grids are heavy. **Extra caution must be used when removing or replacing the cooking grids.** The tiles within the IR burner(s) will be permanently damaged if a cooking grid or other object comes into contact with them. Such damage is not covered by the product warranty and may cause a fire, burns or other injury.

WARNING

Do not allow water to spill on the IR burners. Never allow water to contact the hot burners. Never use water to control flare-ups. Water contact will damage the burners and is not covered by the warranty.

LIGHTING THE PROSEAR

1) Open hood completely. Do not attempt to light grill with the hood closed.

2) Check to ensure that all burner control knobs are set to OFF. Test ignition system by pressing control knob in and listening for clicking sound of igniter. If no sound occurs, proceed with troubleshooting or match-light the burner (see previous page).

3) Turn on main gas supply. Purge if needed (see page 9).

4) Push in and turn burner control knob to LITE. Hold knob in for 5 seconds.

5) If burner does not light, turn knob to OFF, wait 5 minutes to allow gas to dissipate, and repeat step 4 above.

The ProSear burner is ready to use when it glows red, usually 2-3 minutes after lighting.

PROSEAR IR SIDE BURNER & POD ONLY

For installation and hook-up, refer to the manual supplied with the unit. Follow these instructions for use.

Allow unit to cool completely before grasping handle to lower lid. Handle may be hot.

In windy conditions, remove the lid from the unit by releasing latch at rear and sliding out of remaining hinge pin.

Keep lid closed when not in use.

BURNER CLEANING

After each use, it is important to operate the ProSear burners on "HI" with the hood open to burn away any food particles or drippings. Operate the burners on "HI" for 5 minutes.

Some ash may accumulate on the burner surface over time. Ocassionly, you should brush, blow or vacuum this debris from the surface of the burner. Only perform this operation when the burners are completely cool.

Every 3 to 6 months, inspect the burner venturi (inlet) to ensure there are no obstructions. If any obstructions can be seen, then follow the burner cleaning procedure on page 19.

COLD WEATHER WARNING FOR L.P. UNITS

If lighting the main IR burners in extremely cold conditions, there may be a possibility of 'burn back'. Once lit, if you hear a 'whooshing' sound, immediately turn the burner knob off to extinguish the flame. Wait several minutes before attempting to relight the burner.

Using the Rotisserie

The rotisserie system consists of three main parts - the motor, the skewer which holds the food, and the infrared rotis burner. The rotisserie evenly cooks large cuts of meat by turning them continuously in front of a high-intensity burner. The rotis is capable of turning up to a 25 lb. cut of meat.

THE MOTOR

The rotisserie motor runs on 12 volt DC power that is supplied by the grill. To power the motor, plug the "L" shaped jack of the power cord into the motor, and plug the other end into the jack provided on the left side of the grill (see figure 16-1). This hook-up allows for simple installation and removal of the motor for storage when not in use.

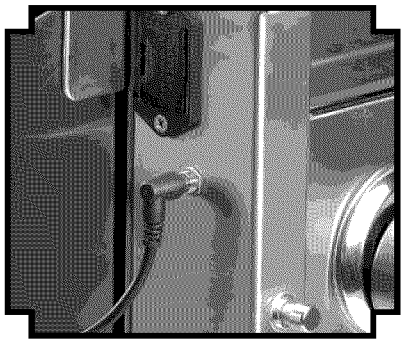

Figure 16-1 - *Rotis motor power jack located on grill*

NOTE: The grill must be connected to 115 volt AC power as described on page 7 for the rotis motor to function.

Install the motor onto the grill by sliding it onto the bracket located on the left side of the grill.

THE SKEWER

To load the skewer, slide one of the meat holders onto the skewer. Push the skewer through the center of the food, then slide the second meat holder onto the skewer. Center the food to be cooked on the skewer then push the meat holders firmly together. Tighten the thumb screws (use pliers if necessary). It may also be necessary to wrap the food with butchers string (never use nylon or plastic string) to secure any loose portions.

Remove the warming rack and, if needed, remove the grill racks and briquette trays to gain better clearance. It is normal for the skewer to flex when cooking large foods. Place a basting pan beneath the food for basting and to ease cleaning.

Never operate a grill burner with a basting pan in place.

The skewer for the rotis is assembled into the motor assembly by placing the pointed end into the motor, and resting the short, round end (threaded end on 27" models) onto the support at the opposite side of the grill. With the skewer pushed into the motor, it should rest on the bracket.

The Lynx rotisserie features dual positions to accomodate larger cuts of meat or to allow slower cooking (see figure 16-2). Any food to be cooked should be a minimum of 2" from the surface of the infrared burner.

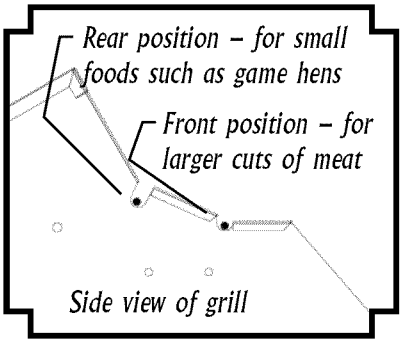

Figure 16-2 - *Dual position rotisserie system.*

THE INFRARED BURNER

The location of the rotis burner makes it more susceptible to strong wind conditions (more so than the main grill burners). For this reason you should avoid operating the rotis during windy conditions. As an added safety feature, the burner is equipped with an automatic safety valve which will not allow gas to flow to the rotis burner if it is not properly lit. To light the rotis burner, follow this procedure:

1) Open hood completely. Do not attempt to light grill with the hood closed.

2) Load food onto skewer, and install motor and skewer onto grill in desired cooking position.

3) Check to ensure that all burner control knobs are set to OFF. Test ignition system by pressing Rotis control knob in and listening for clicking sound of igniter. If no sound occurs, proceed with troubleshooting or match-light the burner.

continued...

4) Turn on main gas supply. Purge if needed (see page 9).

5) Push in and turn burner control knob to LITE. Hold knob in for 30 to 60 seconds.

6) If burner does not light, turn knob to OFF, wait 5 minutes to allow gas to dissipate, and repeat step 5 above.

Once lit, the rotis burner should reach cooking temperatures in about 1 minute. The glow will even out in about 5 minutes.

If the burner will only stay lit with the control knob depressed, the thermocouple position may need to be adjusted (see figure 17-1) to ensure proper function.

To adjust, ensure that only the last 1/4 to 1/2" of thermocouple extends over ceramic and that it is located close to the surface.

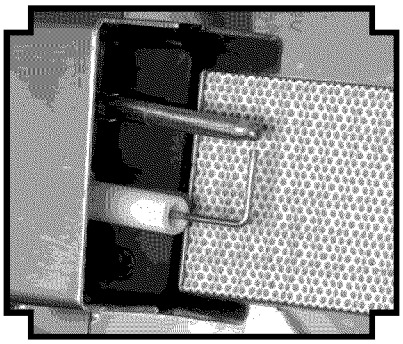

Figure 17-1 - *Proper rotis thermocouple position.*

NEVER ATTEMPT TO ADJUST WHEN THE BURNER IS HOT.

MATCH LIGHTING

If the electronic ignition system fails to light the burner, it can be match lit according to the procedure found on page 9.

Always use basting pan under the rotisserie to keep drippings off the burners and briquettes. Never operate main grill burners with basting pan in place. Allow to cool completely before removing from grill.

Using the Smoker Box

By adding wood smoke to the grilling process, meats and vegetables will have a more traditional BBQ flavor. In order to use the smoker box, remove the first set of grill racks and set the smoker box in the opening so that the front and rear tabs rest on the grill frame, and replace grill rack.

WARNING
Never use smoker box over a ProSear burner.

Wood Chips

There are many wood chips available and selection is based on personal taste. The most common chips used are mesquite or hickory. Always soak the chips in water prior to putting them into the box. Use the High position to start the chips smoking, then reduce the heat to a lower level to prevent them from drying out and flaming. If the wood chips do flame up, add a small amount of water through the recessed hole in the lid to extinguish the flame. Use caution when adding water to a hot box to avoid steam burns. This tray may also be filled with water to produce steam.

Whether smoking or steaming, the grill should remain closed as much as possible to maximize the effect. During extended roasting periods, it is normal to add fresh wood chips and water to the box several times. Limit the amount of times the hood is opened, as each opening can add as much as 15 minutes to the cooking time.

CAUTION: Handle the smoker box with care. The cover becomes extremely hot when in use. Use sturdy, properly insulated gloves or dry potholders.

It is recommended that a high quality meat thermometer be used when smoking, as cooking times can vary greatly by cut of meat or environmental factors.

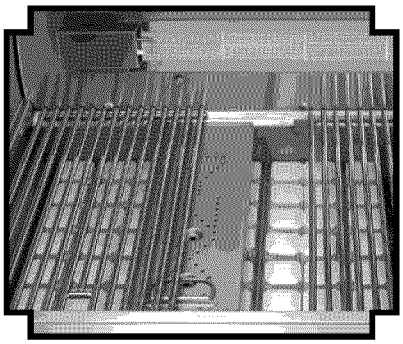

Figure 17-2 - *Smoker box installed into grill for use.*

Cleaning the Grill

The best way to keep your grill looking great is to use a cover, supplied by Lynx, when the grill is not in use. While stainless steel is very durable, some care is required to ensure the long life of your grill.

STAINLESS STEEL

Your grill has a directional polished grain - any cleaning should be carried out along this grain and not across it.

The grill is made from non-rusting and non-magnetic stainless steel. After initial usage, areas of the grill may discolor from the intense heat given off by the burners - this is normal. There are many different stainless steel cleaners available. Always use the mildest cleaning procedure first, scrubbing in the direction of the grain. To touch up noticeable scratches in the stainless steel, sand very lightly (at your own risk) with dry 100 grit emery paper in the direction of the grain. Specks of grease can gather on the surfaces of the stainless steel and bake on to the surface and give the appearance of rust. To aid removal, use a fine to medium grit non-metallic abrasive pad (Scotch Brite is good) in conjunction with a stainless steel cleaner. Always rub in the direction of the grain.

The best maintenance for stainless steel is to wipe it down with a damp cloth. This is especially true if a swimming pool is located near the grill, as prolonged contact with chlorinated water can pit the stainless steel. This damage is not covered by your warranty. Never use steel "Brillo" pads or similar products as these will leave traces of material behind which will quickly rust and is not a defect in the Grill.

GRILL RACKS

The easiest way to clean the grill racks is to do so immediately after cooking and turning off the burners. Wearing a long BBQ mitt to protect your hand from steam, dip a brass bristle brush in hot water and scrub the grill rack. Dip the brush frequently as the steam aids the cleaning process. If grill is allowed to cool before cleaning, cleaning will be more difficult.

NEVER USE WATER TO CLEAN THE GRILL RACK ABOVE A PROSEAR BURNER. LIQUID FALLING ONTO AN UNLIT PROSEAR BURNER CAN CAUSE PERMANENT DAMAGE. THE GRILL RACK ABOVE THE PROSEAR WILL NORMALLY BURN CLEAN DURING THE 5 MINUTE CLEANING BURN AFTER USE. IF GRILL RACK REQUIRES FURTHER CLEANING, ALLOW TO COOL AND REMOVE FROM GRILL.

DRIP TRAY

The drip tray should be cleaned after every use of the grill.

DO NOT ALLOW EXCESS GREASE OR LIQUIDS TO ACCUMULATE IN THE DRIP TRAY AS THIS MAY CREATE A FIRE HAZARD.

Allow the grill to cool completely, then remove the drip tray by pulling it out from the grill until it stops, then lifting the front edge until the drip tray comes free. Clean with hot soapy water or commercial cleaning product, rinse, dry and reinstall in grill.

NEVER USE GRILL WITHOUT DRIP TRAY PROPERLY INSTALLED.

BRIQUETTE TRAYS

Although they normally burn clean with use, it may occassionally be necessary to clean the briquette trays. After allowing the grill to cool completely, remove the grill racks, then remove the briquette trays by lifting the front edge and pulling toward you. Set the trays upside-down onto their mounting points, and operate the grill burners on high for 20-30 minutes to burn the briquettes clean. If it becomes necessary to replace any or all the briquettes, replacements are available from your dealer. Replace briquettes following the instructions on page 6.

WARNING

Always keep the area surrounding the grill free from all combustible materials, liquids, vapors, debris and obstructions. Maintain at least 3" clearance around grill for proper airflow.

Burner Cleaning & Adjustment

Before removing burners ensure the gas supply is off and the knobs are in the "off" position. Make sure the grill has completely cooled before proceeding.

To Remove Brass Burners:

Remove the grill racks and briquette trays. Grasp the burner, pull it up and slightly to the rear of the unit so the burner head comes off the brass orifice at the front. Angle the burner sideways, and remove. Be careful not to upset the air shutter position.

Brass Burner Cleaning:

Clean the exterior of the burner with a wire brush. Clear stubborn scale with a metal scraper. Clear any clogged ports with a straightened paper clip. Never use a wooden toothpick as it may break off and clog the port. Shake out any debris through the air shutter. Use a flashlight to inspect the burner inlet to ensure it is not blocked. If obstructions can be seen, use a metal wire coat hanger that has been straightened out to clean.

Brass Burner Air Adjustment

Each grill burner is tested and adjusted at the factory prior to shipment; however, variations in the local gas supply or a conversion from one gas to another may make it necessary to adjust the burners. The flames of the Grill burners should be visually checked and compared to fig. 19-1. Flames should be blue and stable with no yellow tips, excessive noise or lifting. If any of these conditions exist, check if the air shutter or burner ports are blocked by dirt, debris, or spider webs. If needed, proceed with air shutter adjustment.

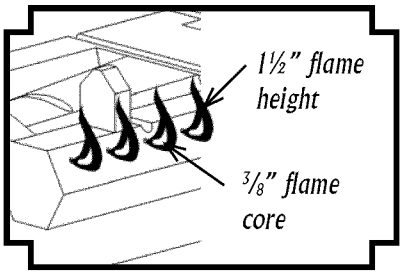

Figure 19-1 - *Showing proper flame characteristics.*

The amount of air which enters a burner is governed by a sheet metal disk at the inlet called an air shutter. It is locked in place by a set screw which must be loosened prior to lighting the burner for adjustment (see fig. 19-2).

To Adjust:

1) Be extremely careful as the burner may be very hot.

2) If the flame is yellow, indicating insufficient air, turn the air shutter counterclockwise to allow more air to the burner.

3) If the flame is noisy and tends to lift away from the burner, indicating too much air, turn the air shutter clockwise.

4) Once adjusted, turn the burner off and allow to cool. Remove burner, tighten set screw and reinstall the briquette trays and grill racks.

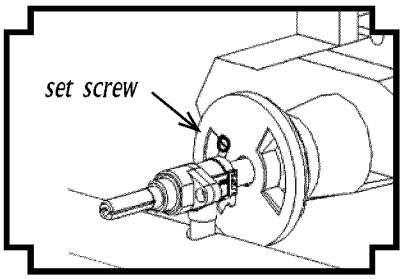

Figure 19-2 - *Air shutter set screw location on burner*

PROSEAR BURNER

For day-to-day cleaning, see instructions on page 15. If burner inlet is obstructed, use a metal wire coat hanger that has been straightened out to clean.

WARNING

IT IS CRITICAL TO CENTER EVERY BURNER ON ITS ORIFICE AND FOR THE BURNERS TO REST LEVEL AND NOT ROCK. IF THE BURNERS ARE NOT CENTERED CORRECTLY, A VERY DANGEROUS CONDITION EXISTS THAT CAN CAUSE PERSONAL INJURY AND DAMAGE TO THE UNIT.

Troubleshooting

If the Grill does not function properly, use this checklist before contacting Lynx for service.

GRILL WON'T LIGHT

Determine if the spark igniters are functioning properly by listening for a rapid clicking sound when the control knob is depressed. If no sound is heard, check the electrical connections or try replacing the igniter battery according to the instructions on page 7. If the power is OK, ensure that there is a proper gap of approximately 1/8" between the burner and electrode wire.

If the spark igniters are working correctly, next determine if gas is reaching the burners. Ensure the gas supply is turned on, and that there are no leaks, according to the procedure on page 6. Attempt to match-light a burner according to the procedure on page 11. If the burner will light with a match, then the spark igniter may not be functioning correctly, or may not be adjusted correctly. See above or call for service. If the burner will not match light, and the gas supply has been confirmed, check the burner for blockages according to the procedure on page 19.

YELLOW FLAME/GAS SMELL

IF YOU SMELL GAS WHILE THE GRILL IS OPERATING, IMMEDIATELY TURN OFF ALL BURNERS. Perform a leak test, check for blockages and check the air shutter adjustment according to page 19.

NOTE: If the grill is operating in a dusty area or if heavy grease is present, some orange tips on the burner flame are normal.

LOW/INSUFFICIENT HEAT

Ensure that adequate preheat time has elapsed. Brass burners should preheat for at least 15 minutes with the hood closed; ProSear burners should preheat for at least 3 minutes.

If adequate preheat time was allowed, check the gas supply for a damaged and/or kinked supply line. Replace if necessary. On LP units, a mostly empty tank may not have sufficient pressure to run the grill at high heat. Replace with a full tank. Make sure that the regulator/hose assembly being used is the unit supplied with the grill. On natural gas units, ensure that the supply line is at least 3/4" diameter. Check the gas supply pressure to ensure at least 7" W.C. (0.25 psi) for natural gas, 11" W.C. (0.4 psi) for LP.

If gas supply is adequate, check burners for blockages and check flame characteristics according to the procedure on page 19 and clean or adjust air shutter if needed. Check also that there is no pressure being applied to the regulator attached to the back of the grill. This regulator contains a flexible diaphragm and should not be allowed to touch the grill body or surroundings.

Check to make sure that the burners and the drip tray are clean and free from obstructions. Clean if necessary. NOTE: No part of the grill should ever be lined with aluminum foil as it will interfere with airflow and can cause a low heat condition.

BURNER BLOWS OUT

First determine if the problem is being caused by location. If location is subject to high winds, reposition grill to provide some protection. Check the gas supply and flame characteristic according to the procedure under Low/Insufficient Heat. Check to ensure that the burners are correctly positioned in the grill according to the procedure on page 19. Correctly installed burners should be seated firmly with no side-to-side movement.

ROTISSERIE WON'T LIGHT

Follow the same procedure as described above for the grill burners to diagnose problems with the Rotisserie IR burner. The IR burner flame may be hard to see in bright sunny conditions.

LIGHTS WON'T OPERATE

Ensure that the grill has AC power by removing the 9V battery according to the instructions on page 7, and then pressing a burner control knob to test the spark igniter. If the igniters don't function, no AC power is connected. If the igniters do function, replace the bulb.

How to Obtain Service

Before you call for service:

1) Is there Gas Supplied to the Grill?

2) Is there a power outage in the area (lights will not work)?

3) Have you recently refilled the LP Tank?

Before calling for service, please make sure you have the following information:

1) Model number

2) Date of purchase

3) Proof of purchase by the original owner

4) Serial number. The serial number can be located on the rating plate, which is located either under the drip tray, on the heat shield behind the front panel, or on the inside left cabinet wall (for most free-standing grills).

For warranty service, contact your local LYNX authorized service agency. Provide him with the Model Number, Serial Number, date of installation, and a brief description of the problem. If you need assistance in locating the authorized service agency in your area please contact our LYNX Customer Service Department for an authorized service agent near you. Our number is (888) Buy-Lynx (888-289-5969).

Your satisfaction is of the utmost importance to us. If a problem cannot be resolved to your satisfaction, please write, fax or email us:

Lynx Professional Grills

6023-25 Bandini Blvd., Commerce, CA 90040

Service: (888) Buy-Lynx (888-289-5969)

Tel: (323) 838-1770

Fax: (323) 838-1778

www.lynxgrills.com

Contact Lynx as well for replacement parts. Parts are shipped F.O.B. Commerce, CA.

IF SHIPMENT ARRIVED DAMAGED:

1) VISIBLE LOSS OR DAMAGE: Be certain this is noted on freight bill or express receipt and signed by person making delivery.

2) FILE CLAIM FOR DAMAGES IMMEDIATELY, regardless of extent of damage.

3) CONCEALED LOSS OR DAMAGE: If damage is unnoticed until merchandise is unpacked, notify transportation company or carrier immediately and file "concealed damage" claim with them. This should be done within (15) days of date delivery is made to you. Be sure to retain container for inspection. We cannot assume responsibility for damage or loss incurred in transit.

Warranty

I. Limited Lifetime Warranty. The stainless steel body housings, the solid brass grill burners and the ProSear burners* are warranted to be free from defects in material and workmanship when subjected to normal domestic use and service for the lifetime of the original purchaser. This warranty excludes surface corrosion, scratches, and discoloration which may occur during regular use. This warranty is limited to the replacement of the defective parts. **Does not include the rotisserie infra-red burner.*

II. Limited Five-Year Warranty. The structural integrity of the interior grill parts, exterior, and drip pans are warranted to be free from defects in material and workmanship, when subjected to normal domestic use and service, for a period of five years from the date of purchase. This warranty is limited to the replacement of the defective parts.

III. Limited One-Year Warranty. All other grill components are warranted to be free from defects in material and workmanship for a period of one year from the original date of purchase. Lynx will replace or repair parts found to be defective at no cost to the original purchaser.

IV. Limitations & Exclusions

1) Warranty applies only to the original purchaser and may not be transferred.

2) Warranty is in lieu of all other warranties, expressed or implied and all other obligations or liabilities related to the sale or use of its grill products.

3) Warranty shall not apply and Lynx is not responsible for damage resulting from misuse, abuse, alteration of or tampering with the appliance, accident, hostile environment, flare-up fires, improper installation, or installation not in accordance with the instructions contained in this manual, or the local codes.

4) Lynx shall not be liable for incidental, consequential, special or contingent damages resulting from its breach of this written warranty or any implied warranty.

5) Some states do not allow limitations on how long an implied warranty lasts, or the exclusions of or limitations on consequential damages. This warranty gives you specific legal rights and you may have other rights which vary from state to state.

6) No one has the authority to add to or vary Lynx's warranty, or to create for Lynx any other obligation or liability in connection with the sale or use of its products.

V. What is not covered. Lynx shall not be responsible for and shall not pay for the following:

1) Installation or start-up, damages or problems caused by improper installation or use;

2) Service by an unauthorized service provider;

3) Damage or repair due to service by an unauthorized service provider or use of unauthorized parts;

4) Units installed in non-residential applications such as day-care centers, bed and breakfast centers, churches, nursing homes, restaurants, hotels, schools, etc.;

5) To correct normal adjustments or settings, due to improper installation, commissioning or local gas supply properties;

6) Shipping and handling costs, export duties, installation, removal, or re-installation cost;

7) The cost of a service call to diagnose trouble.

See previous page for information on how to obtain warranty service.