This Owner's Manual is provided and hosted by Appliance Factory Parts.

Appliance Factory Parts
Experts in BBQ, Humidifier, & Appliance Parts
1-800-955-7075

Coleman 5453-700 Owner's Manual

Shop genuine replacement parts for Coleman 5453-700

Find Your Coleman Camping Parts - Select From 855 Models

-------- Manual continues below --------

Propane Stove

INSTRUCTIONS FOR USE

U.S. and other Patents Pending

© 2004 The Coleman Company, Inc.
www.coleman.com

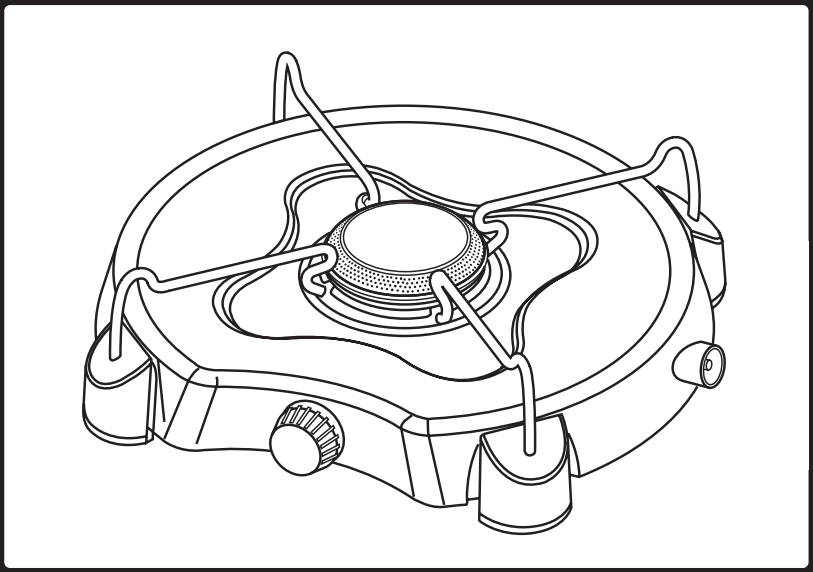

Model 5453 Series

IMPORTANT

Read this manual carefully before assembling, using or servicing these stoves. Keep this manual for future reference. If you have questions about assembly, operation, servicing or repair of these stoves, please call Coleman at 1-800-835-3278 or TDD: 316-832-8707. In Canada call 1-800-387-6161.

ANSI Z21.72b-CSA 11.2b (2002) Camp Stove

Contents

General Safety Information	2-4
To Set Up	5
To Light	6
To Turn Off	6
To Store	7
To Clean	7
Things You Should Know	8
Parts List	8
Warranty	9

General Safety Information

FOR YOUR SAFETY

If you smell gas:
1. Do not attempt to light appliance.
2. Extinguish any open flame.
3. Disconnect from fuel supply.

FOR YOUR SAFETY

Do not store or use gasoline or other liquids with flammable vapors in the vicinity of this or any other appliance.

⚠ DANGER

• CARBON MONOXIDE HAZARD

- **This appliance can produce carbon monoxide which has no odor.**
- **Using it in an enclosed space can kill you.**
- **Never use this appliance in an enclosed space such as a camper, tent, car or home.**

This manual contains important information about the assembly, operation and maintenance of this propane stove. General safety information is presented in these first few pages and is also located throughout the manual. Particular attention should be paid to information accompanied by the safety alert symbol "⚠ DANGER", "⚠ WARNING", "⚠ CAUTION".

Keep this manual for future reference and to educate new users of this product. This manual should be read in conjunction with the labeling on the product.

Safety precautions are essential when any mechanical or propane fueled equipment is involved. These precautions are necessary when using, storing, and servicing. Using this equipment with the respect and caution demanded will reduce the possibilities of personal injury or property damage.

The following symbols are used extensively throughout this manual. Always heed these precautions, as they are essential when using any mechanical or propane fueled equipment.

⚠ DANGER

DANGER indicates an imminently hazardous situation which, if not avoided, will result in death or serious injury.

⚠ WARNING

WARNING indicates a potentially hazardous situation which, if not avoided, could result in death or serious injury.

⚠ CAUTION

CAUTION indicates a potentially hazardous situation which, if not avoided, may result in minor or moderate personal injury, or property damage.

⚠ DANGER

Failure to comply with the precautions and instructions provided with these stoves can result in death, serious bodily injury and property loss or damage from hazards of fire, explosion, burn, asphyxiation, and/or carbon monoxide poisoning.

Only persons who can understand and follow the instructions should use or service these stoves.

If you need assistance or information such as an instruction manual or labels, contact the Coleman Co., Inc.

⚠ DANGER

• EXPLOSION - FIRE HAZARD

• Never store propane near high heat, open flames, pilot lights, direct sunlight, other ignition sources or where temperatures exceed 120 degrees F (49°C).
• Propane is heavier than air and can accumulate in low places. If you smell gas, leave the area immediately.
• Never install or remove propane tank while outdoor stove is lighted, near flame, pilot lights, other ignition sources or while outdoor stove is hot to touch.
• During operation, this product can be a source of ignition. Never use the stove in spaces that contain or may contain volatile or airborne combustibles, or products such as gasoline, solvents, paint thinner, dust particles or unknown chemicals. Minimum clearances from combustible materials: 12 inches from the sides & 48 inches from the top.
• Provide adequate clearances around air openings into the combustion chamber.

⚠ WARNING

Not for home or recreational vehicle use.

We cannot foresee every use which may be made of our products. **Check with your local fire safety authority if you have questions about use.**

Other standards govern the use of fuel gases and heat producing products for specific uses. Your local authorities can advise you about these.

• Never refill disposable cylinders.
• Use the preset regulator that came with the stove. Do not attempt to adjust.

DANGER

• CARBON MONOXIDE HAZARD

• This stove is a combustion appliance. All combustion appliances produce carbon monoxide (CO) during the combustion process. This product is designed to produce extremely minute, non-hazardous amounts of CO if used and maintained in accordance with all warnings and instructions. Do not block air flow into or out of the stove.

• Carbon Monoxide (CO) poisoning produces flu-like symtoms, watery eyes, headaches, dizziness, fatigue and possibly death. You can't see it and you can't smell it. It's an invisible killer. If these symptoms are present during operation of this product **get fresh air immediately!**

• **For outdoor use only.**

• **Never use inside house, camper, tent, vehicle or other unventilated or enclosed areas. This stove consumes air (oxygen). Do not use in unventilated or enclosed areas to avoid endangering your life.**

WARNING

• This product is fueled by propane gas. Propane gas is invisible, odorless, and flammable. An odorant is normally added to help detect leaks and can be described as a "rotten egg" smell. The odorant can fade over time so leaking gas is not always detectable by smell alone.

• Propane gas is heavier than air and leaking propane will sink to the lowest level possible. It can ignite by ignition sources including matches, lighters, sparks or open flames of any kind many feet away from the original leak. Use only propane gas set up for vapor withdrawal.

• Propane gas should be stored or used in compliance with local ordinances and codes or with ANSI/NFPA 58. Turn off propane when not in use.

CALIFORNIA PROPOSITION 65:

WARNING: This fuel, and byproducts of combustion of this fuel, contain chemicals known to the state of California to cause cancer, birth defects, or other reproductive harm.

WARNING

• BURN HAZARD

• Never leave stove unattended when hot or in use.

• Keep out of reach of children.

CAUTION

• SERVICE SAFETY

• Keep all connections and fittings clean. Inspect propane cylinder and stove propane connections for damage before attaching.

• During set up, check all connections and fittings for leaks using soapy water. Never use a flame. Bubbles indicate a leak. Check that the connection is not cross-threaded and that it is tight. Perform another leak check. If there is still a leak, remove the cylinder and contact Coleman for service or repairs.

• Use as a cooking appliance only. Never alter in any way or use with any device or part not expressly approved by Coleman.

• Clean stove frequently to avoid grease accumulation and possible grease fires.

⚠ DANGER

• CARBON MONOXIDE HAZARD

• For outdoor use only.
• Never use inside house, camper, tent, vehicle or other unventilated or enclosed areas. This stove consumes air (oxygen). Do not use in unventilated or enclosed areas to avoid endangering your life.

Note: Use Coleman 16.4 oz disposable propane cylinders. The LP-gas cylinder(s) used with stoves must be constructed and marked in accordance with the specififcations for LP-gas cylinders of the U.S. Department of Transportation or *Transport Canada*, CAN/CSA B339.

■ Close burner valve firmly.

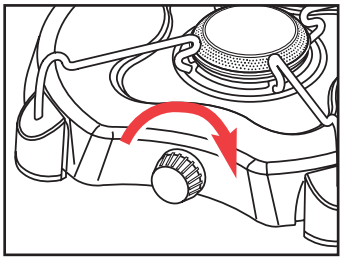

⚠ CAUTION

• SERVICE SAFETY

• Keep all connections and fittings clean. Inspect propane cylinder and stove propane connections for damage before attaching.
• During set up, check all connections and fittings for leaks using soapy water. Bubbles indicate a leak. Never use a flame.

■ Remove plastic cap from top of propane cylinder and screw propane cylinder into regulator hand tight.

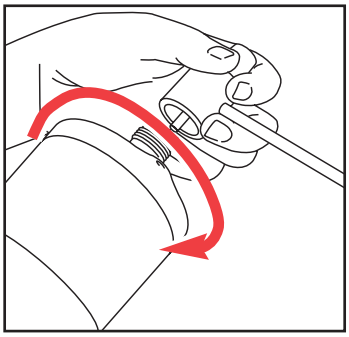

■ Screw regulator into stove hand tight.

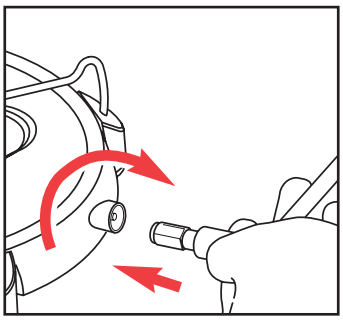

To Light

DANGER

• EXPLOSION - FIRE HAZARD

• Propane is heavier than air and can accumulate in low places. If you smell gas, leave the area immediately.
• Always attach or detach propane source outdoors; never while stove is lighted, near flame, pilot lights, other ignition sources or while stove is hot to touch.
• This stove is red hot during use and can ignite flammables too close to the burners. Keep flammables at least 12 inches from the sides and 48 inches from the top of the stove. Keep gasoline and other flammable liquids and vapors well away from stove.

WARNING

• BURN HAZARD

• Never leave stove unattended when hot or in use.
• Keep out of reach of children.

■ Hold lighted match near burner and open burner valve.

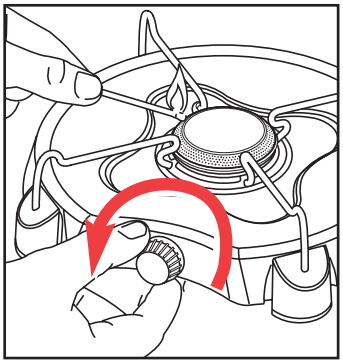

■ Adjust flame with burner valve.
■ Flame should be blue with hint of yellow on tips.

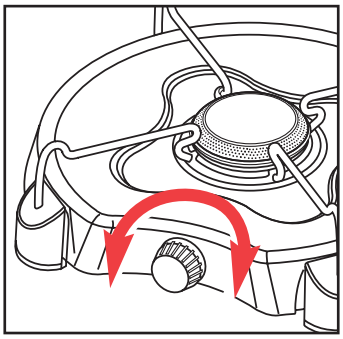

To Turn Off

■ Close burner valve firmly.

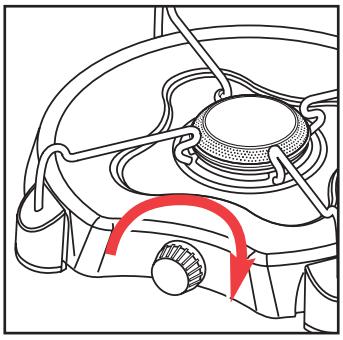

To Store

DANGER

• EXPLOSION - FIRE HAZARD

• Never store propane near high heat, open flames, pilot lights, direct sunlight, other ignition sources or where temperatures exceed 120 degrees F (49°C).

• Refillable propane tanks must always be stored outdoors in a well ventilated space. Never store propane tank in an enclosed area (house, garage, etc.). If stove is to be stored indoors, disconnect the propane tank for outdoor storage.

■ Remove propane cylinder from regulator and replace plastic cap on cylinder.

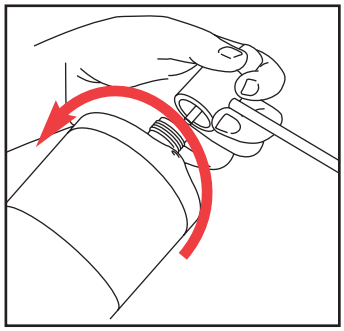

■ Unscrew regulator from stove.

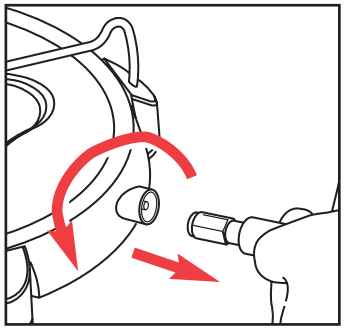

To Clean

■ Wipe clean with soft cloth and mild household cleaner. Do not use abrasives.

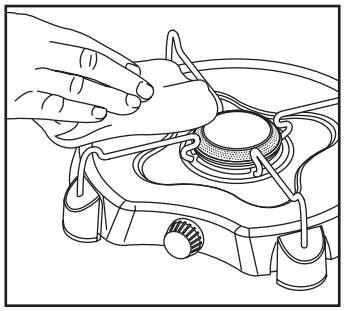

Things You Should Know

1. It is unsafe and illegal in some places to store or use propane cylinders of greater than 1.14 kg (2.5 lbs) water capacity (approximately 1 lb. propane) in occupied enclosures.
2. The usual storage areas for camping and picnic equipment are the basement, attic, or garage. To avoid the accumulation of dust, cobwebs, etc., that is common in these areas, place your stove in a plastic bag and seal it with a rubber band.
3. For repair service call one of the numbers on the front cover for location of your nearest Coleman Service Center. If a service center is not conveniently located, attach to the product a tag that includes your name, address, daytime telephone number and description of the problem. Carefully package the product and send either by UPS or Parcel Post **insured** with shipping and **insurance** prepaid to:

For products purchased in the United States:
The Coleman Company, Inc.
3600 North Hydraulic
Wichita, KS 67219

For products purchased in Canada:
Sunbeam Corporation (Canada) Limited
5975 Falbourne Street
Mississauga, Ontario
Canada L5R 3V8

4. If not completely satisfied with the performance of this product, please call one of the numbers listed on the cover of this manual.

Parts List

No.	Part Number	Description
1	5453-2351	Grate
2	5453-1351	Knob
3	5430-5651	Regulator Assembly
4	5453-3351	Foot Assembly
5	5453-1001	Carry Case (Model 5453-741 only)

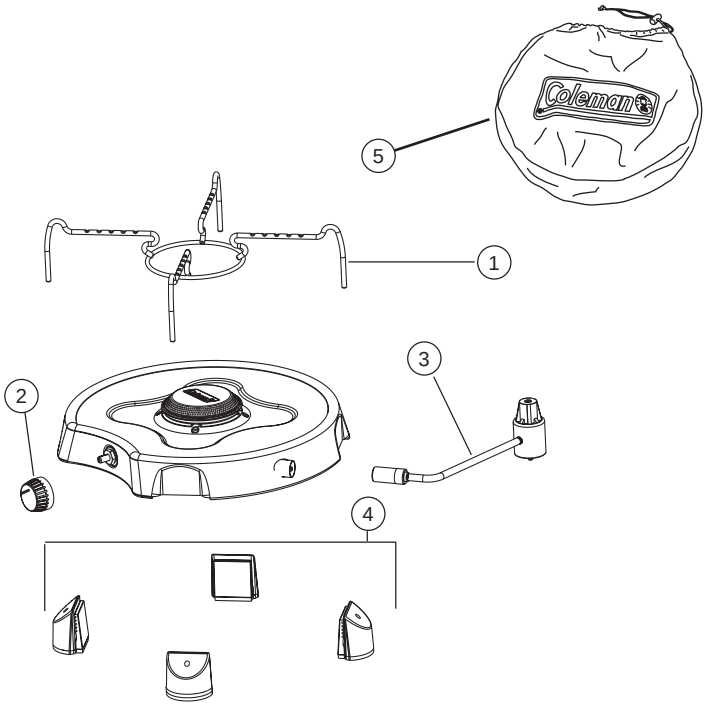

Limited Lifetime Warranty

The Coleman Company, Inc. ("Coleman") warrants that for the period that you own this product, it will be free from defects in material and workmanship. Coleman, at its option, will repair or replace this product or any component of the product found to be defective during the warranty period. Replacement will be made with a new or remanufactured product or component. If the product is no longer available, replacement may be made with a similar product of equal or greater value. This is your exclusive warranty.

This warranty is valid for the original retail purchaser from the date of initial retail purchase and is not transferable. Keep the original sales receipt. Proof of purchase is required to obtain warranty performance. Coleman dealers, service centers, or retail stores selling Coleman products do not have the right to alter, modify or in any way change the terms and conditions of this warranty.

This warranty does not cover normal wear of parts or damage resulting from any of the following: negligent use or misuse of the product, use on improper voltage or current, use contrary to the operating instructions, disassembly, repair or alteration by anyone other than Coleman or an authorized service center. Further, the warranty does not cover Acts of God, such as fire, flood, hurricanes and tornadoes.

Coleman shall not be liable for any incidental or consequential damages caused by the breach of any express or implied warranty or conditions. Except to the extent prohibited by applicable law, any implied warranty of merchantability or fitness for a particular purpose is limited in duration to the duration of the above warranty or conditions. Some states, provinces or jurisdictions do not allow the exclusion or limitation of incidental or consequential damages or limitations on how long an implied warranty lasts, so the above limitations or exclusion may not apply to you. This warranty gives you specific legal rights, and you may also have other rights that vary from state to state or province to province.

HOW TO OBTAIN WARRANTY SERVICE

Take the product to an authorized Coleman service center. You can find the nearest authorized Coleman service center by calling 1-800-835-3278 or TDD 316-832-8707 in the United States or 1 800 387-6161 in Canada. If a service center is not conveniently located, attach to the product a tag that includes your name, address, daytime telephone number and description of the problem. Include a copy of the original sales receipt. Carefully package the product and send either by UPS or Parcel Post **insured** with shipping and **insurance** prepaid to:

For products purchased in the United States:
The Coleman Company, Inc.
3600 North Hydraulic
Wichita, KS 67219

For products purchased in Canada:
Sunbeam Corporation (Canada) Limited
5975 Falbourne Street
Mississauga, Ontario
Canada L5R 3V8

Do not mail products with fuel in tanks, or with disposable propane cylinders.

DO NOT RETURN THIS PRODUCT TO THE PLACE OF PURCHASE.

If you have any questions regarding this warranty please call 1-800-835-3278 or TDD 316-832-8707 in the United States or 1 800 387-6161 in Canada.

The Coleman Co., Inc. • 3600 N. Hydraulic • Wichita, KS 67219 U.S.A.
1-800-835-3278 • TDD: 316-832-8707

Sunbeam Corporation (Canada) Limited • 5975 Falbourne Street
Mississauga, Ontario Canada L5R 3V8 • 1 800 387-6161

©2004 The Coleman Company, Inc. All rights reserved.
Coleman® is a registered trademark of The Coleman Company, Inc.

©2004 The Coleman Company, Inc. Tous droits réservés.
Coleman® est une marque déposée de The Coleman Company, Inc.

©2004 The Coleman Company, Inc. Derechos Reservados.
Coleman® es una marca registrada de la Compañía Coleman, Inc.

5453-035T (2/4/2004