This Owner's Manual is provided and hosted by Appliance Factory Parts.

Appliance Factory Parts
Experts in BBQ, Humidifier, & Appliance Parts
1-800-955-7075

Royal 671
Owner's Manual

Shop genuine replacement parts for Royal 671

Models: 671, 7710

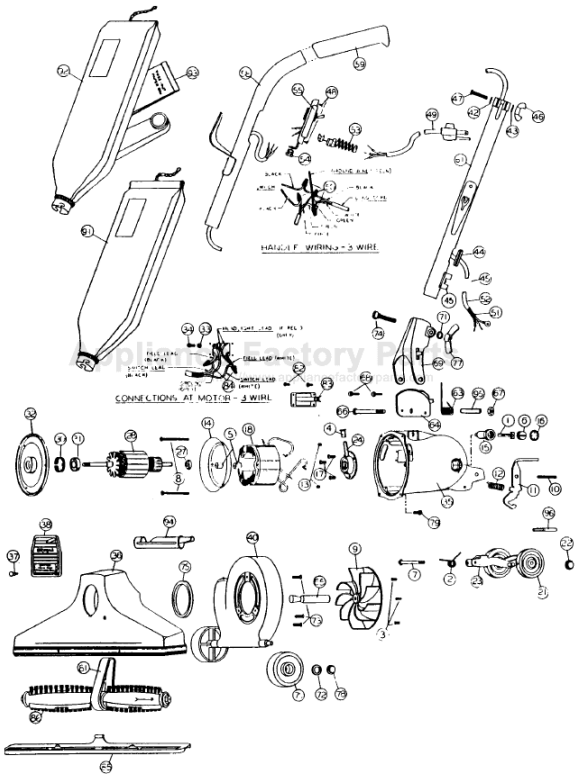

Find Your Royal Vacuum Cleaner Parts - Select From 772 Models

-------- Manual continues below --------

ROYAL

Models: 671, 7710

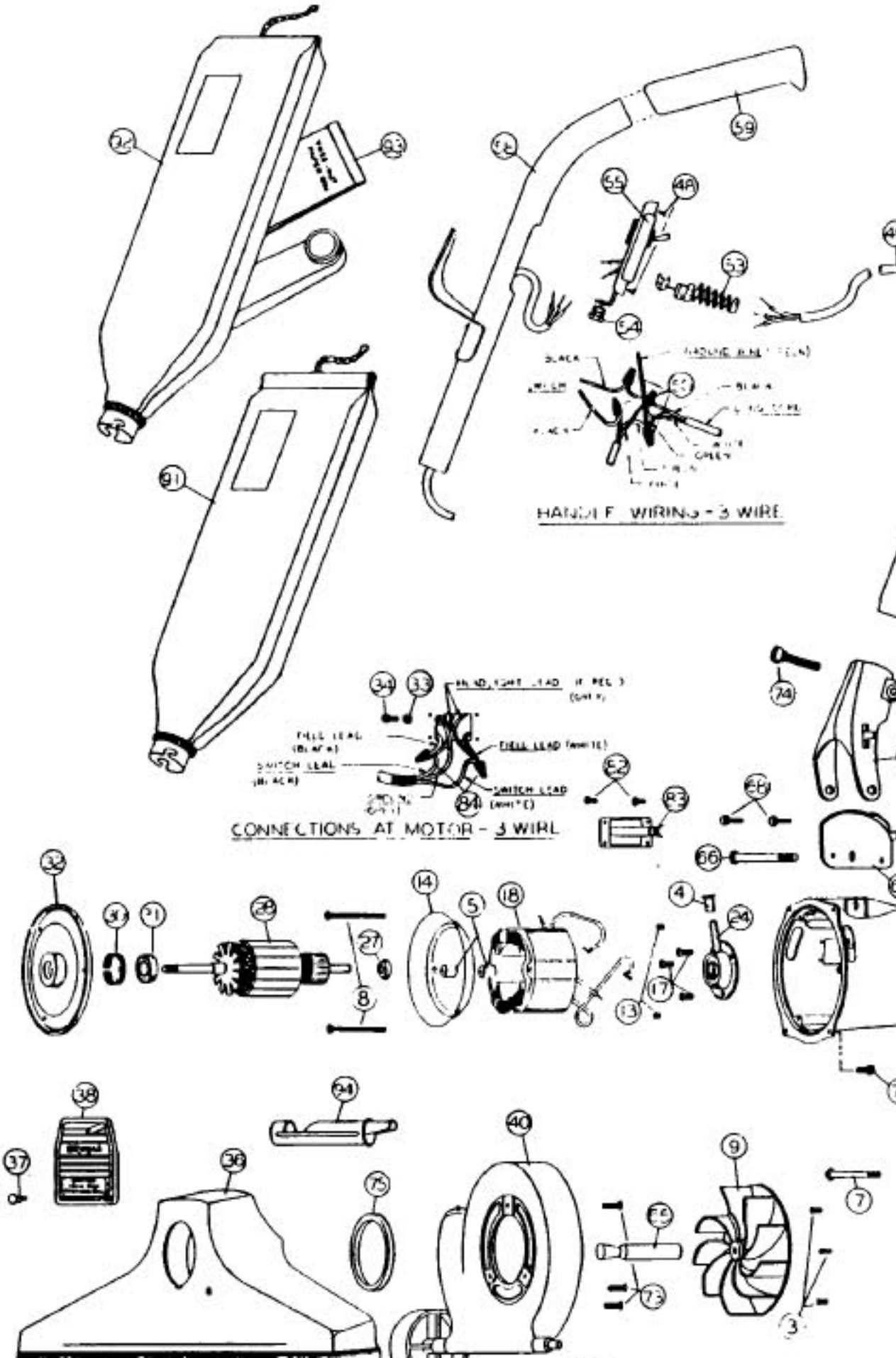

ROYAL ME

Models: 671, 7710

	NLA	Motor Unit Assy
1	NLA	Carbon Brush Assy
2	R-003008	Spring, rear fork
3	R-670013	Screw, motor plate ret.
4	NLA	Oiler Cap
5	R-618772	Spacer, baffle
6	R-672103	Screw, brush holder
7	R-311031	Screw & Washer Assy
7A	NLA	Drive Shaft
8	R-618016	Screw, field retainer
9	R-608005	Fan, heavy duty
10	R-670705	Spring Pin
11	R-690715	Release Pedal
12	R-672009	Release Pedal Spring
13	NLA	Set Screw, brush holder
14	NLA	Baffle Plate
15	NLA	Brush Holder
16	R-801034	Brush Holder Protector Cap
17	R-801701	Screw, rear bearing retainer
18	R-780002	Field, 120V
	NLA	Rear Wheel, Fork & Shaft Assy
21	R-671705	Wheel, wide
22	R-801711A	Wheel Retainer
23	R-067105	Rear Wheel Fork & Shaft Assembly
24	R-080126	Rear Bearing Assembly
	R-078007	Motor Plate & Armature Assy
27	R-175053	Washer, oil slinger
28	R-780001	Armature, 120V
	NLA	Motor Plate & Bearing Assy
30	R-880046	Tolerance Ring
31	R-880026	Ball Bearing
32	NLA	Motor Plate
33	R-006318	Lockwasher, ground lead
34	R-880707	Screw, ground lead
35	NLA	Motor Housing
36	NLA	Nozzle Assembly
37	NLA	Rivet, nozzle plug
38	R-6707446	Nozzle Plug
40	NLA	Fancase Assembly
	R-891052	Handle & Cord Assembly, 50 ft
42	R-003311	Washer, adaptor clamp screw
43	R-023311	Lockwasher
44	R-230324	Grommet
45	R-670844	Cord, clip
46	R-801710	Wingnut, small
47	R-801712	Screw, motor plate

51	NLA	Cord
52	NLA	Shor
53	R-611305	Strai
54	R-880304	Strai
55	R-060837	Switc
58	NLA	Uppe
59	R-880314	Hand
61	R-065534	Hand
63	R-004723	Sprin
64	R-133714	Hand
66	R-801708	Bolt,
67	R-801714	Nut,
68	R-990104	Scre
69	R-028590	Hand
71	R-003311	Wash
72	R-005138	Wash
73	R-023309	Scre
74	R-230713	Carri
75	R-2854270	Gask
76	R-671705	Wide
77	R-285720	Wing
78	R-801711A	Whe
79	R-980743	Scre
81	R-672260	Belt
83	R-183749	Side
82	R-360753	Scre
84	R-259762	Conn
85	R-672270	Nozz
	R-673273	Brus
	R-180273	Brus
91	NLA	Bag
	R-066248	Bag
92	NLA	Bag
	R-0662421	Bag
93	R-66247	Pape
	R-088147	Pape
94	R-880262	Belt
95	R-110773	Inser
96	R-1300086	Cove