This Owner's Manual is provided and hosted by Appliance Factory Parts.

Appliance Factory Parts
Experts in BBQ, Humidifier, & Appliance Parts
1-800-955-7075

Royal 085525 Owner's Manual

Shop genuine replacement parts for Royal 085525

Find Your Royal Vacuum Cleaner Parts - Select From 772 Models

-------- Manual continues below --------

ROYAL

Model: 085525, 085530, 085540, 085545, 085560, 085570, 085575, 085580

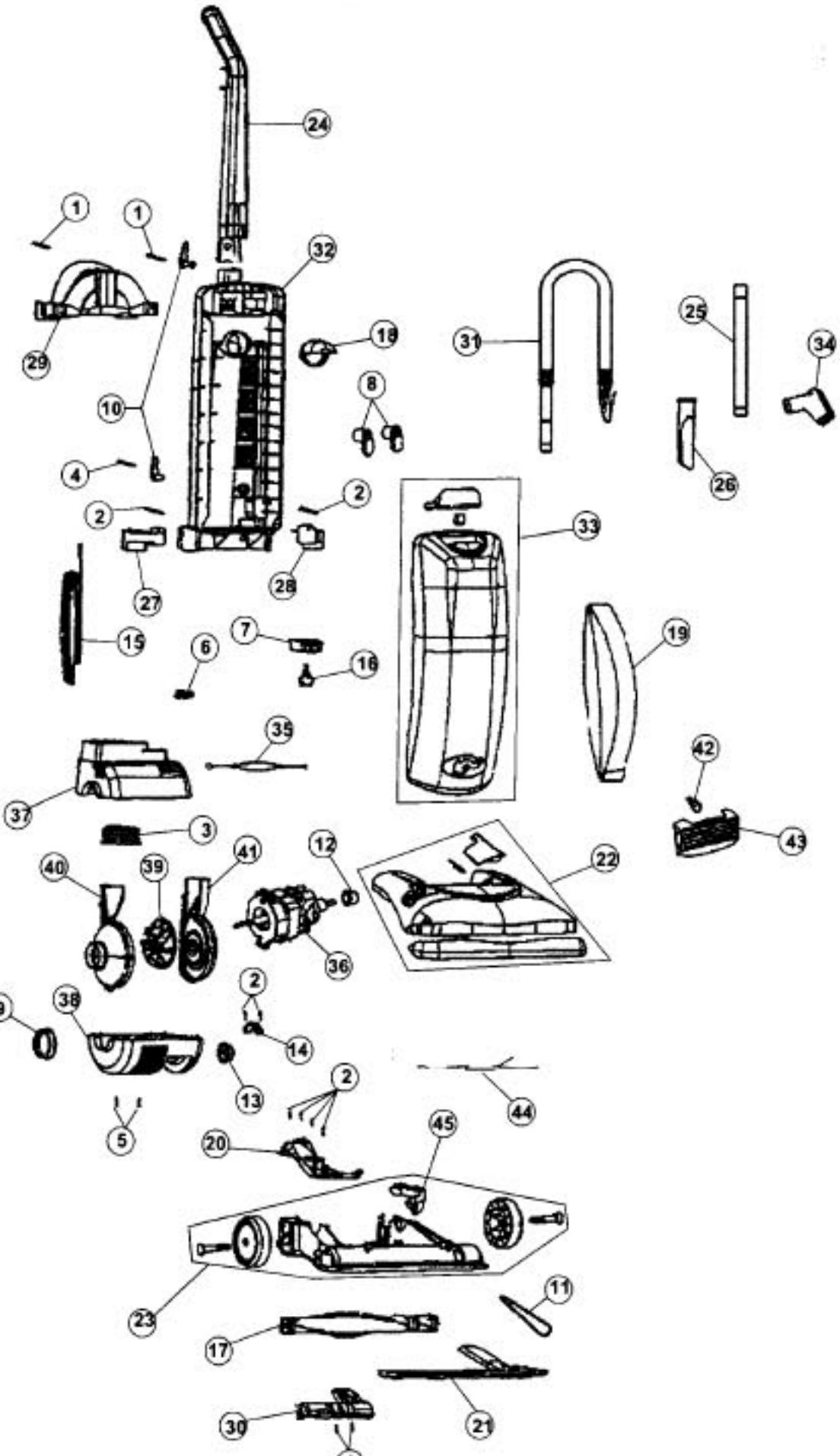

Index	Part No.	
1	R-250100	Screw
2	R-720430	Screw
3	R-855185	Handle
4	R-520415	Screw
5	R-520180	Screw
6		Pigtail s
7	R-855140	Pedal, s
8	R-855155	Tab latc
9	R-855105	Pivot se
10	R-920015	Cord ho
11	R-540310	Style 5
12	R-720325	Motor g
13	R-720355	Pivot bu
14	R-820351	Pivot cl
15	R-855240	Power c
16	R-860081	Switch
17	R-520125	Brush r
	R-2JNO300	Brushro
18	R-520011	Air defle
19	R-620147	Type D
20	R-855100	dirt pas
21	R-855135	Nozzle
22		Nozzle
	R-8553500	Nozzle
	R-855350	Nozzle
	R-8553503	Nozzle
		Nozzle
		Nozzle
		Nozzle
	R-855350	Nozzle
23	R-855110	Nozzle
24	R-855160	Handle
25	R-4028036	Extensi
26	R-920035	Crevice
27	R-855500	Hose cu
28	R-855205	Wand c
29	R-855290	Upper t
30	R-530200	Roller li
31	R-855750	Hose as
32	R-855145	Back pa
33	R-855150L	Front pa
33	R-855150F	Front pa 085580
	R-8551503	Front pa
	R-855150A	Front pa
		Front pa
		Front pa
34	R-920215	2-in-1 to
35	R-855127	Internal