This Owner's Manual is provided and hosted by Appliance Factory Parts.

Appliance Factory Parts
Experts in BBQ, Humidifier, & Appliance Parts
1-800-955-7075

Royal 10563CAB Owner's Manual

Shop genuine replacement parts for Royal 10563CAB

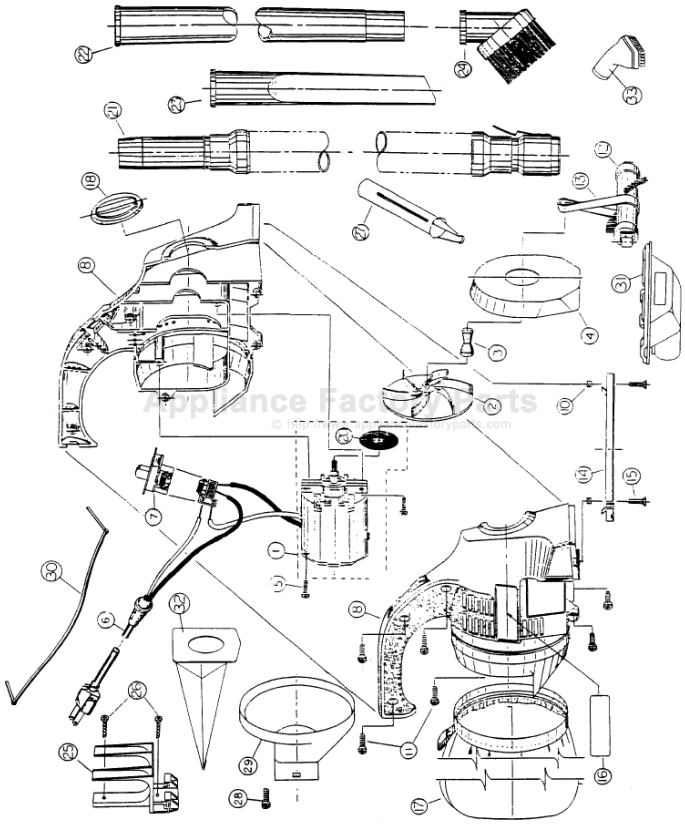

Find Your Royal Vacuum Cleaner Parts - Select From 772 Models

-------- Manual continues below --------

ROYAL

Models: 103, 103B, 10515, 10515B, 10563CA, 10563CAB, DD120, 150CA, 150B, 150ZU
500B, 503B, 510, 510A, 513B, 513PL, 515, DD520, DD520B, 523, 533, 537, 537B, 537CA
553ZUK, 560, 06500, 08130, 08130B, 08130CA, 08130CAB, 08500, 08500B, 08500CA, 0

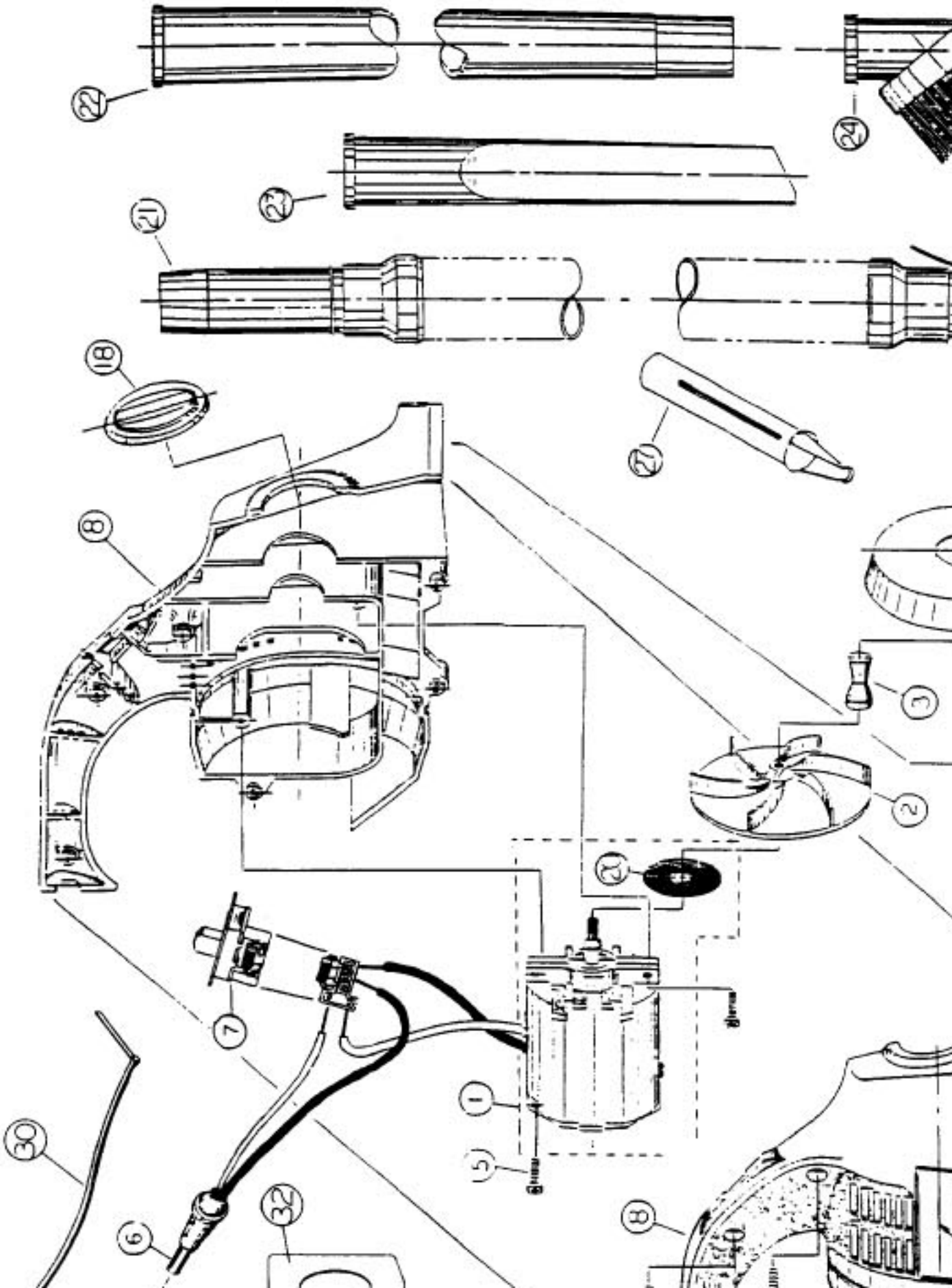

ROYAL

Models: 103, 103B, 10515, 10515B, 10563CA, 10563CAB, DD120, 150CA, 150B, 150Z
500B, 503B, 510, 510A, 513B, 513PL, 515, DD520, DD520B, 523, 533, 537, 537B, 537C
553ZUK, 560, 06500, 08130, 08130B, 08130CA, 08130CAB, 08500, 08500B, 08500CA,

1	R-857010	Motor & Seal Assy
1	R-857000	Motor & Seal Assy, 08510/B, 537/B, 10515/B, 537CA/B, 10563CA/B
1	NLA	Motor & Seal Assy, 150Z/ZUK, 550Z/ZUK, 553Z/ZUK
1	NLA	Motor & Seal Assy, 560
2	R-503004	Fan
3	R-503261	Shaft
3	NLA	Shaft, 150Z/ZUK, 550Z/ZUK, 553Z/ZUK
4	R-503791	Stone Shield
5	R-503618	Screw, motor
6	NLA	Cord & Euro Plug Assy, 20 FT, 150Z, 550Z, 553Z
6	NLA	Cord & UK Plug Assy, 20ft, 150ZUK, 550ZUK, 553ZUK
6	R-010336	Cord Assy, 20 ft, 172, 08130, 18130CA, 103, DD120, 150CA, 150CAWC, 103
6	R-010336	Cord Assy, 25 ft, 08500, 10515, 537, 08130, DD520, 537CA, 08500CA, 10563CA, 510, 06500, 513PL, 550CA, 500, 503, 510, 513, 515, 523, 533
6	R-999020	Cord Assy, 20 ft, 172B, 08130B, 08130CAB
6	R-999025	Cord Assy, 25 ft, 08500B, 08510B, 10515B, 537B, 08130B, DD520B, 537CAB
6	NLA	Cord, 25 ft, 560
	R-820020	Cord Clip, 150Z/ZUK, 550Z/ZUK, 553Z/ZUK
7	NLA	Switch, 150Z/ZUK, 550Z/ZUK, 553Z/ZUK
7	NLA	Switch, 2 speed, 172/B, 08130/B, 08500/B, 08510/B, 10515/B, 537/B, DD520/B, 0813CA, 08500CA, 10563CA, 537CA
7	R-503303	Switch, 1 speed, 08131/B, 103, 510, DD120, 150CA, 150CAWC, 550CA, 103, 500, 503, 510, 515, 523, 533
7	NLA	Switch, 2 speed, 513PL
7	R-523303	Switch, 513
7	NLA	Switch, rocker, 560
8	NLA	Housing Assy, red, 150Z/ZUK, 550Z/ZUK
8	NLA	Housing Assy, black, 553Z/ZUK
8	NLA	Housing Assy, red, 172, 08130, 10515, 08131, 08130CA, 103, DD120, 150CA, 150CAWC, 550CA, 103, 503, 523
8	NLA	Housing Assy, black, 08500/CA, 10563CA, 513PL, 06500, 500, 513, 515
8	NLA	Housing Assy, teal, 08510
8	NLA	Housing Assy, grey, 510
8	NLA	Housing Assy, blue, 537, 537CA, 533
8	NLA	Housing Assy, red, 172B, 08130B, 10515B, 08131B, 08130CAB
8	NLA	Housing Assy, black, 08500B, DD250B,
16	NLA	Label, 103
16	R-503707	Label, 085 105 537
16	NLA	Label,
16	NLA	Label,
16	NLA	Label,
16	NLA	Label,
16	NLA	Label,
16	NLA	Label,
16	NLA	Label,
16	NLA	Label,
17	NLA	Bag As
17	NLA	Bag As
17	NLA	Bag As
17	NLA	Bag As
17	NLA	Bag As
17	NLA	Bag As
17	NLA	Bag As
17	NLA	Bag As
17	NLA	Bag As
17	NLA	Bag As
17	NLA	Bag As
17	NLA	Bag As
17	NLA	Bag As
17	NLA	Bag As
17	NLA	Bag As
17	NLA	Bag As
17	NLA	Bag As
17	NLA	Bag As
17	NLA	Bag As
17	NLA	Bag As
18	R-501744	Name
18	R-502744	Name
20	R-503266	Felt Se
21	R-0502846	Hose A
21	NLA	Hose A 550
22	R-502776	Wand, 513
23	R-502801	Crevic
23	NLA	Crevic
24	R-050282	Brush A 523
25	NLA	Wall M 510
26	R-503010	Screw
27	R-880262	Belt Lif
28	R-250100	Screw,