This Owner's Manual is provided and hosted by Appliance Factory Parts.

Appliance Factory Parts
Experts in BBQ, Humidifier, & Appliance Parts
1-800-955-7075

Royal 08230 ULTRA Owner's Manual

Shop genuine replacement parts for Royal 08230 ULTRA

Find Your Royal Vacuum Cleaner Parts - Select From 772 Models

-------- Manual continues below --------

ROYAL

Dirt Devil U

Models: 08230 'Ultra'

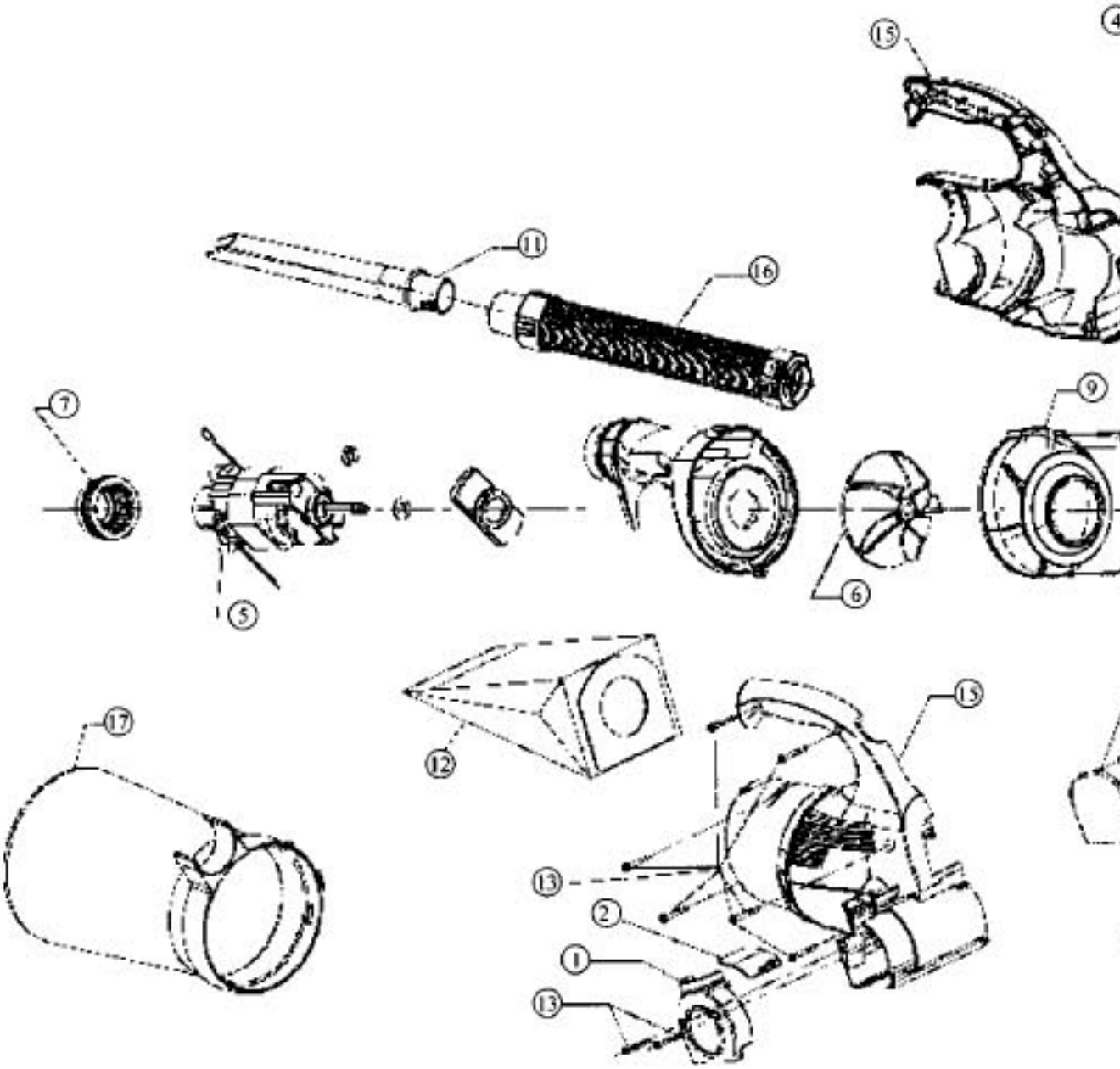

Index	Part No.	Description
1	R-232121	Right end cap body
2	R-232140	Swing door hose
3	R-232170	Switch cover
4	R-232187	Switch with leads - double tab
4	NLA	Switch with leads - single tab
5	NLA	Motor
6	R-232213	Fan
7	NLA	Rear motor grommet