This Owner's Manual is provided and hosted by Appliance Factory Parts.

Appliance Factory Parts
Experts in BBQ, Humidifier, & Appliance Parts
1-800-955-7075

PANASONIC MC-V7515 Owner's Manual

Shop genuine replacement parts for PANASONIC MC-V7515

Find Your PANASONIC Vacuum Cleaner Parts - Select From 605 Models

-------- Manual continues below --------

Panasonic®

VACUUM CLEANER
Aspiradora

MC-V7515

Operating Instructions
Instrucciones de operación

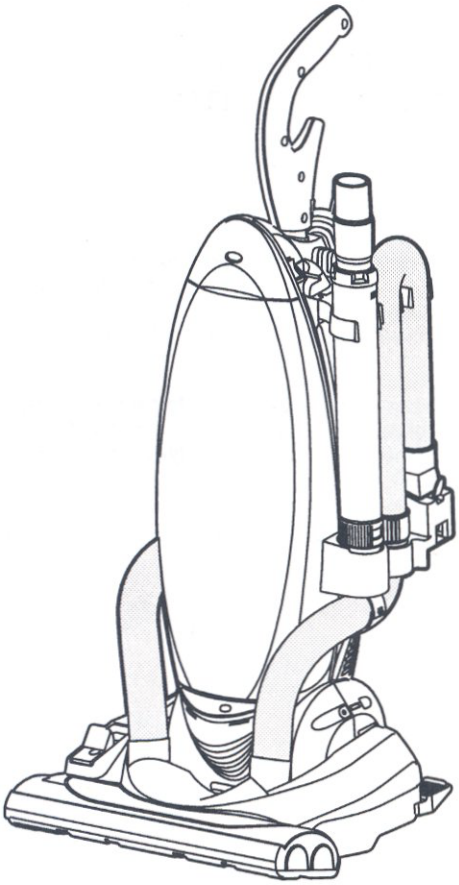

Before operating your vacuum cleaner, please read these instructions completely.

Antes de usar su aspiradora, lea completamente estas instrucciones por favor.

CØ1ZBDNØØUØØ

CONSUMER INFORMATION

Please read IMPORTANT SAFETY INSTRUCTIONS on page 5 before use. Read and understand all instructions.

TO OUR VALUED CUSTOMER

We are very pleased to welcome you to the Panasonic family of products. Thank you for purchasing this product. Our intent is that you become one of our many satisfied customers.

Proper assembly and safe use of your vacuum cleaner are your responsibilities. Your vacuum cleaner is intended only for household use. The cleaner should be stored in a dry, indoor area. Read the Operating Instructions carefully for important use and safety information.

Special care is required when vacuuming certain types of carpet or floor covering. Always check the carpet or floor covering manufacturer's recommended cleaning instructions before vacuuming.

PLEASE PAY CLOSE ATTENTION TO ALL WARNING AND CAUTION STATEMENTS.

WARNING

WARNING statements are designed to alert you to the possibility of personal injury, loss of human life, and/or damage to the vacuum cleaner and/or personal property if the instructions given are not followed.

CAUTION

CAUTION statements are designed to alert you to the possibility of damage to the vacuum cleaner and/or personal property if the instructions given are not followed.

WARNING

TO AVOID ELECTRICAL SHOCK

Never vacuum damp or wet surfaces or liquids.
DO NOT store machine outdoors.
Replace worn or frayed power cord immediately.
Unplug from outlet when not in use and before servicing.

TO AVOID ACCIDENTS

Except for hand-held cleaners, keep machine on floor - not chairs, tables, steps, stairs, etc.
Store machine promptly after each use to prevent accidents such as tripping over power cord or machine.
Use machine and accessories only in a manner intended by the manufacturer.
The use of an extension cord is not recommended.

©2001 Matsushita Electric Corporation of America. All rights reserved.

TABLE OF CONTENTS / *Tabla de contenido*

CONSUMER INFORMATION / *Información para consumidor* 2-3
IMPORTANT SAFETY INSTRUCTIONS
Instrucciones importantes de seguridad 5-6
PARTS IDENTIFICATION / *Identificación de piezas* 7

ASSEMBLY / *Montaje* 8
- **Attaching Handle** / *Colocación del mango* 8
- **Power Cord** / *Cordón eléctrico* 8

FEATURES / *Características* 9
- **Automatic Self Adjusting Nozzle** / *Boquilla de ajuste automático* 9
- **Edge Cleaning** / *Limpieza para orillas* 9
- **Thermal Protector** / *Protector termal* 9
- **Motor Protector** / *Protector del motor* 10
- **Carpet-Bare Floor Selector** / *Selector carpet-bare floor* 10
- **Dirt Sensor** / *Sensor de polvo* 11
- **Tool Caddy** / *Caja de Herramientas* 11

TO OPERATE CLEANER / *Para operar la aspiradora* 12
- **Power Cord** / *Cordón eléctrico* 12
- **Cord Hook** / *Sujetador del cordón* 12
- **ON-OFF Switch** / *Control ON-OFF* 13
- **Handle Release Pedal** / *Pedal de liberación del mango* 13
- **Using Tools** / *Uso de herramientas* 13-14

ROUTINE CARE OF CLEANER / *Cuidado de rutina de la aspiradora* 15
- **Cleaning Secondary Foam Filter**
  Limpieza del segundo filtro de goma espuma 15
- **Replacing HEPA Exhaust Filter** / *Cambiar del filtro de escape HEPA* 16
- **Changing Dust Bag** / *Cambio de la bolsa de polvo* 17
- **Replacing Belt** / *Cambio de la correa* 18
- **Replacing Headlight Bulb** / *Cambio de la bombilla* 18
- **Cleaning Agitators** / *Limpieza des agitadors* 19
- **Cleaning Exterior and Tools** / *Limpieza del exterior y de los herramientas* 19
- **Cleaning Dirt Sensor Optics**
  Limpieza de los ópticos del sensor de polvo 19
- **Removing Clogs** / *Quitar de los residuos de basura en los conductos* 20

BEFORE REQUESTING SERVICE / *Antes de pedir servicio* 21-22
NOTES / *Notas* 23-25
WARRANTY / *Garantía* 26-27
WHAT TO DO WHEN SERVICE IS NEEDED / *Cuando necesita servicio* 28

IMPORTANT SAFETY INSTRUCTIONS

When using vacuum cleaner, basic precautions should always be followed, including the following:

READ ALL INSTRUCTIONS BEFORE USING THIS VACUUM CLEANER

⚠ WARNING

To reduce the risk of fire, electrical shock, injury:

1. **DO NOT** leave vacuum cleaner when plugged in. Unplug from outlet when not in use and before servicing.
2. To reduce the risk of fire, electric shock - **DO NOT** use outdoors or on wet surfaces.
3. **DO NOT** allow to be used as a toy. Close attention is necessary when used by or near children.
4. Use only as described in this manual. Use only manufacturer's recommended tools.
5. **DO NOT** use with damaged cord or plug. If vacuum cleaner is not working as it should, has been dropped, damaged, left outdoors, or dropped into water, return it to an authorized Panasonic Servicenter.
6. **DO NOT** pull or carry by cord, use cord as a handle, close door on cord, or pull cord around sharp edges or corners. **DO NOT** run vacuum cleaner over cord. Keep cord away from heated surfaces.
7. **DO NOT** unplug by pulling on cord. To unplug, grasp the plug, not the cord.
8. **DO NOT** handle plug or vacuum cleaner with wet hands.
9. **DO NOT** put any objects into openings. **DO NOT** use with any opening blocked; keep free of dust, lint, hair, and anything that may reduce air flow.
10. Keep hair, loose clothing, fingers, and all parts of body away from openings and moving parts.
11. **DO NOT** pick up anything that is burning or smoking, such as cigarettes, matches, or hot ashes.
12. **DO NOT** use without dust bag and/or filters in place.
13. Turn off all controls before unplugging.
14. Use extra care when cleaning on stairs.
15. **DO NOT** use cleaner to pick up flammable or combustible liquids such as gasoline or use in areas where they may be present.
16. **DO NOT** use operate cleaner without belt cover properly installed.

SAVE THESE INSTRUCTIONS

THIS VACUUM CLEANER IS INTENDED FOR HOUSEHOLD USE ONLY

Note: Before you plug in your Panasonic vacuum cleaner, make sure that the voltage indicated on the rating plate located at the back of the vacuum cleaner is the same as your local supply.

PARTS IDENTIFICATION
Identificación de piezas

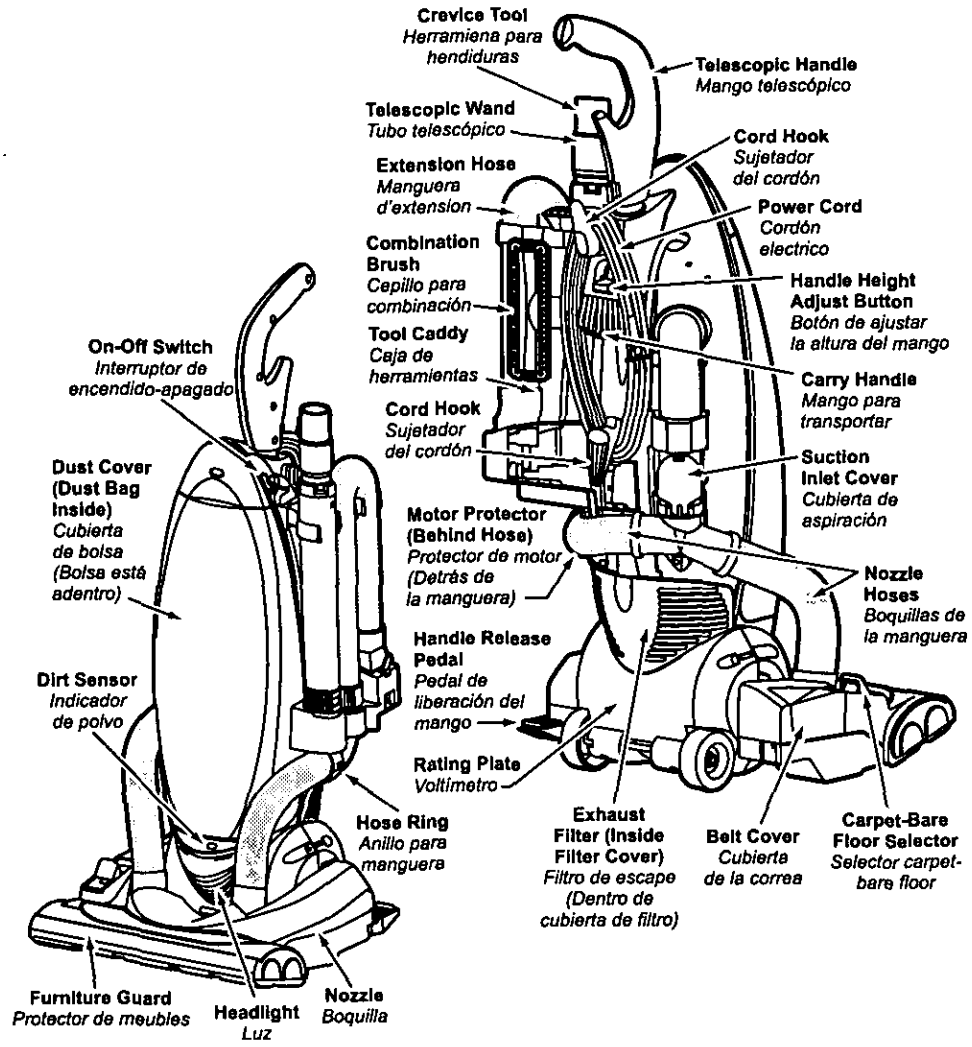

FEATURE CHART / *Diagrama de características*
(PANASONIC UPRIGHT VACUUM)
(Aspiradora vertical Panasonic)

FEATURES *Características*	Power *Voltaje*	Dirt Sensor *Indicador de polvo*	Headlight *Luz*	Cord Length *Extensión de cordón*	Bare Floor *Uso sin alfombra*
Model / *Modelo* MC-V7515	120V AC (60Hz) 12.0 A / 12,0 A	Yes *Si*	Yes *Si*	30 Ft. (9.1 m) *9,1 m (30 pi)*	Yes *Si*

Attaching Handle / *Colocación del mango*

- **Line up holes in telescopic handle with back of vacuum cleaner, and insert handle into handle opening**
  Alinee los agujeros en el mango telescópico con la parte de atrás de la aspiradora, é inserte el mango en la abertura del mango
- **Ensure handle alignment button is in alignment slot in front of handle opening and slide down until engaged**
  Asegure que el botón de alineación está en la hendija de alineación en frente de la abertura del mango y deslice hacia abajo hasta que enganche
- **Depress handle height adjust button to allow handle to be lowered into vacuum**
  Apriete el botón de ajustar la altura del mango para permitir que el mango pueda bajarse en la aspiradora
- **Push down on handle until it locks into place at desired height**
  Apriete hacia abajo el mango hasta que entre en posición a la altura deseada
- **To adjust handle height, see "Telescopic Handle" section**
  Para ajustar la altura del mango, ver sección "Mango Telescópico"

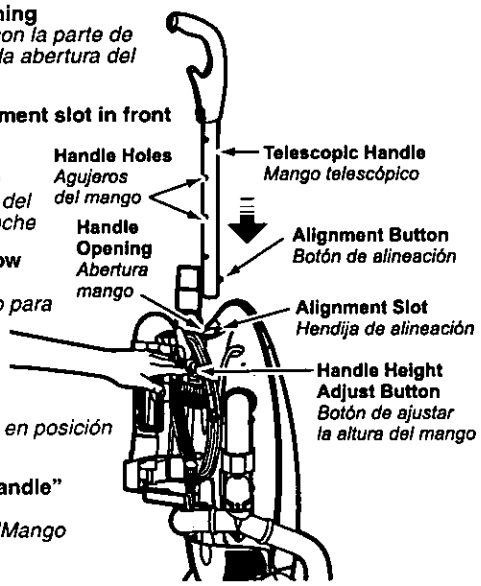

Power Cord / *Cordón eléctrico*

- **Wrap power cord around cord hooks**
  Envuelva el cordón eléctrico alrededor de los ganchos de cordón
- **Secure retainer (plug head) to power cord**
  Asegure la clavija en el cordón eléctrico

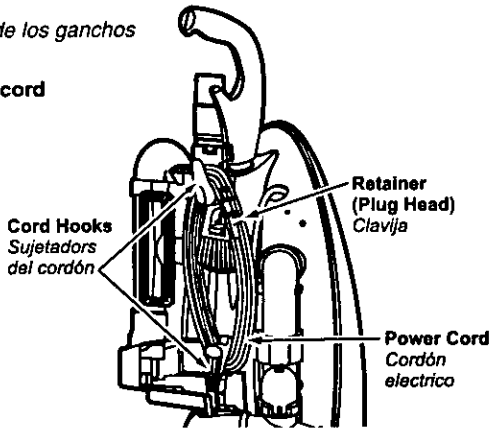

FEATURES / *Características*

Automatic Self Adjusting Nozzle
Boquilla de ajuste automático

- **The nozzle of your Panasonic upright vacuum cleaner automatically adjusts to any carpet pile height**
  La boquilla de su aspiradora vertical Panasonic se ajusta automáticamente a la altura de cualquier pelo de alfombra
- **Feature allows nozzle to float evenly over carpet pile surfaces**
  La característica permite que la boquilla flote fácilmente en las superficies del pelo de alfombra
- **No manual adjustments required**
  No se requieren los ajustes manuales

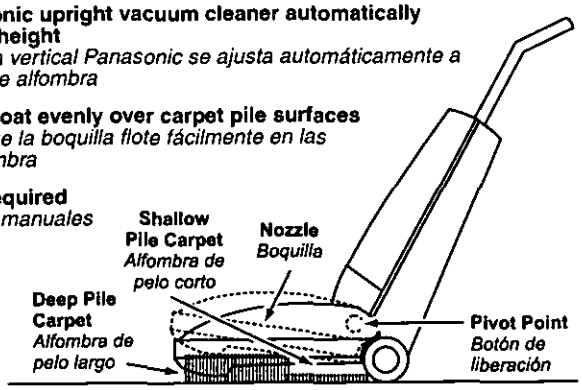

Edge Cleaning / *Limpieza para orillas*

- **Edge cleaning feature provides for improved cleaning of carpets near walls and furniture**
  Use la característica de limpieza para orillas para aspirar con facilidad cerca de las paredes y los muebles

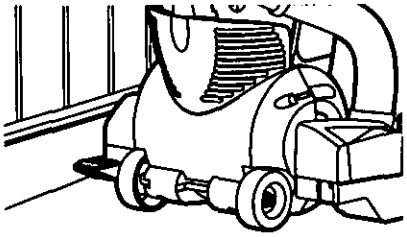

Thermal Protector / *Protector termal*

- **If a clog occurs, the thermal protector turns off the suction motor automatically**
  Si ocurre una atascadura, el protector térmico apaga el motor de succión automáticamente.
- **Headlight will remain on**
  La luz delantera se mantiene prendida
- **To correct problem, turn off and unplug vacuum, remove clogs, and/or clean/replace filters**
  Para corregir, apague y desenchufe la aspiradora, saque las obstrucciones, y/o limpie/cambiar los filtros
- **Replace full bag if necessary**
  Reemplace toda la bolsa si es necesario
- **Wait approximately thirty (30) minutes and plug vacuum in and turn back on**
  Espere aproximadamente treinta (30) minutos y enchufe la aspiradora y voltéela

Motor Protector / *Protector del motor*

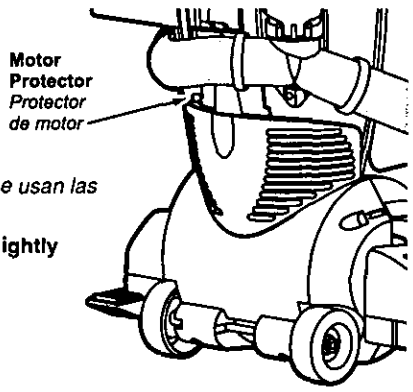

- **Motor protector automatically opens to provide cooling air when a clog occurs or when bag needs changing**
  Se abre automáticamente el protector del motor para proveer el aire fresco cuando hay unos residuos o cuando se necesita cambiar la bolsa
- **Motor protector may open when using tools**
  Es posible que el protector del motor se abra cuando se usan las herramientas
- **If motor protector opens, the vacuum will make a slightly different sound**
  Si se abre el protector del motor, la aspiradora hará un sonido poquito diferente

Carpet-Bare Floor Selector / *Selector carpet-bare floor*

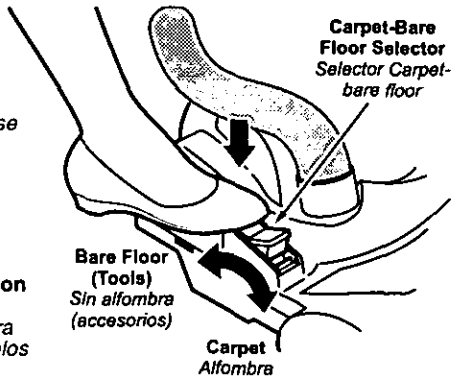

- **Selector should be placed in BARE FLOOR (TOOLS) position when using cleaner on bare floors and when using tools**
  Se debe colocado el selector en la posición para BARE FLOOR (TOOLS) cuando pasa la aspirador en los suelos sin alfombra y cuando se usan las herramientas
- **The agitators do not rotate in the BARE FLOOR (TOOLS) position**
  Los agitadores no rotan en la posición BARE FLOOR (TOOLS)
- **Selector should be placed in CARPET position when using cleaner on carpeted floors**
  Se debe colocado el selector en la posición para CARPET cuando pasa la aspiradora en los suelos con alfombra
- **To operate, place handle in upright position. Step on Carpet-Bare Floor selector**
  Para operar, ponga el mango en la posición vertical. Pise el selector Piso Sin Alfombra
- **Rotate selector to the rear position BARE FLOOR (TOOLS)**
  Rote el selector a la posición de atrás BARE FLOOR (TOOLS)
- **To resume carpet cleaning rotate selector forward to CARPET position**
  Para seguir limpiando la alfombra rote el selector hacia adelante a la posición CARPET
- **Take care when selecting either position to ensure selector is pushed fully and quickly as possible to desired position**
  Siempre tenga cuidado al seleccionar cualquier posición para asegurar que el selector esté movido rápido y por completo a la posición deseado

Dirt Sensor / *Sensor de polvo*

- **The DIRT SENSOR detects dirt passing through the vacuum**
  El sensor de polvo detecta el polvo pasando por la aspiradora
- **Red light indicates that dirt is being picked up by the vacuum**
  La luz roja indica que el polvo está siendo levantado por la aspiradora
- **No light indicates cleaning is complete**
  No light indicates cleaning is complete
- **Fuzz from new carpets may cause the red light to remain on longer than expected**
  Pelusa de alfombras nuevas puede causar que la luz roja permanezca encendida más tiempo que el esperado

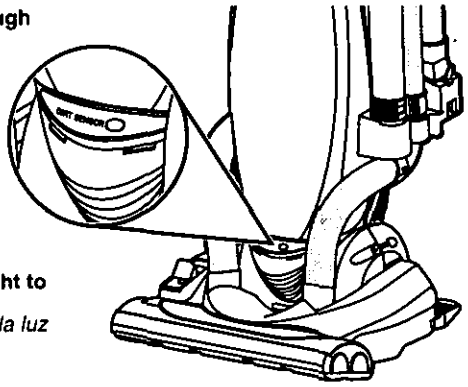

Tool Caddy / *Caja de herramientas*

- **Tool caddy provides convenient, removable storage for tools**
  La caja de herramientas provee un depósito conveniente, removible para las herramientas
- **To remove tool caddy from vacuum, lift up at tool caddy handle**
  Para remover la caja de herramientas de la aspiradora, levante de la manija de la caja de herramientas
- **To attach tool caddy to vacuum, insert upper tab into slot next to the On-Off switch, and the lower tab into the slot between dust compartment and long hose**
  Para ajustar la caja de herramientas a la aspiradora, inserte la lengüeta superior en la ranura de al lado de la llave On-Off, y la lengüeta inferior adentro de la ranura entre el compartimiento del polvo y la manguera larga

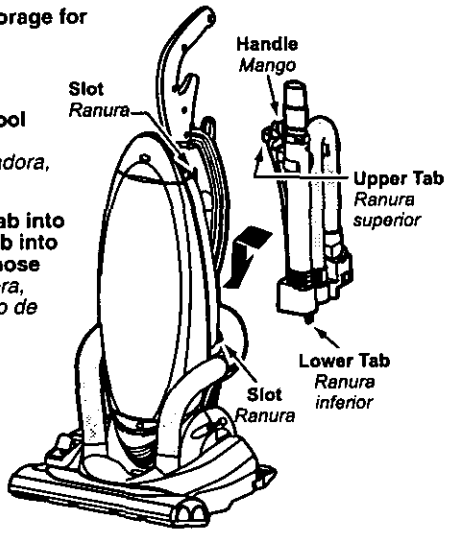

TO OPERATE CLEANER
Para operar la aspiradora

Telescopic Handle / *Mango telescópico*

➤ **Telescopic handle may be raised or lowered as desired for vacuuming or storage**
El mango telescópico puede ser levantado o bajado para aspirar o para almacenar

➤ **To raise or lower the telescopic handle to one of four (4) positions, depress handle height adjust button**
Para levantar o bajar el mango telescópico a una de cuatro (4) posiciones, apriete el botón de ajustar la altura del mango

➤ **When vacuuming, place the power cord in the cord clip on the back of the handle**
Cuando esté aspirando, coloque el cable de poder en el clip del cordón en la parte de atrás del mango

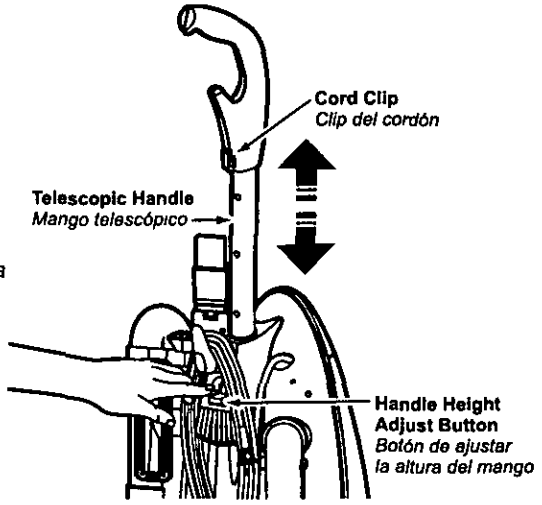

Power Cord / *Cordón eléctrico*

NOTE To reduce the risk of electrical shock, this vacuum has a polarized plug, one blade is wider than the other This plug will fit in a polarized outlet only one way If the plug does not fit fully in the outlet, reverse the plug If it still does not fit, contact a qualified electrician to install the proper outlet DO NOT CHANGE THE PLUG IN ANY WAY Only use outlets near the floor

Nota *Para reducir el riesgo de choque eléctrico, esta aspiradora cuenta con una clavija polarizada, uno de los contactos es más ancho que el otro La clavija sólo puede insertarse de una manera en el enchufe Si la clavija no cabe bien en el enchufe, inviertala Si aun no cabe, llame a un electrista para que instale un enchufe correcto No altere la clavija de ninguna manera No altere la clavija de ninguna manera Use solamente las tomas de pared cercas del suelo*

Cord Hook / *Sujetador del cordón*

1)

➤ **Detach plug head from power cord**
Desconecte el enchufe del cordón eléctrico

➤ **Rotate cord hook down to release cord**
Ruede hacia abajo el sujetador del cordón para librerarlo

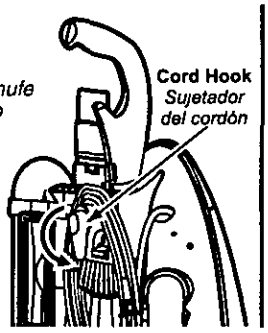

2)

➤ **Return the cord hook to the upright position before attempting to rewind the cord**
Devuelva el gancho del cordón a la posición vertical antes de tratar de rebobinar el cordón

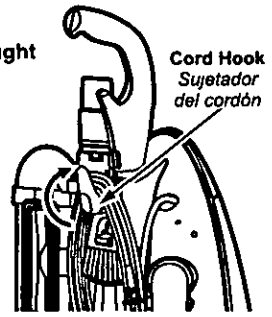

ON-OFF Switch / *Control ON-OFF*

- **Ensure ON-OFF switch is OFF**
  Asegúrese de que el control ON-OFF esté en la posición OFF
- **Plug the power cord into 120V outlet**
  Enchufe el cordón eléctrico en una toma de pared de 120 V
- **ON position turns vacuum on**
  La posición ON enciende la aspiradora
- **OFF position turns off vacuum**
  La posición OFF apaga la aspiradora

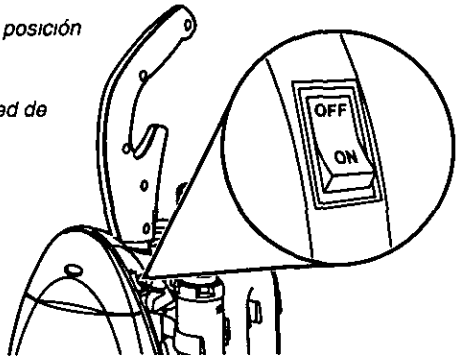

Handle Release Pedal / *Pedal de liberación del mango*

- **Step on handle release pedal to change handle position**
  Pise en el pedal de liberación del mango para cambiar la posición del mango
- **Move vacuum to upright position for storage and tool use**
  Mueva la aspiradora a la posición vertical para el amenace y el uso de las herramientas
- **Move vacuum to middle position for normal use**
  Mueva la aspiradora a la posición mediana para el uso normal
- **Use low position for cleaning under furniture**
  La posición baja para limpiar debajo de los muebles

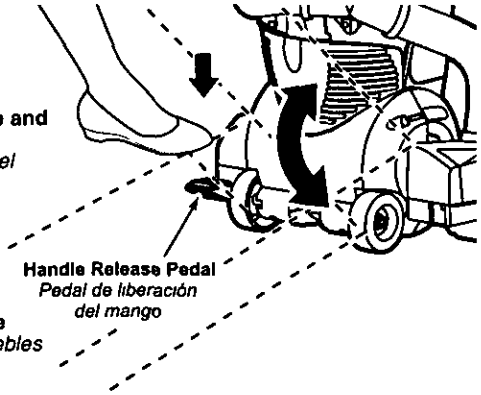

Using Tools / *Uso de herramientas*

- **ALWAYS place carpet-bare floor selector in BARE FLOOR (TOOLS) positon when using tools**
  Al usar las herramientas siempre coloque el selector carpet/bare floor en la posición BARE FLOOR (TOOLS)
- **Remove hose from tool caddy by depressing tab that holds hose end in place**
  Saque la manguera de la caja de herramientas apretando la lengueta que sostiene el extremo de la manguera en su lugar

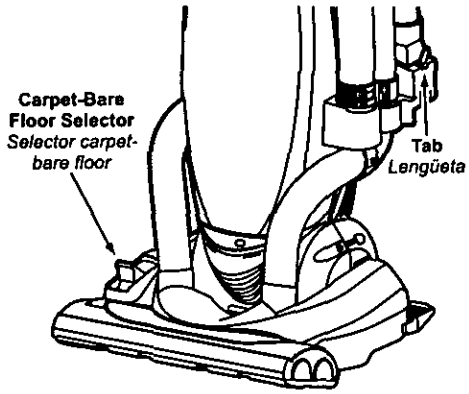

Using Tools (Cont.) / *Uso de herramientas (Cont.)*

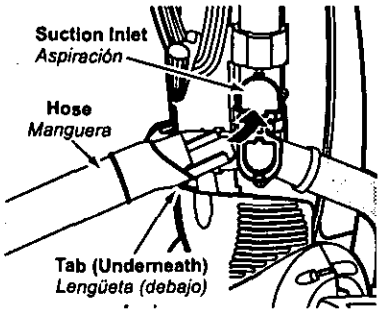

- **Open suction inlet cover, and insert hose end (with tab on bottom) as shown into suction inlet**
  Abra la cubierta de aspiración, e inserte el extremo de la manguera (con lengüeta al fondo) como se muestra en la entrada de aspiración
- **The tools can be attached to hose, wand or crevice tool**
  Se puede conectar las herramientas con la manguera, el tubo o la herramienta de hendiduras
- **To use the telescopic wand, remove the crevice tool from the end of the wand**
  Para usar la vara telescópica, saque la herramienta de la ranura del extremo del frente de la vara

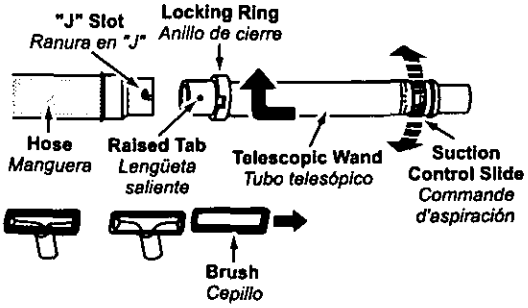

- **Attach wand to hose by aligning the two (2) raised tabs on wand with "J" slots in hose, guide tabs along grooves, twist to lock in place**
  Para conectar el tubo a la manguera, alinee las dos (2) lengüetas levantadas en el tubo con las ranuras "J" en la manguera. Mueva las lengüetas hacia las ranuras, ruédelas para asegurar
- **To extend the telescopic wand, twist the locking ring to UNLOCK**
  Para extender la vara telescópica, gire el anillo de cierre a la posición UNLOCK
- **Use LOCK position to lock wand in place**
  Use la posición LOCK para fijar la vara en su lugar
- **DO NOT overextend your reach with hose as it could tip vacuum**
  No extienda demasiado la extensión de la manguera porque puede causar que la aspiradora vuelque
- **The combination brush can be used with or without brush**
  Se puede usar el cepillo de combinación con o sin el cepillo

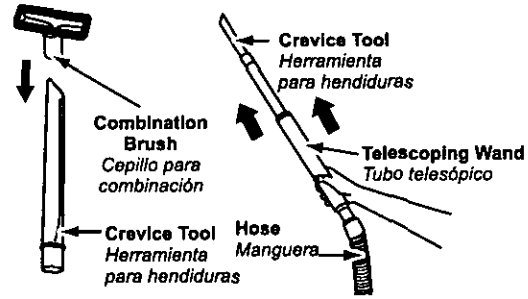

- **After using tools, remove hose from suction inlet by depressing tab on bottom of hose end, close suction inlet cover, and store tools on tool caddy**
  Después de usar las herramientas, saque la manguera de la entrada de succión apretando la lengüeta al extremo de la manguera, cierre la cubierta de la entrada de succión, y guarde las herramientas en la caja de herramientas

	CLEANING AREA / *Área para limpiar*				
TOOL / *Herramienta*	Furniture *Muebles*	Cushions *Cojines*	Drapes *Cortinas*	Stairs *Escaleras*	Walls *Paredes*
CREVICE TOOL *Herramienta para hendiduras*	X	X	X	X	X
COMBINATION BRUSH *Cepillo para combinación*	X		X	X	

Always clean tools before using / *Siempre limpie las herramientas antes de usarlas*

ROUTINE CARE OF CLEANER
Cuidado de rutina de la aspiradora

Performing the following tasks will keep your new Panasonic vacuum cleaner operating at peak performance levels and will ensure these high levels for years to come. Check the BEFORE REQUESTING SERVICE section in this manual for recommendations on performing some of these tasks to help solve various problems that may occur. Always unplug vacuum before servicing.

Siguiendo las instrucciones dadas, se nueva aspiradora Panasonic funcionará al nivel máximo y continuará funcionando por mucho años en el futuro. Lea la sección "Antes de pedir servicio" en este manual para las recomendaciones para arreglar unos problemas que puedan ocurrir. Siempre desconecte la aspiradora antes de hacer el servicio.

Cleaning Secondary Foam Filter
Limpieza del segundo filtro de goma espuma

- **Secondary foam filter protects motor**
  Le filtre secondaire en mousse protège le moteur
- **Check filter when installing a new dust bag**
  Al instalar una nueva bolsa de polvo revise el filtro
- **If dirty, pull filter from bottom of dust compartment and clean by rinsing in water**
  Si esté sucio, tire del filtro del fondo del compartimento de polvo y límpielo enjuagando con agua
- **When dry, slide filter back into place**
  Cuando esté seco deslice el filtro a su lugar
- **Ensure filter is fully inserted under plastic rib projections**
  Asegúrese de que el filtro está instalado debajo de las lengüetas plásticas

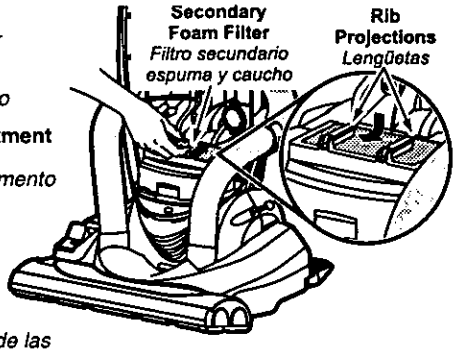

Replacing HEPA Exhaust Filter
Cambiar del filtro de escape HEPA

- **The HEPA exhaust filter removes dirt from recirculated air**
  El filtro de escape HEPA quita el polvo del aire reciclado
- **Check filter when installing a new dust bag**
  Revise el filtro al instalar una nueva bolsa de polvo
- **To remove, pull out on both sides of the exhaust filter cover**
  Para sacar, tire hacia afuera por ambos lados de la cubierta del filtro de escape
- **Grasp the exhaust filter and pull out to remove**
  Tome el filtro de salida y tire hacia afuera para sacarlo
- **Ensure grey edge is facing away from operator and replace filter into dust compartment. Push only on filter frame**
  Asegure que el borde gris mire a lo lejos del operador y reemplace el filtro adentrodel compartimiento del polvo.
- **Replace exhaust filter cover by snapping into place**
  Reemplace la cubierta del filtro de escape ajustándola en su lugar

***Filter cannot be cleaned and should be replaced at least once each year**
**No se puede limpiar el filtro y se debe cambiarlo a lo menos una vez cada año*

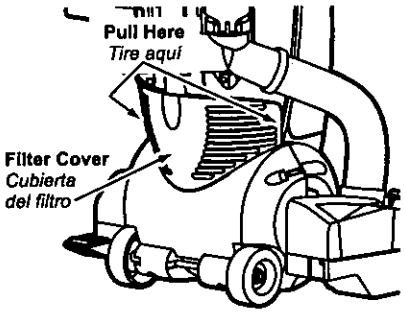

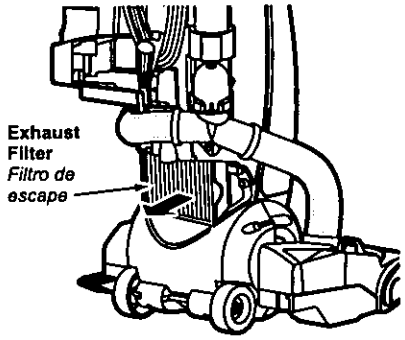

Changing Dust Bag
Cambio de la bolsa para polvo

Always operate vacuum with genuine Panasonic Type U3 Standard or U6 Electrostatic dust bags installed Panasonic dust bags may be purchased through any authorized Panasonic dealer or ordered from service company

Siempre opere la aspiradora con las bolsas Panasonic Type U3 Standard U6 Electrostatic instaladas Se puede comprar las bolsas de polvo en cualquier vendedor autorizado Panasonic o mandar de una compañía de servicio

1)
➤ **Pull outward on dust cover grip to remove the dust cover**
Empuje hacia afuera en la cubierta de polvo para quitarla

2)
➤ **Remove dust bag by grasping cardboard portion and pulling out**
Agarre la parte de cartón de la bolsa y empuje hacia afuera para quitar la bolsa de polvo

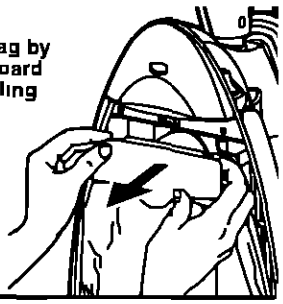

3)
➤ **Spread out new dust bag, taking care not to tear bag**
Extienda la nueva bolsa de polvo teniendo cuidado de no romper la bolsa

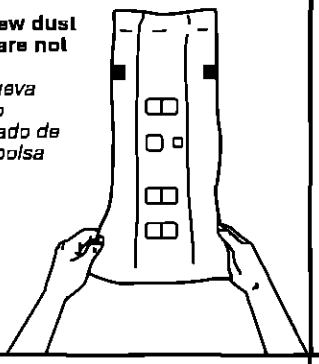

4)
➤ **Attach new dust bag onto bag holder by holding cardboard portion and pushing back and tuck in to dust compartment fully**
Ajuste la nueva bolsa del polvo al soporte de la bolsa tomando la porción de cartón y empujando hacia atrás y adentro del compartimiento del polvo completamente

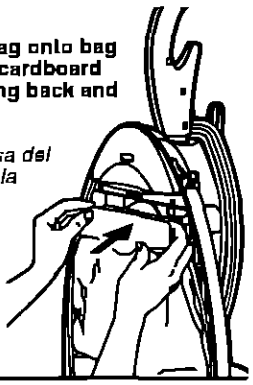

5)
➤ **Reinsert tabs on end of dust cover into grooves on dust compartment to allow cover to rotate closed**
Reinstale las lengüetas en el extremo de la cubierta de polvo en las ranuras en el compartimento de polvo para que la cubierta ruede hasta la posición cerrada

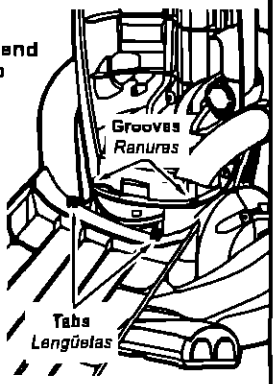

6)
➤ **Rotate dust cover up into closed position and press into place without pinching dust bag**
Ruede la cubierta de polvo hasta la posición cerrada y apriétela en su lugar sin apretar la bolsa de polvo

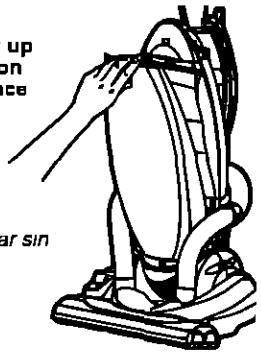

Replacing Belt / *Cambio de la correa*

- **Replace belt whenever a burning rubber smell caused by excessive slippage occurs**
  Cambie la corea cuando ocurra un olor de goma que quema causado por un patinaje excesivo
- **Remove belt cover by depressing tab and lifting off**
  Saque la cubierta de la correa apretando la lengüeta y levantándola hacia afuera
- **Remove worn or broken belt**
  Quite la correa gastada o rota
- **Loop new belt around motor shaft and pulley; see illustration for correct belt routing**
  Envuelva la correa nueva en el eje del motor y la polea, véase el diagrama para envolver la correa
- **Ensure that belt is not twisted or pinched**
  Asegure que la correa no esté enroscada o apretada
- **Reinstall belt cover and snap into place**
  Reinstale la cubierta de la correa y apriétela en su lugar
- **DO NOT operate cleaner without belt cover in place**
  No opere la aspiradora sin la cubierta de la correa en su lugar

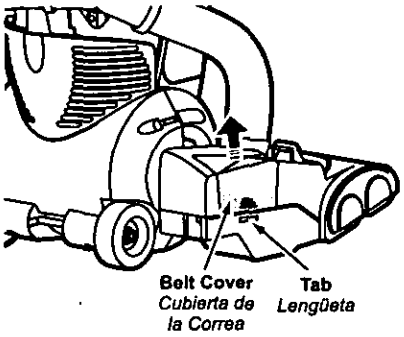

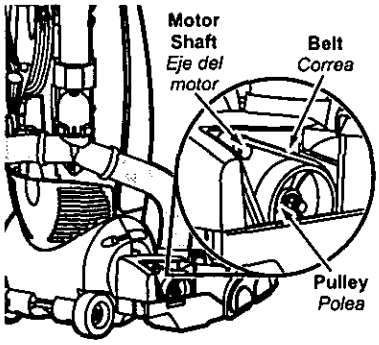

Replacing Headlight Bulb / *Cambio de la bombilla*

- **Pry out light lens at slots**
  Quite lente de luz en las ranuras
- **Remove old bulb from the socket by pushing in while turning counterclockwise**
  Quite la bombilla vieja del casquillo portalámparas al empujar hacia adentro y rodar en el sentido contrario de las agujas de reloj al mismo tiempo
- **Replace bulb by pushing in while turning clockwise**
  Reemplace la bombilla empujando hacia adentro y rodando en el sentido de las agujas de reloj al mismo tiempo
- **Only use a bulb rated 130 V AC-15 Watts or less**
  Use solamente una bombilla de 130 V AC-15 vatios o de menos voltios
- **Replace light lens by snapping into place**
  Reemplace lentes de luz empujándolos en su lugar

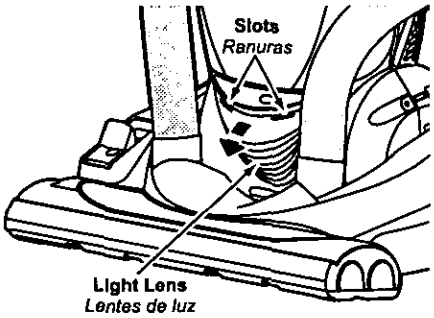

Cleaning Agitators / *Limpieza des agitadors*

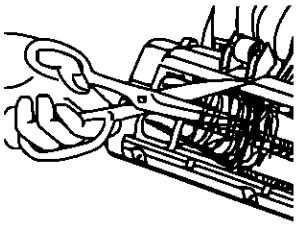

- **Clean agitators after every five uses**
  Limpie las agitadors después de cada cinco utilizaciones
- **Selector should be placed in BARE FLOOR (TOOLS) position**
  Se debe colocado el selector en la posición para BARE FLOOR (TOOLS)
- **Turn vacuum over**
  Vuelque la aspiradora
- **Cut off any carpet pile and lint entangled around agitators with a pair of scissors in the slots provided**
  Corte cualquier pelusa de alfombra e hilachas enredadas alrededor de los agitadores con un par de tijeras en las ranuras provistas

Cleaning Exterior and Tools
Limpieza del exterior y de los herramientas

- **Clean exterior using a clean, soft cloth that has been dipped in a solution of mild liquid detergent and water and wrung dry**
  Limpie la parte exterior con un trapo suave y limpio que se ha metido en una solución de detergente liquido y agua y se ha escurrido hasta que esté seco
- **DO NOT drip water on cleaner, wipe dry after cleaning**
  No deje caer el agua en la aspiradora, seque con un trapo después de limpiarla
- **DO NOT clean tools in dishwasher or clothes washer**
  No limpie las herramientas en el lavaplatos ni en la lavadora de ropa
- **Wash tools in warm soapy water, rinse and air dry**
  Lave las herramientas en la tibia agua con jabón, enjuague y seque al aire
- **DO NOT use tools if they are wet**
  No use las herramientas si están mojados

Cleaning Dirt Sensor Optics
Limpieza de los ópticos del sensor de polvo

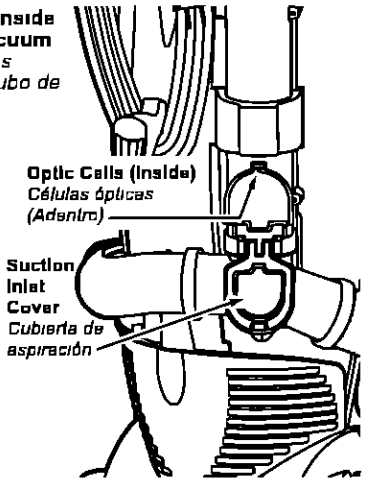

- **DIRT SENSOR optics consist of two optic cells located inside the suction inlet cover of dirt tube on the back of the vacuum**
  La optica del sensor de polvo consiste de dos células ópticas ubicadas adentro de la cubierta de entrada de succión del tubo de basura en la parte de atrás de la aspiradora
- **Optic cells should be cleaned when light stays red and when the dust bag is changed**
  Las células ópticas deben ser limpiadas cuando la luz permanece roja y cuando la bolsa de basura es cambiada
- **To clean, open the suction inlet cover**
  Para limpiar, abra la cubierta de aspiración
- **Wipe the optic cells with a soft, dry cloth**
  Limpie las células ópticas con un trapo suave y seco
- **DO NOT use cleaners or liquids**
  No use los limpiadores ni los líquidos
- **Close the suction inlet cover**
  Cierre la cubierta de aspiración

Removing Clogs

Quitar de los residuos de basura en los conductos

If the vacuum should become clogged:
Si la aspiradora está atascada:

- **Pull open suction inlet cover and check for clogging**
  Tire de la cubierta de aspiración y revise por los residuos
- **Check the nozzle hoses to make sure they are free from obstructions**
  Revise el boquillas de la manguera y quite los obstáculos
- **The nozzle hoses may be removed at either end in order to remove clogs**
  Las boquillas de las mangueras pueden sacarse de ambos extremos para quitar los obstáculos
- **Remove dust cover and dust bag**
  Saque la cubierta del polvo y la bolsa del polvo
- **Check bag holder area for clogging**
  Chequee el área del soporte de la bolsa por obstáculos
- **Replace dust bag if full**
  Reemplace la bolsa del polvo si está llena
- **Check and replace any clogged filters**
  Chequee y reemplace cualquier filtro bloqueado
- **Clean agitators**
  Limpie des agitadors

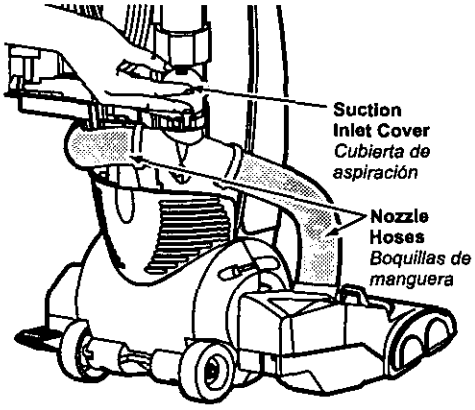

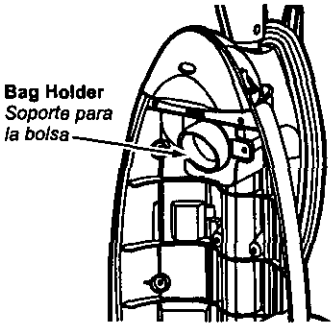

BEFORE REQUESTING SERVICE

WARNING *Electrical Shock or Personal Injury Hazard.*

Disconnect the electrical supply before servicing or cleaning the unit. Failure to do so could result in electrical shock or personal injury from cleaner suddenly starting.

Review this chart to find do-it-yourself solutions for minor performance problems. Any service needed, other than those described in these Operating Instructions, should be performed by an authorized service representative.

PROBLEM	POSSIBLE CAUSE	POSSIBLE SOLUTION
Cleaner will not run.	1. Unplugged at wall outlet.	1. Plug in firmly. Push ON-OFF switch to ON.
	2. ON-OFF switch not turned on.	2. Push ON-OFF switch to ON.
	3. Tripped thermal protector.	3. Unplug vacuum, wait thirty (30) minutes, plug in and switch to ON.
	4. Tripped circuit breaker/blown fuse at household service panel.	4. Reset circuit breaker or replace fuse.
Poor job of dirt pickup.	1. Full or clogged dust bag.	1. Change bag.
	2. Broken belt.	2. Replace belt.
	3. Carpet-bare floor setting incorrect.	3. Set in the correct position.
	4. Clogged hose or nozzle.	4. Clean hose or nozzle area.
	5. Hose not inserted fully.	5. Insert hose.
	6. Worn agitator.	6. Replace agitator.
	7. Hole in hose.	7. Replace hose.
	8. Dust cover improperly installed.	8. Properly install dust cover.
	9. Belt not installed on motor shaft.	9. Install belt on motor shaft.
Dust escapes the paper bag.	1. Bag improperly installed.	1. Properly install bag.
	2. Bag torn.	2. Replace bag.
Light will not work.	1. Burned out light bulb.	1. Replace light bulb.
Dirt sensor will not work.	1. Dirty optic cells.	1. Clean optic cells.

Panasonic Vacuum Cleaner Limited Warranty

Panasonic Home and Commercial Products Company (collectively referred to as "the warrantor") will repair this product with new or refurbished parts free of charge, in the U.S.A. or Puerto Rico for one (1) year from the date of original purchase in the event of a defect in materials or workmanship.

This Limited Warranty Excludes both Labor and Parts for the following items which require normal replacement: Disposable Dust Bag, Filters, Belts, Light Bulbs, Agitator Brushes and Batteries (if supplied).

Carry-in or mail-in service in the U.S.A. can be obtained during the warranty period by contacting a Panasonic Services Company (PASC) Factory Servicenter listed in the Servicenter Directory. Or call, toll free, 1-800-211-PANA (7262) to locate a PASC Authorized Servicenter. Carry-in or mail-in service in Puerto Rico can be obtained during the warranty period by calling the local Panasonic Sales Company telephone number listed in the Servicenter Directory.

This warranty is extended only to the original purchaser. A purchase receipt or other proof of date of original purchase will be required before warranty performance is rendered.

This warranty only covers failures due to defects in materials and workmanship which occur during normal use and does not cover damages which occur in shipment, or failures which are caused by products not supplied by the warrantor, or failures which result from accident, misuse, abuse, neglect, mishandling, misapplication, faulty installation, improper operation or maintenance, alteration, modification, power line surge, improper voltage supply, lightning damage, commercial use such as hotel, office, restaurant or other business or rental use of the product, or service by anyone other than a PASC Authorized Servicenter, or damage that is attributable to acts of God.

LIMITS AND EXCLUSIONS:
There are no express warranties except as listed above.
THE WARRANTOR SHALL NOT BE LIABLE FOR INCIDENTAL OR CONSEQUENTIAL DAMAGES RESULTING FROM THE USE OF THIS PRODUCT, OR ARISING OUT OF ANY BREACH OF THIS WARRANTY. ALL EXPRESS AND IMPLIED WARRANTIES, INCLUDING THE WARRANTIES OF MERCHANTABILITY AND FITNESS FOR A PARTICULAR PURPOSE, ARE LIMITED TO THE APPLICABLE WARRANTY PERIOD SET FORTH ABOVE.

Some states do not allow the exclusion or limitation of incidental or consequential damages, or limitations on how long an implied warranty lasts, so the above exclusions or limitations may not apply to you.

This warranty gives you specific legal rights and you may also have other rights which vary from state to state. If a problem with this product develops during or after the warranty period, you may contact your dealer or Servicenter. If the problem is not handled to your satisfaction, then write to the Consumer Affairs Department at the listed address on the back cover.

WHAT TO DO WHEN SERVICE IS NEEDED
Cuando necesita servicio

If your Panasonic Vacuum Cleaner needs service, look in the yellow pages of the telephone book under HOME APPLIANCE SERVICE for your nearest Panasonic Services Company ("PASC") Factory Servicenter, or PASC authorized Servicenter, or call, 1-800-211-PANA (7262) toll free to find a convenient servicenter. DO NOT send the product to the Executive or Regional Sales offices. They are NOT equipped to make repairs.

Si su aspiradora Panasonic necesita servicio, busque el Centro de Servicio Panasonic o un Centro de Servicio PASC autorizado más cercano bajo "Servicio de Eléctrodomésticos" en las páginas amarillas de la guía de teléfonos o llame gratis al 1-800-211-PANA (7262) para encontrar un centro de servicio conveniente. No mande el producto a las Executive o Regional Sales Offices. No están equipadas para arreglar estos productos.

If you ship the product

Carefully pack and send it prepaid, adequately insured and preferably in the original carton. Attach a postage-paid letter to the outside of the carton, which contains a description of your complaint. DO NOT send the product to the Executive or Regional Sales Offices. They are NOT equipped to make repairs.

Si manda el producto

Empaquete con cuidado en el cartón original si posible y mándelo prepagado y con seguro suficiente. Ponga una carta con sellos en la que describe su problema con el producto en el exterior del cartón. No mande el producto a las Executive o Regional Sales Offices. No están equipadas para arreglar estos productos.

Customer's Record / *Récord de Comprador*

Model No. / *Número de Modelo* _____ **Dealer's Name** / *Nombre del Vendedor* _____

Serial No. / *Número de Serie* _____

Dealer's Address / *Dirección del Vendedor* _____

Date of Purchase / *Fecha de Compra* _____

PANASONIC HOME & COMMERCIAL PRODUCTS COMPANY, DIVISION OF MATSUSHITA ELECTRIC CORPORATION OF AMERICA

One Panasonic Way
Secaucus, New Jersey 07094
World Wide Web Address
http://www.panasonic.com

PANASONIC SALES COMPANY, MATSUSHITA ELECTRIC OF PUERTO RICO INC.

Ave. 65 de infanteria, Km 9.5
San Gabriel Industrial Park
Carolina, Puerto Rico 00985

ACØ1ZBDNZØU
CØ1ZBDNØØUØØ

Printed in U.S.A.
Impreso en EUA