This Owner's Manual is provided and hosted by Appliance Factory Parts.

Appliance Factory Parts
Experts in BBQ, Humidifier, & Appliance Parts
1-800-955-7075

Royal 089400 Owner's Manual

Shop genuine replacement parts for Royal 089400

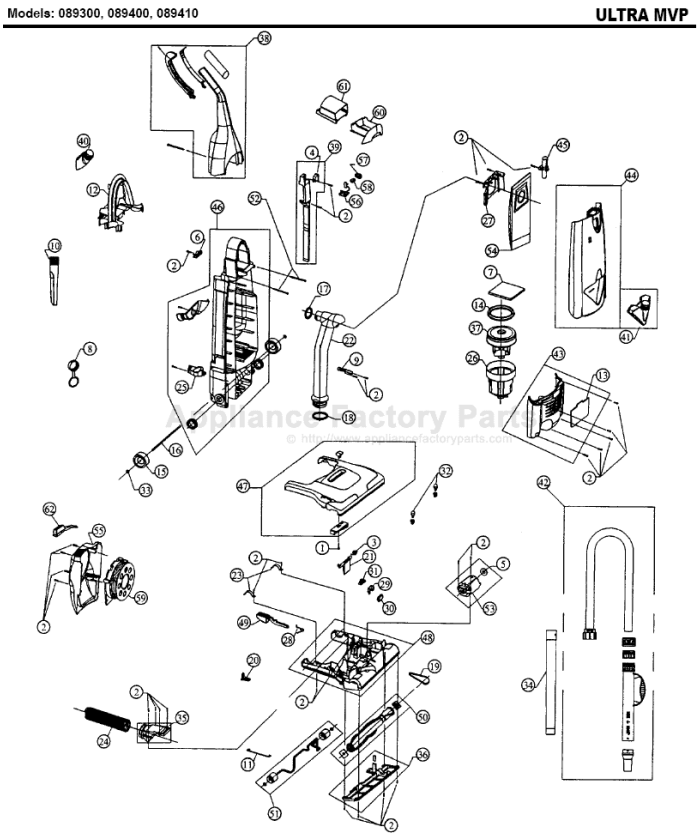

Find Your Royal Vacuum Cleaner Parts - Select From 772 Models

-------- Manual continues below --------

ROYAL

Models: 089300, 089400, 089410

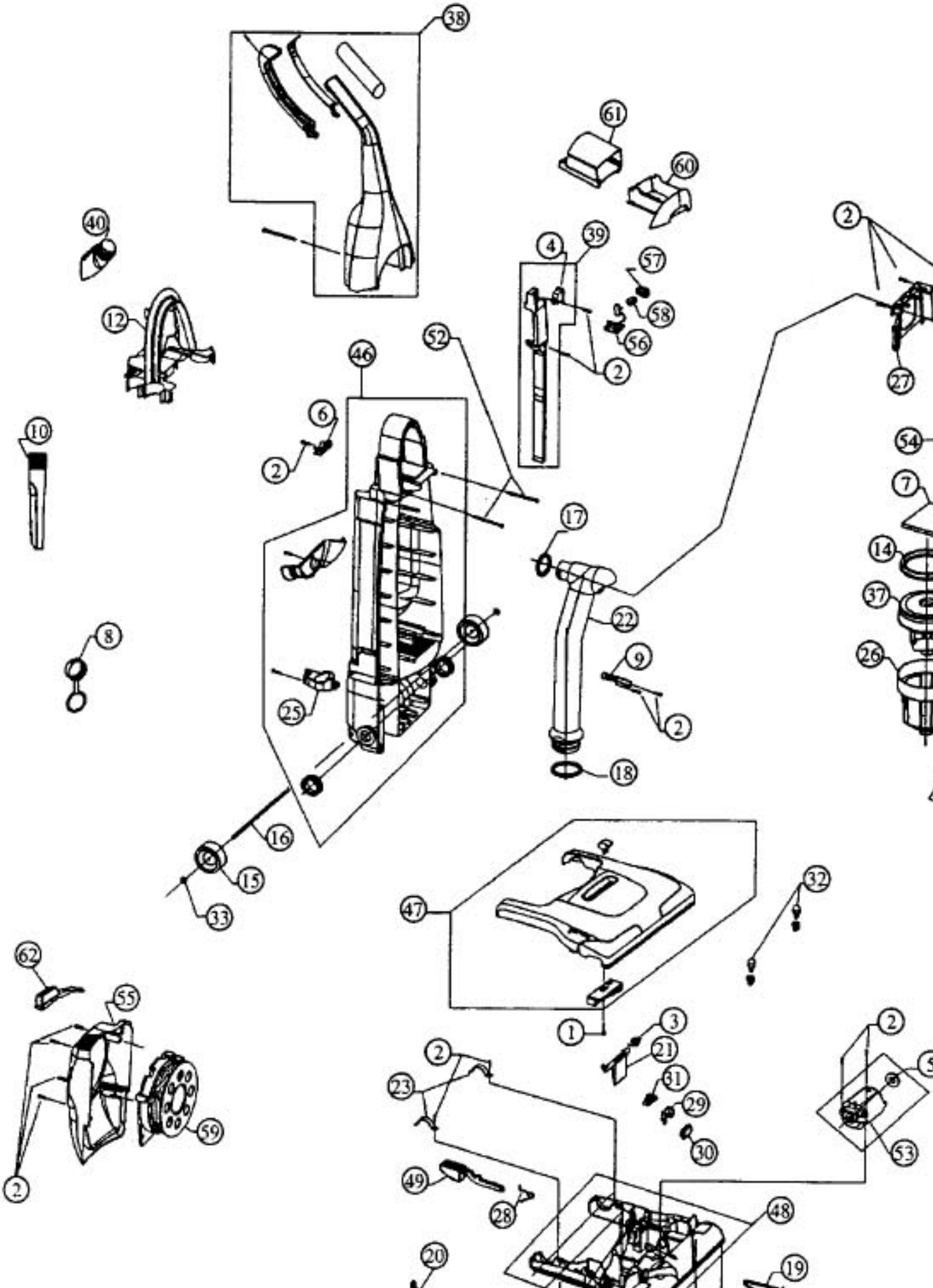

ROYAL

Models: 089300, 089400, 089410

1	R-250100	Screw, body
2	R-503819	Screw, body
3	NLA	Return Spring
4	R-720128	Switch
5	NLA	Seal, motor
6	R-920005	Clamp, strain relief
7	R-920010	Filter, bag chamber
8	NLA	Cap, hose
9	R-920030	Clamp, dirt tube
10	R-920035	Tool, crevice
11	R-920055	Linkage, door
12	R-920080	Caddy, rear
13	NLA	Filter, motor cover
14	R-920090	Gasket, motor
15	R-920095	Wheel, rear
16	R-920100	Axle, rear
17	R-920105	Gasket, top dirt tube
18	NLA	Gasket, bottom dirt tube
19	NLA	Belt
20	NLA	Actuator, linkage
21	NLA	Door, dirt passage
22	R-920130	Dirt, tube
23	R-920140	Clamp, pivot
24	R-920145	Hose, dirt passage
25	NLA	Holder, hose & wand
26	R-920196	Motor Shroud
27	R-920296	Holder, bag
28	R-920410	Spring, handle release
29	NLA	Jacket, switch
30	NLA	Switch, brush roll
31	NLA	Terminal Block
32	R-920906	Bulb, wedge base
33	R-801711A	Wheel Retainer Cap
34	R-820480	Telescopic Wand
35	R-120060	Dirt Passage Cover Assy
36	R-920135	Noz
37	NLA	Mot
38	R-940065	Han
38	R-940065	Han
39	R-920200	Swit
39	R-940200	Swit
40	R-920215	2 in
41	R-20225A	Tria
41	R-920225	Tria
42	R-920240	Hos
43	R-20275A	Fro
43	R-920275	Fro
44	R-920280	Fro
44	R-940280	Fro
45	R-920300	Mec
46	NLA	Bac
47	R-920330	Noz
47	R-40330A	Noz
47	R-403303	Noz
48	R-920360	Noz
49	R-920365	Han
50	R-920375	Brus
51	NLA	Heig
52	R-920500	Scre
53	R-920700	Mot
54	R-920047	Pap
55	R-940405	Hou
56	R-940415	Vari
57	R-940416	Butt
58	R-940430	Fast
59	R-940400	Cor
60	R-940070	Dra
60	R-400703	Dra
61	R-940071	Sup
62	R-940403	Butt