This Owner's Manual is provided and hosted by Appliance Factory Parts.

Appliance Factory Parts
Experts in BBQ, Humidifier, & Appliance Parts
1-800-955-7075

Royal 733
Owner's Manual

Shop genuine replacement parts for Royal 733

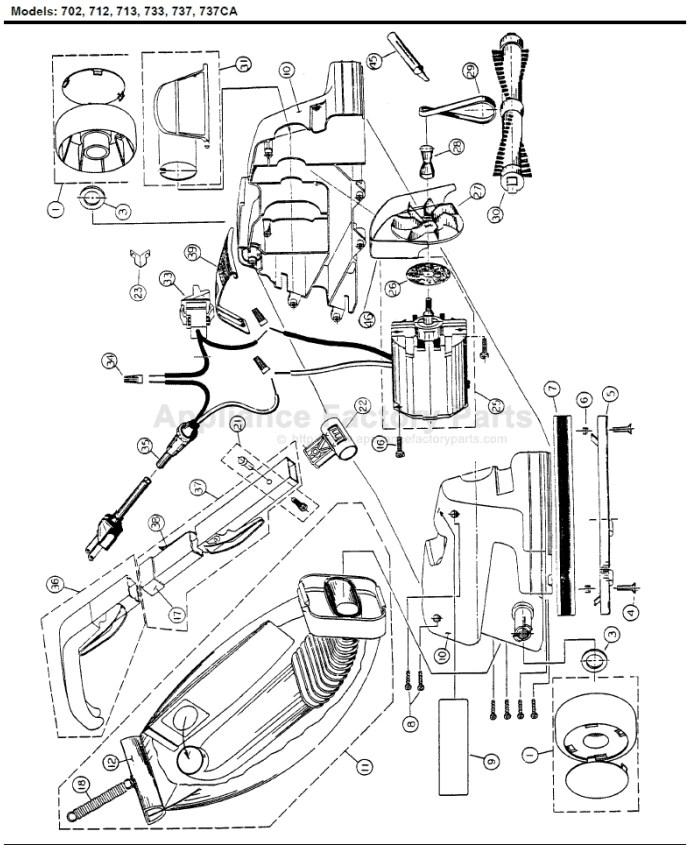

Find Your Royal Vacuum Cleaner Parts - Select From 772 Models

-------- Manual continues below --------

ROYAL

Models: 702, 712, 713, 733, 737, 737CA

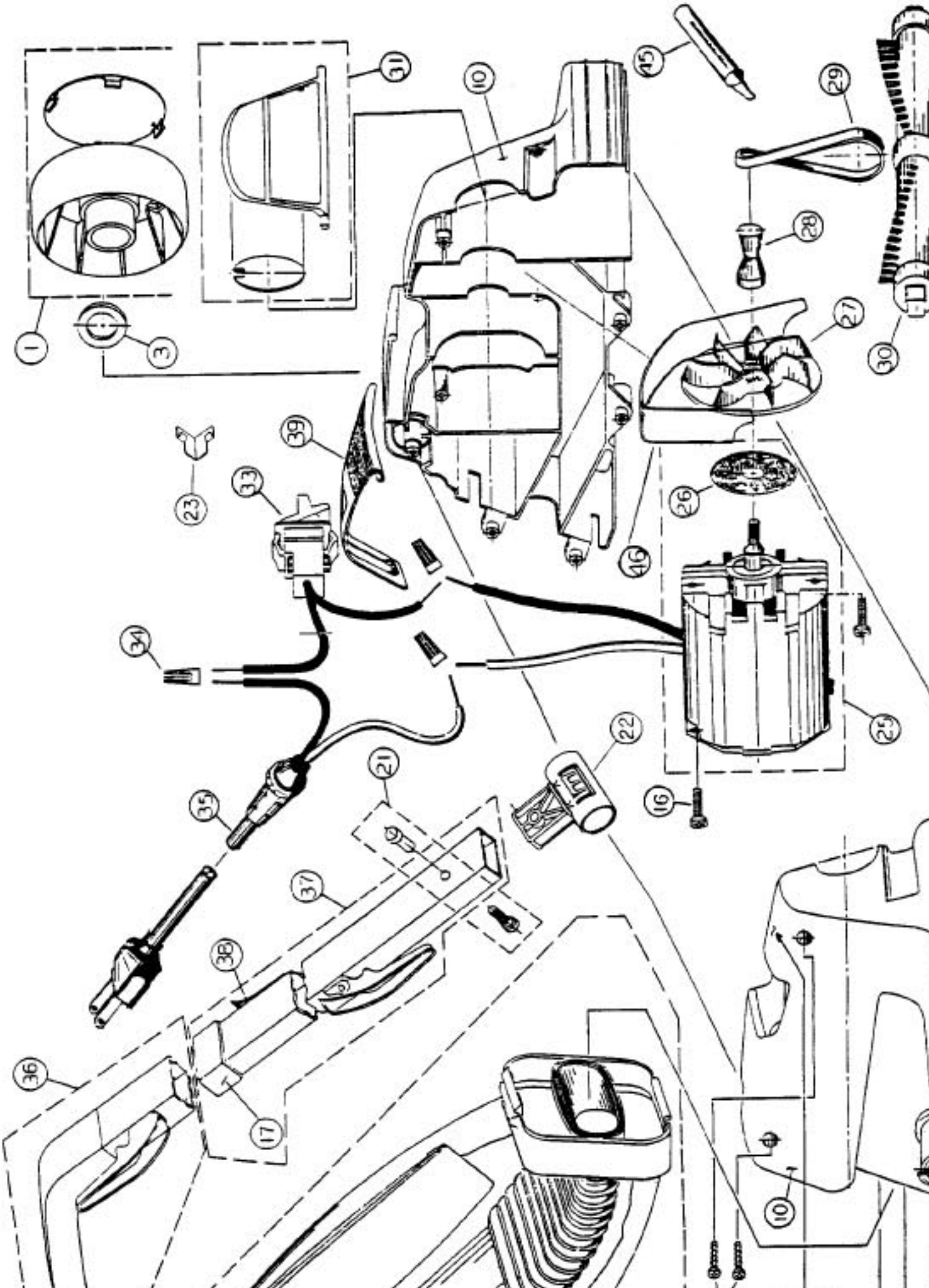

ROYAL

Models: 702, 712, 713, 733, 737, 737CA

1	R-701510	Wheel & Hubcap Assy, 702, 712, 733
1	NLA	Wheel & Label Assy, 713
1	R-733510	Wheel & Hubcap Assy, 737/CA
3	R-260100	Wheel Felt
4	R-503319	Screw Guard
5	R-701270	Nozzle Guard Assembly
6	R-503019	On-Sert
7	R-701201	Bumper
8	R-503819	Screw, body
9	NLA	Label, "Broom Vac", 702, 712
9	NLA	Label, 713
9	NLA	Label, 733, 737/CA
10	NLA	Housing Assy, red, 702, 712
10	NLA	Housing Assy, black, 713
10	R-702100A	Housing Assy, blue, 733
10	NLA	Housing Assy, blue, 737/CA
11	R-712363	Bag Assembly, 702, 712
11	NLA	Bag Assembly, 713
11	R-073335	Bag Assembly, 733, 737/CA
12	NLA	Clamp, bag
16	R-503618	Screw
17	R-701585	Sleeve
18	R-733555	Spring
21	R-701590	Screw & Locknut Assy
22	R-2701534	Pivot, handle
23	R-701533	Clip, pivot
24	R-713555	Spring, pivot
25	NLA	Motor & Seal Assembly
26	R-503266	Seal, felt
27	R-722004	Fan, 712, 713, 733, 737/CA
27	R-722004	Fan, 702
28	R-722004	Shaft Exter
29	NLA	Belt
30	NLA	Revolving
30	NLA	Revolving
31	NLA	Door & Sea
31	R-2713505	Door & Sea
31	NLA	Door & Sea
33	NLA	Switch Ass
	NLA	Switch Ass
35	R-010336	Cord Assy,
35	R-010336	Cord Assy,
35	R-010336	Cord Assy,
36	NLA	Upper Tube
36	NLA	Upper Tube
36	NLA	Upper Tube
37	R-7035823	Lower Tube
37	NLA	Lower Tube
37	R-703582	Lower Tube
38	R-703605	Snap Butto
39	NLA	Shroud, 71
46	NLA	Stone Shei
	R-702707	Label, "#80
	R-880262	Belt Lifter
	R-070147	Paper Bag,
	R-070275	Paper Bag,
	R-070148	Paper Bag,
	720	Paper Bag,