This Owner's Manual is provided and hosted by Appliance Factory Parts.

Appliance Factory Parts
Experts in BBQ, Humidifier, & Appliance Parts
1-800-955-7075

Broilmaster T3CA Owner's Manual

Shop genuine replacement parts for Broilmaster T3CA

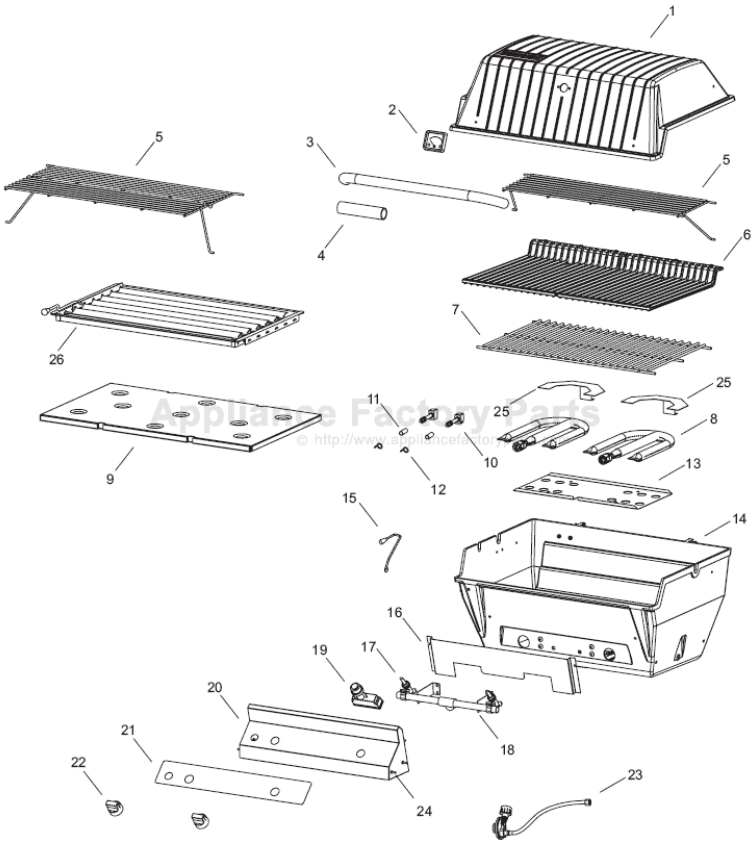

Find Your Broilmaster Grill Parts - Select From 310 Models

-------- Manual continues below --------

OPTIONS By Broilmaster

BROILMASTER®
PREMIUM GAS GRILLS

Premium "T" Gas Grill Owner's Manual

MODELS:
T3-2, T3W-2, T3N-2, T3WN-2,
T3C-2, T3CW-2, T3CN-2, T3CWN-2,
T3CF-2, T3CFW-2, T3CFN-2, T3CFWN-2,
T3CA-2, T3CAW-2, T3CAN-2, T3CAWN-2

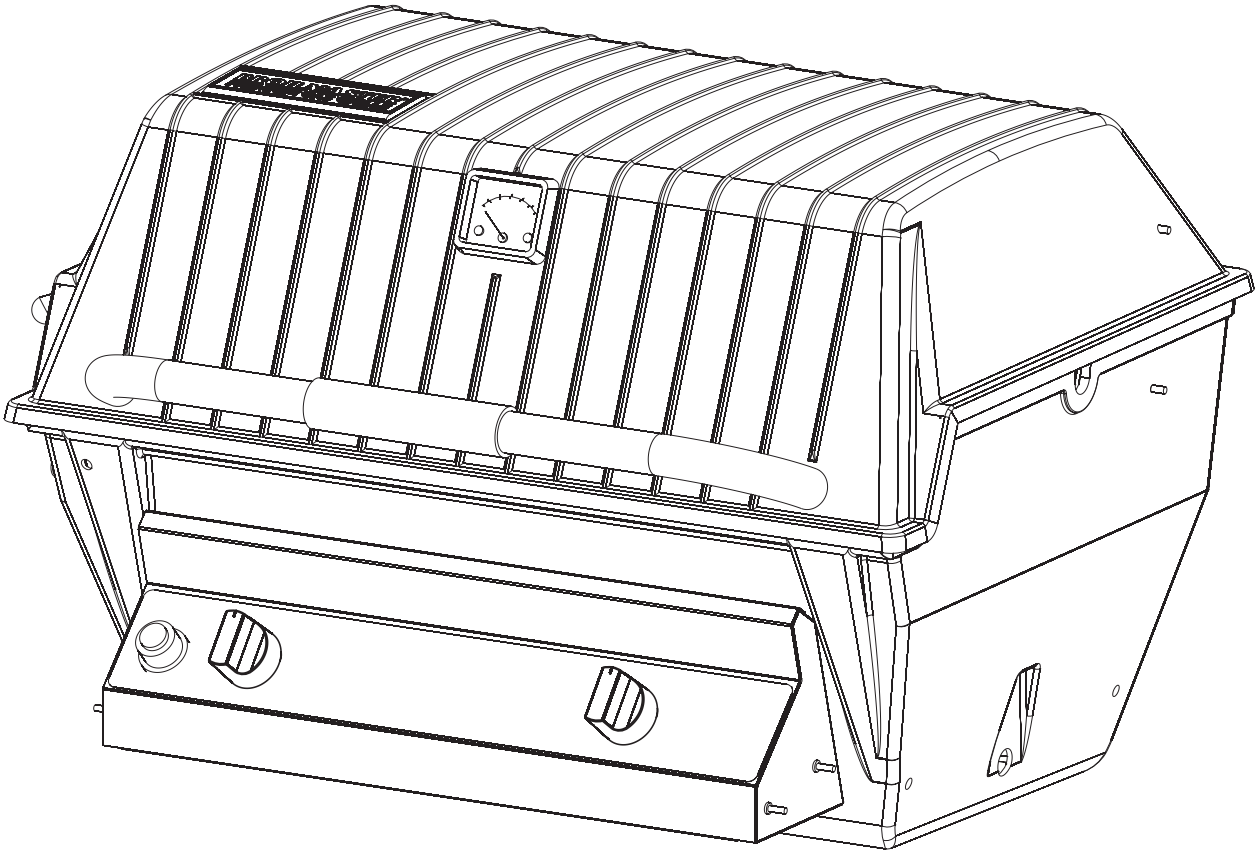

GAS-FIRED

C UL US

LISTED

IMPORTANT

This manual should be read thoroughly by the person installing the grill and all persons who will use and maintain the grill. The installer should be sure the manual is left in the possession of the user. The user should retain this manual for future reference when using or cleaning the grill and to properly identify any repair parts that may be required.

WARNING

Reference this manual for proper installation and maintenance instructions. Improper installation, adjustment, alteration, service or maintenance can cause personal injury or property damage. For assistance or additional information consult a qualified installer, service agency or the gas supplier.

! DANGER

IF YOU SMELL GAS:

1. **Shut off gas to the appliance.**
2. **Extinguish any open flame.**
3. **Open the grill lid.**
4. **If odor continues, keep away from the appliance and immediately call your gas supplier or fire department.**

! WARNING

1. **Do not store or use gasoline or other flammable liquids or vapors in the vicinity of this or any other appliance.**
2. **An LP cylinder not connected for use shall not be stored in the vicinity of this or any other appliance.**

CAUTION:

Parts may have sharp edges. Wear leather work gloves and handle parts carefully during the unpacking, assembly and installation.

WARNING

Broilmaster® Gas Grills must ONLY use propane cylinders equipped with an Overfill Protection Device (OPD). Use only a reputable propane dealer when exchanging or filling cylinders. An overfilled or improperly filled propane cylinder can be dangerous.

Congratulations!

Welcome to the beauty, durability, and prestige of a Premium Gas Grill by Broilmaster®. With award-winning excellence built into every feature and durability that surpasses other Premium gas grills, Broilmaster has manufactured the ultimate gas grill for discriminating outdoor chefs for over 30 years.

At Broilmaster, we continually strive to enhance the performance and quality of our products for your grilling enjoyment. Every effort will be made to ensure that Broilmaster continues to be your choice as the Premium grill of the future.

Whether you are at the lake or in the privacy of your own backyard, the Broilmaster Premium Gas Grill performs far beyond the ordinary and is designed to provide your family with years of outdoor cooking pleasure.

Thank You!

Table of Contents

Congratulations!

You have chosen the finest grill for your outdoor cooking pleasure. Please take time to read this entire manual before assembling your Premium Broilmaster gas grill.

Hardware Package 5

Parts Diagram 6

Parts List 7

Grill Assembly 8-12

Propane Gas Grills 13-15

Gas Conversion 16

Natural Gas Grills 17

Operation- Propane & Natural Grills 18-19

Maintenance 20

Troubleshooting 21

Warranty 22

Notes 23

Your Broilmaster Premium Gas Grill is identified by model number, serial number, and gas type. This information is provided on a product identification label located on the grill's control panel. For your convenience, complete this section for future reference when contacting your dealer.

Model No. _____ Dealer _____

Serial No. _____ Dealer Phone No. _____

Gas Type: Propane _____ Natural _____ Date of Purchase _____

Hardware Package

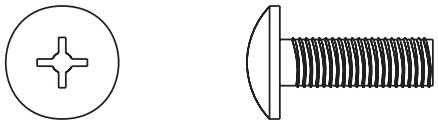

B072217 SCREW 1/4-20 X 3/4 PH TRUSS HEAD SS

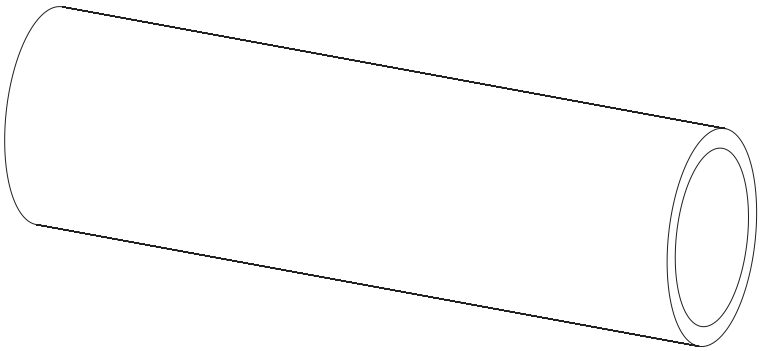

B073097 FOAM GRIP

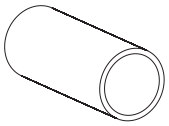

B101082 SPACER, IGNITOR

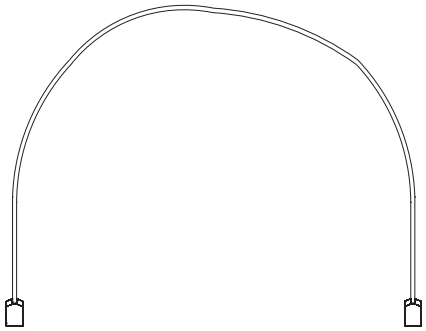

B101048 WIRE, IGNITOR GROUND

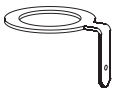

B069747 LUG, IGNITOR GROUND

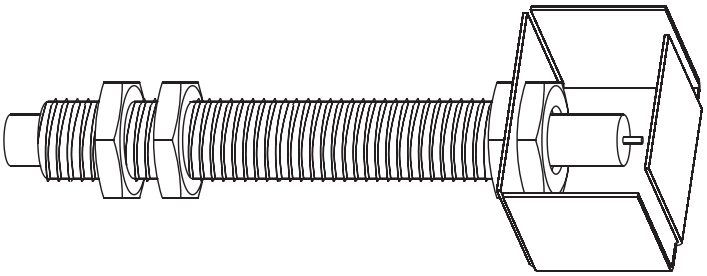

B101212 COLLECTOR BOX ASSEMBLY

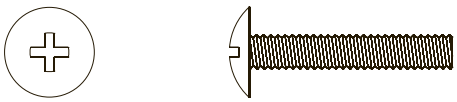

B073978 SCREW #10-24 X 1 PHILLIPS TRUSS STAINLESS

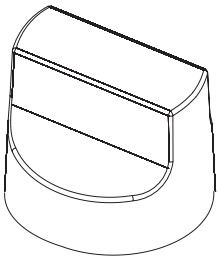

R3918 KNOB

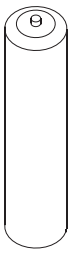

B076529 BATTERY, AA

Parts Diagram

All repair part orders should be placed through your local Broilmaster dealer. To locate a dealer in your area, contact Broilmaster Customer Service at 800-851-3153 • www.broilmaster.com. To ensure prompt and accurate service, please provide the following information when placing a repair part order: Model Number, Serial Number, Part Name, Part Number, and Quantity of parts needed.

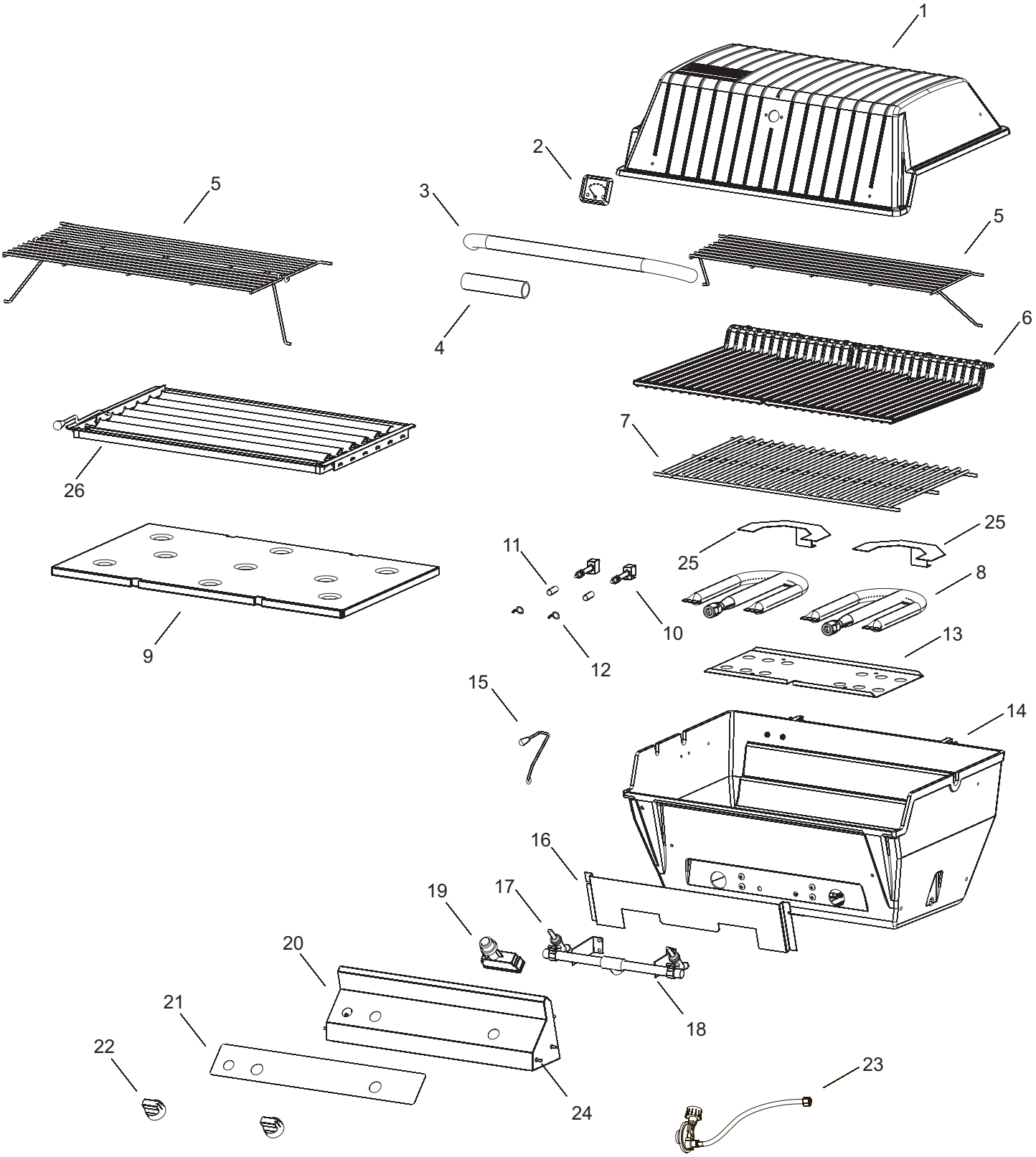

Parts List

Index No.	Description	Part Number							
		T3 & T3W	T3C & T3CW	T3CF & T3CFW	T3CA & T3CAW	T3N & T3WN	T3CN & T3CWN	T3CFN & T3CFWN	T3CAN & T3CAWN
1	Grill Body Top - Black	B101039	B101039	B101039	B101039	B101039	B101039	B101039	B101039
2	Heat Indicator (Stainless)	B101118	B101118	B101118	B101118	B101118	B101118	B101118	B101118
3	Lid Handle (Stainless)	B070486	B070486	B070486	B070486	B070486	B070486	B070486	B070486
4	Foam Grip	B073097	B073097	B073097	B073097	B073097	B073097	B073097	B073097
5	Retract-A-Rack	B100594	B072695	B072695	B072695	B100594	B072695	B072695	B100594
6	Cooking Grid (Single)	B101053	B101053	B101053	B101053	B101053	B101053	B101053	B101053
7	Briquet Rack	B101061	B101061	N/A	B101061	B101061	B101061	N/A	B101061
8	Burner	B101030	B101030	B101030	B101030	B101030	B101030	B101030	B101030
9	Flavor Screen	N/A	N/A	DPA103	N/A	N/A	N/A	DPA103	N/A
10	Collector Box Assembly	B101212	B101212	B101212	B101212	B101212	B101212	B101212	B101212
11	Ignitor Spacer	B101082	B101082	B101082	B101082	B101082	B101082	B101082	B101082
12	Ground Lug	B069747	B069747	B069747	B069747	B069747	B069747	B069747	B069747
13	Radiation Shield	B101045	B101045	B101045	B101045	B101045	B101045	B101045	B101045
14	Grill Body Bottom - Black	B101044	B101044	B101044	B101044	B101044	B101044	B101044	B101044
15	Lid Stop Kit	N/A	DPA106	DPA106	DPA106	N/A	DPA106	DPA106	DPA106
16	Valve Shield	B101046	B101046	B101046	B101046	B101046	B101046	B101046	B101046
17	Valve Assembly (No Orifice)	B101042	B101042	B101042	B101042	B101042	B101042	B101042	B101042
18	Manifold And Valve Assembly	B101040	B101040	B101040	B101040	B101112	B101112	B101112	B101112
19	Electronic Ignitor	B072218	B072218	B072218	B072218	B072218	B072218	B072218	B072218
20	Control Panel Assembly	B101033	B101066	B101066	B101066	B101033	B101066	B101066	B101033
21	Control Panel Label	B101028	B101028	B101028	B101028	B101028	B101028	B101028	B101028
22	Valve Knob	R3918	R3918	R3918	R3918	R3918	R3918	R3918	R3918
23	Hose And LP Regulator	B069756	B069756	B069756	B069756	N/A	N/A	N/A	N/A
24	Pin, Shelf	B073963	B073963	B073963	B073963	B073963	B073963	B073963	B073963
25	Burner Shield	B101154	B101154	B101154	B101154	B101154	B101154	B101154	B101154
26	Smoker Shutter	N/A	N/A	N/A	B100445	N/A	N/A	N/A	B100445
Not Shown	Char-Master Briquets	B058122	B058122	N/A	B058122	B058122	B058122	N/A	B058122
Not Shown	Hardware Pack	B101218	B101218	B101218	B101219	B101219	B101219	B101219	B101219
Not Shown	Ignitor Ground Wire	B101048	B101048	B101048	B101048	B101048	B101048	B101048	B101048
Not Shown	Bridge Pin	B057805	B057805	B057805	B057805	B057805	B057805	B057805	B057805
Not Shown	Hinge Pin	B057804	B057804	B057804	B057804	B057804	B057804	B057804	B057804
Not Shown	Natural Gas Conversion Kit	B101062	B101062	B101062	B101062	N/A	N/A	N/A	N/A
Not Shown	Orifice, LP 1.25mm	B101111	B101111	B101111	B101111	N/A	N/A	N/A	N/A
Not Shown	Orifice, NAT #49	N/A	N/A	N/A	N/A	B101063	B101063	B101063	B101063
Not Shown	Stainless Steel Cooking Grid (Single) - "W" Models Only	B101282	B101282	B101282	B101282	B101282	B101282	B101282	B101282

Grill Assembly

Before You Begin

All Broilmaster grills require some assembly and installation. Follow all instructions unless noted to apply only to other specific models.

If you purchased an accessory with your Broilmaster, follow the instructions provided with the accessory for assembly and installation. If an instruction refers to a step that is not required for your grill model, please continue to the next step.

In each step, parts are identified with "Key" numbers. Key numbers appear in parenthesis after a part name is mentioned for the first time in the instructions. You can reference each part by its key number on the Parts List if you need help in identifying a part.

Compare the parts found in the shipping container to the parts list provided. If any parts are missing contact your Broilmaster dealer before beginning assembly.

CAUTION: FOR YOUR SAFETY
Parts may have sharp edges. Wear leather work gloves and handle parts carefully during the unpacking, assembly and installation.

Recommended Tools

These items are recommended for the assembly of your grill:

- Phillips screwdriver
- Adjustable wrench set
- Socket set
- Soapy water solution (to test for leaks)
- Liquid soap (for foam grip)

Grill Mountings

Assemble your base option before assembling your Broilmaster grill head.

Refer to the Broilmaster Cart, Base, and Post instructions provided with each accessory for assembly, installation, and mounting procedures.

Grill Assembly

1. Mount grill onto cart, post or base per the mounting instructions.
2. Place radiation shield (13) (flange side up) onto four raised bosses located on the interior bottom of the grill. Secure with four 1/4-20 x 3/4 screws. See Figure 1.

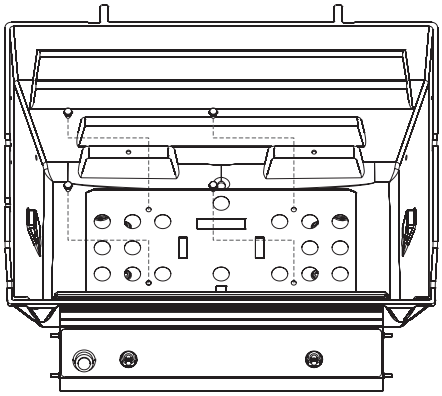

Figure 1

3. Place burners (8) into grill and insert burner tubes over orifice fittings on valve (17). Secure each burner and burner shield (25) with one (1) 1/4-20 x 3/4 phillips screw. See Figures 2, 3 and 4.

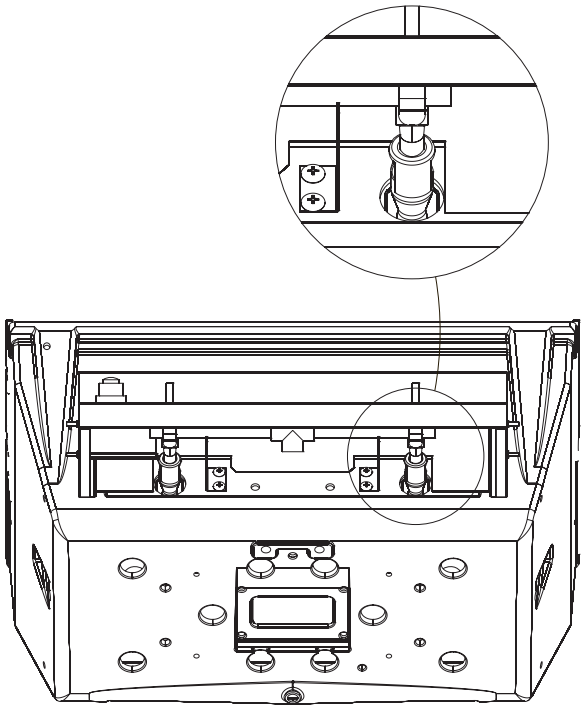

Figure 3

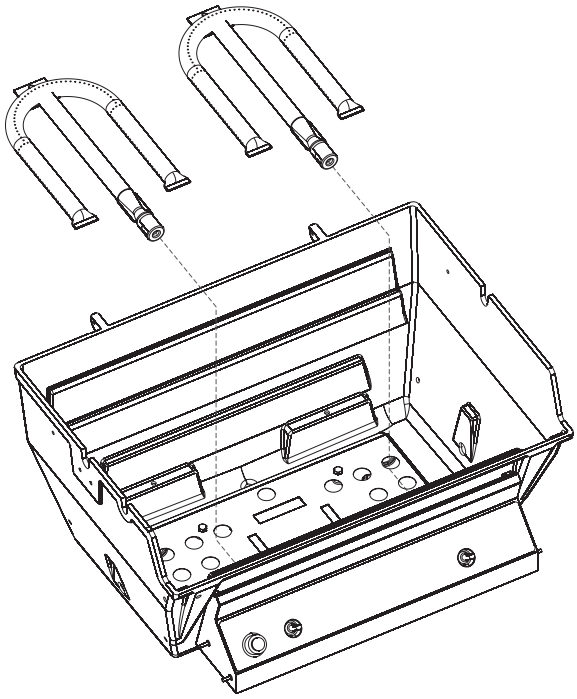

Figure 2

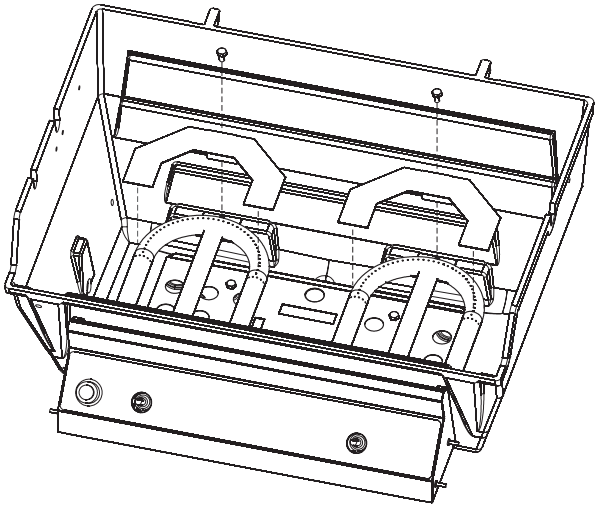

Figure 4

4. Slide ignitor spacers (11) onto collector box assemblies (10) and secure with nuts. See Figure 5.
   Attention: Do not cut or damage ignitor wires.

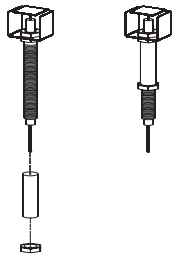

Figure 5

5. Insert collector box assemblies into holes adjacent to burners. The opening of the collector box should be facing the burner. See Figure 6.

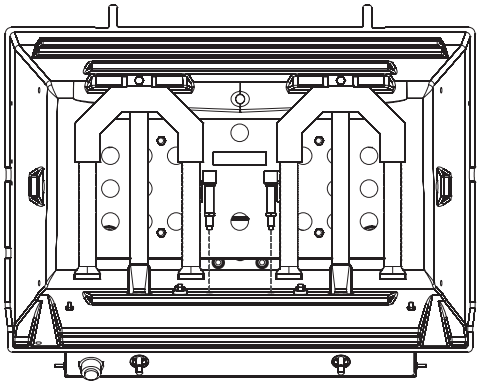

Figure 6

6. Attach ignitor ground wire ends onto ground lugs. Slide ground lugs (12) over ignitor wires and onto collector box assemblies. Slide nuts over ignitor wires and secure collector box assemblies to grill. See Figure 7.

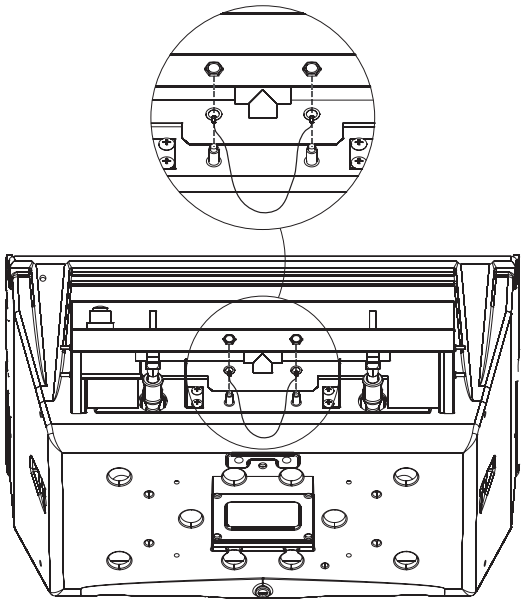

Figure 7

7. Remove ignitor from the control panel by unscrewing the ignitor button and nut. Attach ignitor wires to terminals on the ignitor. See Figure 8.

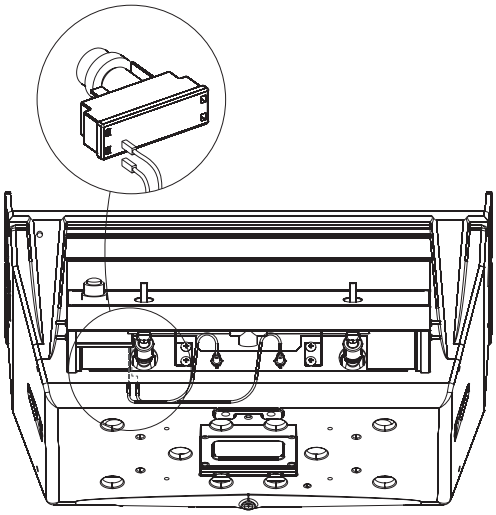

Figure 8

8. Re-attach the ignitor to the control panel , then tighten nut and insert AA battery, positive side down, and replace ignitor button. See Figure 9.

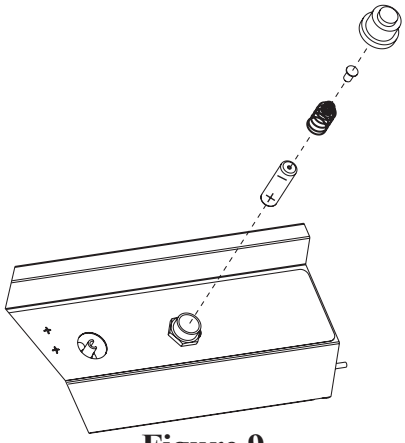

Figure 9

9. Install foam grip (4) on lid handle (3). See Figure 10. **Tip:** For ease of installation, slightly lubricate the lid handle with liquid soap before pushing the foam grip into place.

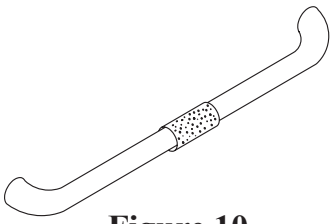

Figure 10

10. Fasten the lid handle to the grill body top (1) with two #10-24 x 1" screws. See Figure 11.

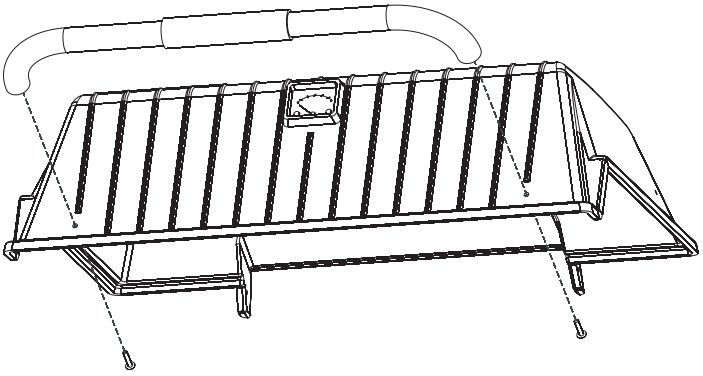

Figure 11

11. Place the briquet rack (7) or flavor screen (9) over the burners. See Figure 12.
12. T3 and T3C models only: Position the Char-Master briquets evenly on the briquette rack without overlapping. See Figure 12.
13. T3CA models only: Position Smoker Shutter (26) see the DPA100 instruction manual included with the T3CA grills. See Figure 12.
14 Set the cooking grids (6). See Figure 12.
15. Push valve knobs (22) on to valves.

Installing Char-Master Briquets

Individually place the 'Char-Master' briquets in a single layer evenly on your grill's briquet rack; DO NOT dump them onto the briquet rack. A single layer of 'Char-Master' briquets is all that's needed. DO NOT overlap or stack the briquets. See Figure 12.

After properly placing the 'Char-Master' briquets on your grill's briquet rack, there may be some briquets left over. Save them for future use.

Before cooking, always preheat the grill as directed by the grill's operating instructions. Hot briquets cause better, quicker cooking and better flavor.

Cleaning

Routine preheating and routine burn-off (also called post heating) of a grill will clean the 'Char-Master' briquets. Periodically turn the briquets over while they are cool.

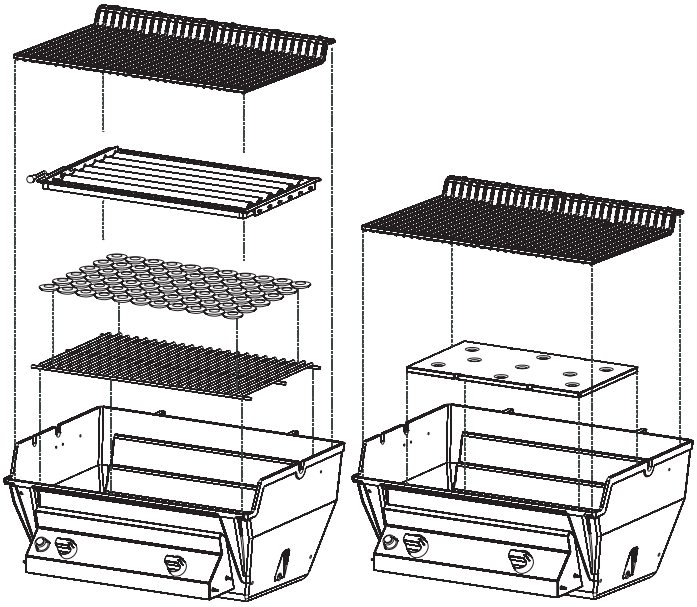

T3 & T3C MODELS **T3CF MODELS**

Figure 12

Lid Stop

Attach the lid stop assembly to the grill bottom as shown.
Figure 13.

Lid stop assembly hardware

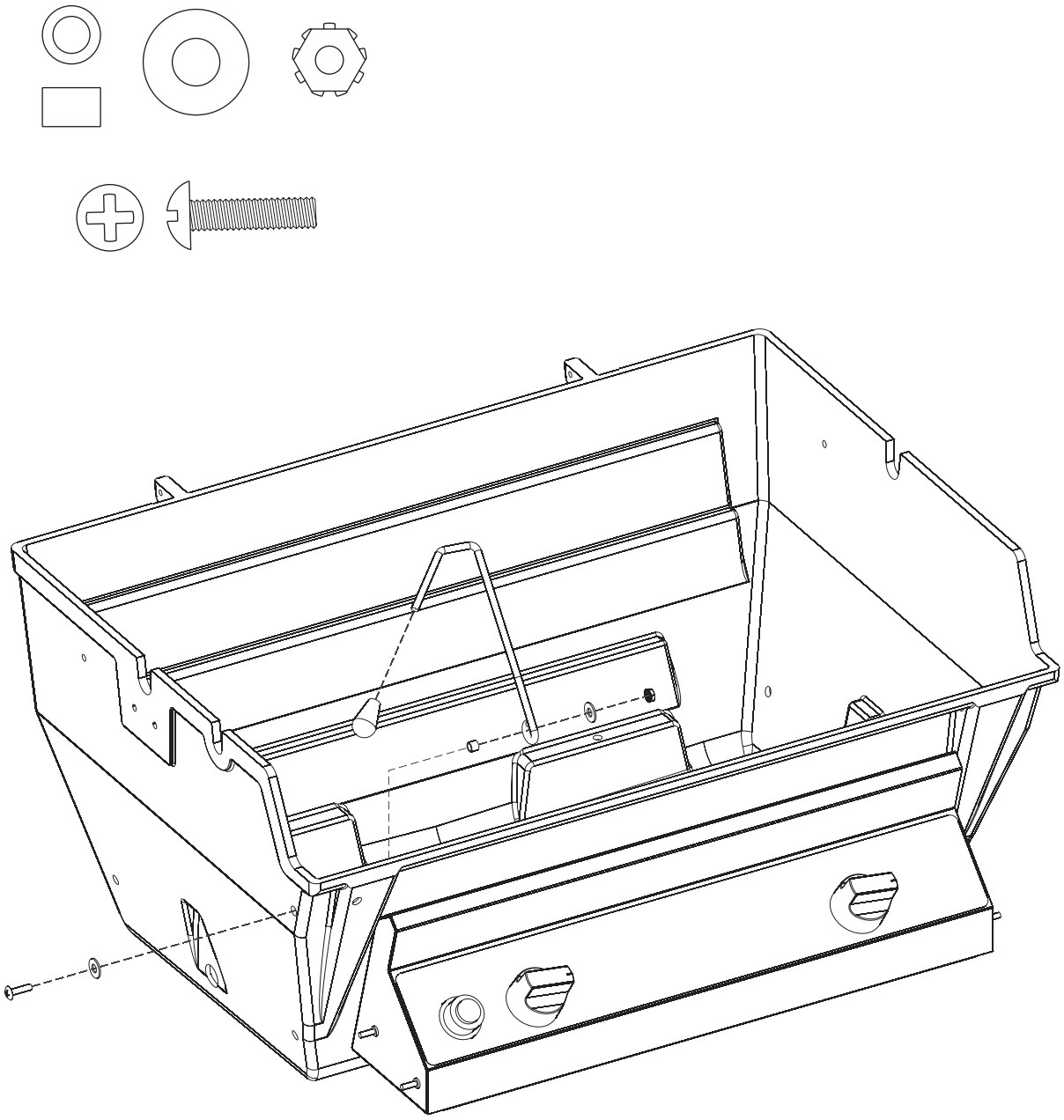

Figure 13

Grill Location

When choosing the ideal location for your Broilmaster Premium Gas Grill, remember this grill is designed for outdoor use ONLY.

You should never install or operate your grill in any building, garage, or other enclosed area.

For your safety, this grill should not be installed or operated under any combustible materials, such as carports, covered porches, awnings, or overhangs.

Never install or operate your grill in or on any recreational vehicle or boat.

CAUTION: The installation and operation of this grill at clearances less than specified below may lead to the possibility of fire, property damage, or personal injury.

A minimum clearance of sixteen (16") inches is required from the sides of the grill to any combustible material.

A minimum clearance of eighteen (18") inches is required from the back of the grill to any combustible material.

Some examples of combustible materials are a wall, a fence, patio furniture, or the wall of your home.

The area surrounding the grill should be clear to ensure proper ventilation. Do not obstruct the flow of combustion and ventilation air in any way. The ventilation openings on the propane cylinder enclosure must also remain free and clear of debris.

Portable grills should be level and positioned away from direct wind prior to each use.

WARNING: Do not install or operate this grill where gasoline or other flammable materials are used or stored. Failure to comply with this warning could result in explosion or fire causing property damage or personal injury.

Gas Type

Never use Liquid Propane (LP) gas with a grill designed for Natural gas, or Natural gas with a grill designed for Liquid Propane gas. The type gas required for your grill can be determined from the product identification label located on the grill's control panel. Questions regarding different types of gases should be directed to your gas supplier.

Cylinder Requirements

Your Broilmaster Premium Gas Grill requires a standard twenty (20) pound propane gas cylinder.

The maximum height allowable for a replacement cylinder is approximately twelve (12") inches (30.5 centimeters).

The propane gas cylinder used must be:

1. Constructed and marked in accordance with the specifications for LP gas cylinder of the U.S. Department of Transportation (D.O.T.) or the National Standard of Canada, CAN/CSA-B339, Cylinders, Spheres, and Tubes for Transportation of Dangerous Goods; and Commission as applicable.
2. Provided with a listed overfilling protection device (OPD).
3. Provided with a listed safety device having direct access with the vapor space of the cylinder and the cylinder supply system must be arranged for vapor removal.
4. Provided with a shutoff valve terminating in a valve outlet as specified in the Standard for Compressed Gas Cylinder Outlet and Inlet Connections, ANSICGA-V-1.
5. Provided with a plug to effectively seal off the cylinder outlet when the cylinder is being stored or transported.
6. Provided with a collar to protect the cylinder valve.

Caution: Do not use a propane gas cylinder which has a capacity greater than twenty (20) pounds with this grill and side burner.

Propane Cylinder Safety

Liquid Propane (LP) gas has a long history of safe use when the safety precautions provided in this manual are followed.

Failure to follow these safety precautions could result in a fire or explosion causing property damage or personal injury.

Propane gas cylinders should always be handled, stored, and transported with extreme caution in a secured upright position.

Never attempt to use or repair a propane gas cylinder that has been damaged. Never attempt to use or repair a cylinder with a faulty or damaged valve outlet. A cylinder that has been dropped, dented, or otherwise damaged must be replaced.

A propane gas cylinder should never be transported in the passenger area of a vehicle.

Keep cylinders out of direct sunlight and never apply any other source of direct heat to them.

When refilling your cylinder, always insist on a reputable, qualified gas dealer. Your propane gas cylinder is filled by weight, and should never exceed eighty (80%) percent of its weight limit. If the cylinder is not completely empty, the gas dealer must make necessary adjustments to ensure it is not overfilled. Never use an overfilled Propane gas cylinder.

Cylinder Storage

Your grill must be stored outdoors in a well ventilated area if the cylinder is attached to it.

Disconnected cylinders must have a threaded valve plug tightly installed and must not be stored in any building, garage, or other enclosed area.

Flammable materials (gasoline, grill covers, etc.) must not be stored in the cylinder enclosure.

Always store Propane cylinders in a secured upright position, out of the reach of children.

Connection Requirements

Caution: Never use Liquid Propane (LP) gas in a grill designed for Natural gas, or Natural gas in a grill designed for Liquid Propane gas. Questions regarding different types of gases should be directed to your local gas supplier.

Installation must conform to local codes or in the absence of local codes, with the National Fuel Gas Code, ANSI Z223.1/NFPA 54, Natural Gas and Propane Installation Code, CSA B149.1, or Propane Storage and Handling Code, B149.2.

Warning: Broilmaster Premium Gas Grills require Liquid Propane (LP) cylinders equipped with an Overfill Protection Device (OPD). An overfilled or improperly filled Propane cylinder can be dangerous.

Always use the pressure regulator and hose assembly supplied with your Propane gas grill.

Note: Not all valve and cylinder combinations are compatible. Check warning tag on valve and cylinder as well as external fitting threads.

All Broilmaster pressure regulators and hose assemblies require Propane cylinders with a Type 1 connection device as illustrated. Figure 14.

Figure 14

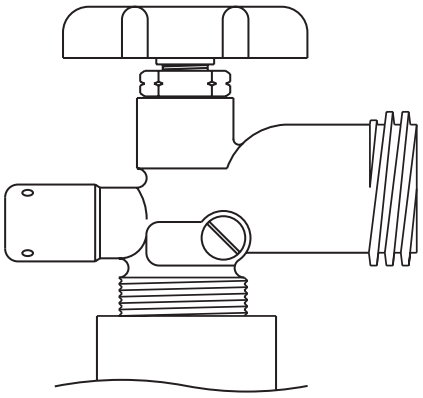

Pressure Regulator and Hose Assembly

The pressure regulator has an outlet pressure of not more than eleven (11") inches water column. It must be connected to the Propane gas cylinder's male valve outlet before the grill can be operated.

Caution: Operation of a Propane gas grill without the pressure regulator and hose assembly will cause gas leaks which could lead to fire or explosion, resulting in property damage or personal injury.

The pressure regulator's fitting must remain clean and free of nicks and scratches. A dirty, nicked or scratched fitting can cause a gas leak, resulting in an explosion or fire. Use only genuine Broilmaster replacement parts unless otherwise specified by the manufacturer.

Connecting to Propane Gas / Cylinder Retention Means

Position the cylinder in the opening in the bottom of the cart and secure with the cylinder retaining bracket. Figure 15.

Attach the pressure regulator to the Propane gas cylinder's valve using the plastic handwheel. Tighten in a clockwise motion to achieve a gas tight seal. See Figure 16.

Caution: Do not use a wrench or any other tool to tighten. Use of a wrench or other tool will damage the plastic handwheel.

To disconnect the Propane gas cylinder, turn OFF the cylinder's valve and the grill's control valve. Remove the regulator by turning the plastic handwheel counterclockwise.

When not in use, the cylinder's valve must be closed.

Attention: Propane gas cylinders that are acceptable for use with this grill must comply with "**Cylinder Requirements**" section (Page 13) and "**Connection Requirements**" section (Page 14.)

Caution: Assure hose does not touch the casting or mounting components.

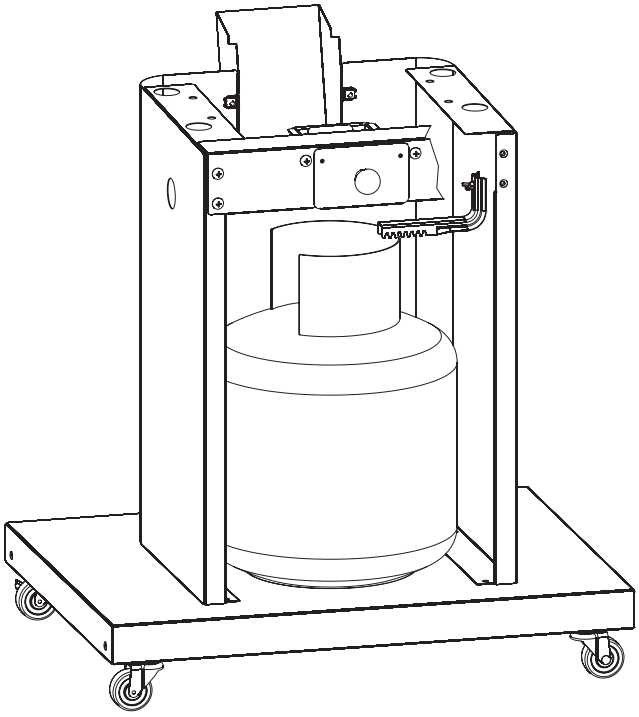

Figure 15

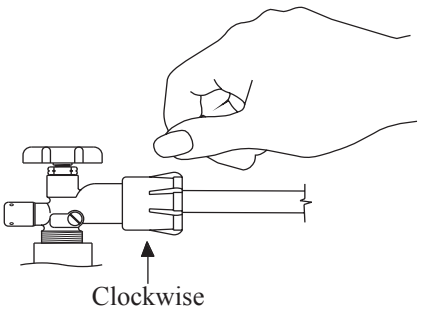

Figure 16

Gas Conversion to Natural Gas

1. Remove cooking grids, flavor screen or, briquets and briquet rack from grill.
2. Remove burners and burner shields from grill (one (1) 1/4-20 x 3/4 phillips screw for each burner). See Figure 17.

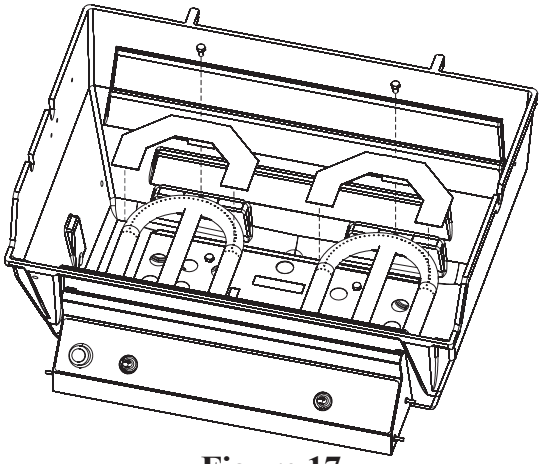

Figure 17

3. Remove LP burner orifice marked 1.25mm from each orifice fitting. See Figure 18.

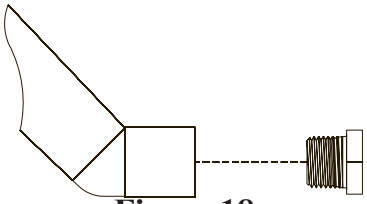

Figure 18

4. Install natural gas burner orifice marked 49 into each orifice fitting. Apply pipe compound to threads on orifices prior to installation.
5. Place burners into grill and insert burner tubes over orifice fittings. Secure each burner with one (1) 1/4-20 x 3/4 phillips screw from Step 2.
6. Grasp valve knobs and remove from valves.
7. The low input adjustment screws are located inside the two valve stems. Use a small screwdriver to turn each adjustment screw clockwise 1/4 turn (90 degrees). When valves are in the "OFF" position, the slot in the adjustment screw should be vertical. See Figure 19.

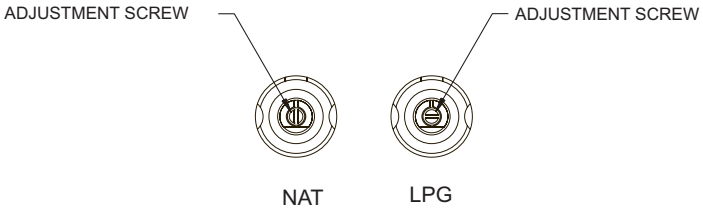

Figure 19

8. Remove the hose and regulator from the gas connection on grill with adjustable wrench.
9. Connect the grill to the natural gas supply. **Attention:** Before lighting your grill check all gas connections including the adjustment screws in valve stems for gas leaks with a soapy water mixture. **Caution:** Do not use the grill if a gas leak is detected until gas leak is corrected. If a gas leak can not be stopped, do not use grill. You must contact a qualified repair person.
10. Push valve knobs onto valves.
11. Apply the completed conversion label adjacent to the rating plate label on the grill.
12. The natural gas inlet pressure at the grill is to be set at 7.0" of inlet pressure.
13. Ignite burners on grill and observe flame pattern. If flame is yellow in color or flame is lifting off burner, the air shutter on burners will require adjustment.
14. Beneath the control panel you can access the air shutters which are located on the end of the burner tubes.
15. Loosen phillips screw at air shutter, open air shutter for a yellow flame or close air shutter for a lifting flame. Tighten phillips screw at air shutter.
16. Ignite burners on grill to verify burner flame characteristics.
17. Replace flavor screen or briquet rack and briquets and cooking grids.

Installation must conform to local codes or in the absence of local codes, with the National Fuel Gas Code, ANSI Z223.1/NFPA 54, Natural Gas and Propane Installation Code, CSA B149.1, or Propane Storage and Handling Code, B149.2.

Caution: The grill and its individual shutoff valve must be disconnected from the gas supply piping system during any system pressure testing at test pressures in excess of 1/2 PSIG.

Caution: The grill must be isolated from the gas supply piping system by closing its individual manual shutoff valve during any pressure testing of the gas supply piping system at test pressures equal to or less than 1/2 PSIG.

Grill Location

When choosing the ideal location for your Broilmaster Premium Gas Grill, remember this grill is designed for outdoor use ONLY.

You should never install or operate your grill in any building, garage, or other enclosed area.

For your safety, this grill should not be installed or operated under any combustible materials, such as carports, covered porches, awnings, or overhangs.

Never install or operate your grill in or on any recreational vehicle or boat.

CAUTION: The installation and operation of this grill at clearances less than specified below may lead to the possibility of fire, property damage, or personal injury.

A minimum clearance of sixteen (16") inches is required from the sides of the grill to any combustible material.

A minimum clearance of eighteen (18") inches is required from the back of the grill to any combustible material.

Some examples of combustible materials are a wall, a fence, patio furniture, or the wall of your home.

The area surrounding the grill should be clear to ensure proper ventilation. Do not obstruct the flow of combustion and ventilation air in any way. The ventilation openings on the propane cylinder enclosure must also remain free and clear of debris.

Portable grills should be level and positioned away from direct wind prior to each use.

WARNING: Do not install or operate this grill where gasoline or other flammable materials are used or stored. Failure to comply with this warning could result in explosion or fire causing property damage or personal injury.

Gas Type

The type gas required for your grill can be determined from the product identification label located on the grill's control panel. Questions regarding different types of gases should be directed to your local gas supplier.

Caution: Never use Liquid Propane (LP) gas in a grill designed for Natural gas, or Natural gas in a grill designed for Liquid Propane gas. Questions regarding different types of gases should be directed to your local gas company.

Connection Requirements

Broilmaster grills are not equipped with pressure regulators. Your gas grill operates at a manifold pressure of seven (7") inches water column.

Connect cart mounted Natural gas grills to a pre-installed gas supply line using the twelve (12') foot flexible hose and quick disconnect kit which can be purchased from your local dealer.

Checking for Gas Leaks

Check for gas leaks every time you connect your Broilmaster propane gas grill to a Propane gas cylinder, when a connected cylinder has not been used recently, or when either a natural or propane grill is being used for the first time.

Caution: Do not use an open flame when checking for leaks. Checking for leaks with an open flame may lead to a fire or explosion, resulting in property damage or personal injury.

To check for gas leaks:

1. Use dish washing liquid and a little water to make a soapy solution.
2. Turn OFF the knob on the control panel.
3. Turn ON the gas at the supply or cylinder. A hissing sound indicates a leak. Turn OFF the gas and repair the leak.
4. Apply the soapy water solution to all gas connections.
5. Look for bubbles. Bubbles indicate a leak.
6. If there are bubbles turn OFF the gas and repair the leak.
7. Turn the gas back ON and repeat the above procedures until all leaks are repaired.

Air Shutter Adjustment

The burner (venturi) tube air shutter is preset at the factory so that after five minutes the burner flames are blue with well defined cones. If, after five minutes the flame is yellow, or there is a gap between the burner and the flame, adjust the burner (venturi) tube air shutter as follows:

1. Turn gas OFF and let the burner cool.
2. Beneath the control panel you can access the air shutter(s) which are located on the end of the burner tubes.
3. Loosen shutter set screw
4. Close the air shutter to the minimum opening.
5. Light the burner, wait five minutes and then carefully open the air shutter until the flame is blue and well defined.
6. Retighten the set screw.

Operating Instructions

Before each use, inspect all hoses. If it is evident there is excessive abrasion or wear, or the hose is cut, it must be replaced prior to using your Broilmaster grill. Call your local Broilmaster dealer for a replacement.

Using the Ignitor

Caution: If a burner fails to light after 5 seconds, turn the burner OFF for 5 minutes, to allow the gas to clear, then try again.

Note: Each burner must be lit individually.

1. Turn knob on the grill CLOCKWISE to the OFF position.
2. Turn ON gas at the source.
3. With the grill lid open, push and turn the burner control knob COUNTERCLOCKWISE to Hi.
4. Push and hold the ignitor button until the burner lights (approximately 5 seconds).
5. If a burner does not light, turn OFF all gas and refer to the Troubleshooting section of this manual.
6. Repeat steps 3 through 5 for other burner.

Using Matches

Caution: If a burner fails to light after 5 seconds, turn the burner OFF for 5 minutes, to allow the gas to clear, then try again.

Note: Each burner must be lit individually.

1. Turn knob on the grill CLOCKWISE to the OFF position.
2. Turn ON gas at the source.
3. Open the grill lid.
4. Insert a burning long wooden match through the lighter hole on either side of the grill. See Figure 20.
5. Turn the burner control knob COUNTERCLOCKWISE to HI.
6. If a burner does not light, turn OFF all gas and refer to the Troubleshooting section of this manual.
7. Repeat steps 3 through 6 for other burner.

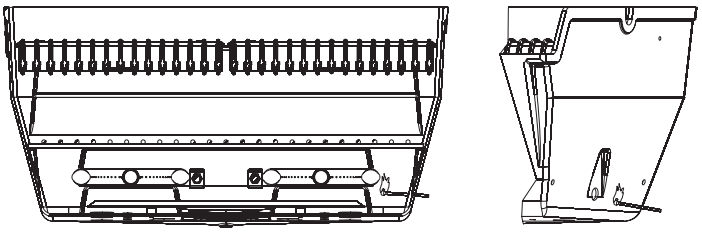

Figure 20

Before Cooking

Before cooking on a grill for the first time, it should be operated to burn off any oil residue from the manufacturing process.

1. Raise the grill lid.
2. Light grill burners.
3. Burn on HI for ten minutes.
4. Close the lid and burn on HI for an additional ten minutes.
5. Turn OFF gas. The grill is now ready for use.

Preheating

Before cooking on a gas grill, allow the grill to preheat on HI for 5 minutes with the lid closed.
This uses very little fuel and provides better flavor.

Cooking

Broilmaster is happy to provide a cookbook with each of its grills. The cookbook contains helpful cooking tips and instructions as well as great tasting recipes for preparing many delicious foods on your grill.

Electrical Accessories

If an electrical accessory (e.g. rotisserie) is used on your grill, the accessory must be electrically grounded in accordance with local codes or, in the absence of local codes, with the National Electric Code, ANSI/NFPA 70. In Canada, the electrical accessory must be electrically grounded in accordance with the applicable section of the current Canadian Electrical Code, CSA C22.1.

Any electrical accessory should be equipped with a three-prong (grounding) plug, and plugged into a properly grounded three-prong receptacle or wall outlet. Do not cut or remove the grounding prong from the plug.

If an extension cord is required, use only a three-prong cord and plug into a properly grounded receptacle as described above.

Do not expose an electrical accessory to water. Avoid using any electrical accessory in wet weather as it may present a shock hazard.

Keep any electrical cord and fuel supply hose away from all heated surfaces.

Cleaning the Grill

Caution: To prevent injury, use care when cleaning a hot grill.

Note: Do not use a commercial cleaner on the cooking grids. Do not brush grids while they are hot. Do not scrape grids. This can damage the porcelain coating and void the warranty on the cooking grids.

For baked on residue use a BRASS (NOT STEEL) brush on the cooking grid and other components.

Burn Off

This process is much like that used in self-cleaning ovens and is most efficient when completed after each use of the grill.

Caution: Do not open the grill during the burn off process. Opening the grill during the burn off process may cause a sudden grease fire flare up that could burn your face and arms. Wait until the grill has cooled before opening.

1. Turn gas knob to HI. Close lid and allow the grill to burn for ten minutes, or until no smoke is present. Do not allow the grill to burn for more than 30 minutes.
2. Turn gas knob and supply to OFF and allow the grill to cool.
3. Wipe COOL grill with a damp cloth to remove soot.

Grill Bottom

Periodically remove cooking grids and Char-Master Briquets or flavor screen to clean the interior of the grill. Scrape off baked on residue with a putty knife or brass brush and rinse with water. Clean the bottom air holes with a small knife.

Burner Maintenance

Visually inspect the burner flames with each use. Five minutes after lighting, the flames should be blue and have well defined cones. See Figure 21. See the troubleshooting section if the flames are yellow or lift off the burner.

Stainless steel burners often turn reddish brown after use. This does not effect the performance of the grill. When cleaning the interior of the grill, remove the burners and clean with a brass brush. Wash with water and a mild detergent.

Grease Tray

Empty periodically. Replacement tray liners can be purchased at most supermarkets where disposable aluminum baking pans are displayed.

Burner (Venturi) Tubes

The burner (venturi) tubes allow air and gas to mix prior to burning, thus ensuring an efficient flame. Spiders or other small insects may build webs or nests inside the tubes obstructing air flow. Fire, or flashback, can occur, in and/or around obstructed burner (venturi) tubes and can cause damage to components beneath the grill or an unsafe condition. To reduce risk, inspections and cleaning should be performed at least twice monthly when spiders are active. If the grill has been unused for an extended period of time inspect the tubes before using the grill.

Clean burner (venturi) tubes as follows:

1. Remove the cooking grids and briquette rack or flavor screen.
2. Remove the burner from the grill.
3. Use a small flexible brush to remove any debris from the burner (venturi) tube.
4. Flush with water.
5. Allow the burner (venturi) tube to dry before reinstalling.
6. Reinstall the burner, briquet rack and briquets or flavor screen, and cooking grids.

Exterior

Clean regularly with a solution of mild detergent and hot water. Touch-up paint is available from your dealer. Broil-master protective covers are recommended. Stainless steel components can be easily cleaned with a spray-on stainless steel cleaner found in most hardware stores.

Char-Master Briquettes

If the briquettes did not come clean during burn off, after cooling turn them over. The residue will burn off during warm-up for the next use.

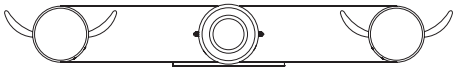

Correct Flame Pattern

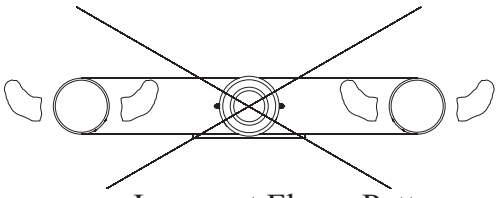

Incorrect Flame Pattern

Figure 21

Troubleshooting

Although the manufacturer has attempted to ensure that your grill will operate properly and satisfactorily, sometimes problems do arise. The following troubleshooting guide lists several possible problems and their probable cause and solution.

Problem	Cause	Solution
Burner will not light.	Gas injector not inserted in venturi tube.	Realign/engage gas injector with the venturi tube.
	Clogged gas injector.	Remove gas injector from gas control assembly and clean.
	Obstruction in gas line.	For propane models, ensure gas valve on cylinder is OFF. Remove flexible hose and blow out any debris.
	Spider webs in venturi tubes.	Clean venturi tubes. See Maintenance Section.
	Misalignment of collector box and burner.	Position electrode properly. Clean collector box.
	Out of gas.	Refill LP gas cylinder. If natural model, turn on gas at source.
	Dead battery.	Replace with AA Alkaline battery.
Inadequate grill temperature.	Poor combustion.	Adjust air shutter.
	Misalignment of venturi tube and gas injector.	Realign/engage gas injector with the venturi tube.
	Inadequate gas pressure.	Contact gas supplier for assistance.
	Incorrect orifice/valve setting.	Refer to gas conversion instructions in this manual.
Flames off the burner.	Cold grill.	Preheat grill at least 5 minutes on HI with the grill lid closed.
	Misalignment of burner tube and gas injector.	Realign/engage gas injector with the burner tube.
	Poor combustion.	Adjust air shutter.
	Extreme wind.	Turn or shield grill.
Yellow flames.	Air shutter improperly set.	Open air shutter.
	Spider webs in venturi tubes.	Clean venturi tubes. See Maintenance Section.
	Seasoning salts on burner.	Clean by washing burner with mild detergent.
	Oil film on burner.	Allow burner to operate on HI for 10-15 minutes.

BROILMASTER®
PREMIUM GAS GRILLS

The Most Durable Grill Known
To Man

WARRANTY TERMS

Lifetime	• Aluminum Grill Housing (except paint) • Porcelain Coated Cast Iron Cooking Grids • Cast Stainless Steel Cooking Grids (Damaged caused by dropping, scraping, or abrasive cleaning voids the warranty for cooking grids) • Select Stainless Steel Components - Cart, Mounting, Bowtie Burner, T3 Burner, Side Burner, Side Burner Housing, and Warming Rack.
5 Years	• Painted Electro-Galvanized Steel Components • Stainless Steel Smoker Shutter
2 Years	• Porcelain Coated Steel Briquet Racks • Chrome-Plated Warming Rack • Stainless Steel Flavor Screen and Heat Shield
1 Year	• Valves, knobs, ignitors, labels, hoses, fittings and all other parts and accessories - including those made from stainless steel and painted steel - unless specified above. • Paint on aluminum grill head

What Is Covered And For How Long

From the date this Broilmaster Premium Gas Grill is first purchased, we will make available at our factory a free replacement for any defective part covered by this warranty on the following basis. Proof of purchase required. Warranty applies to original owner and is not transferable.

What Is Not Covered

- Removal and reinstallation cost.
- Labor for replacement or repairs.
- The costs of a service call to diagnose a problem.
- Transportation and shipping cost.
- Surface corrosion.
- Grills and finishes damaged by abrasive cleaning, improper installation, improper storage, accident, misuse, abuse, alteration, commercial use, and unusually harsh environmental conditions. Harsh conditions could include, but are not limited to: continual seawater spray, direct contact with pool chemicals or lawn chemicals, direct contact with corrosive materials.

This warranty does not imply or assume any responsibility for consequential damages that might result from misuse, or improper installation of this cooking appliance. This warranty does not cover claims that do not involve defective workmanship or materials.
A bill of sale, cancelled check, or payment record should be kept to verify purchase date and establish warranty period. **Note: Empire Comfort Systems is committed to continuous product improvement. Materials and specifications are subject to change without notice.**

NOTES

BROILMASTER®
PREMIUM GAS GRILLS

The Most Durable Grill Known To Man

BROILMASTER®
is registered trademark of
Empire Comfort Systems, Inc.
918 Freeburg Ave.
Belleville, Illinois 62220

Visit our web site at www.broilmaster.com