This Owner's Manual is provided and hosted by Appliance Factory Parts.

Appliance Factory Parts
Experts in BBQ, Humidifier, & Appliance Parts
1-800-955-7075

BROAN 721
Owner's Manual

Shop genuine replacement parts for BROAN 721

Find Your BROAN HVAC Parts - Select From 1309 Models

-------- Manual continues below --------

BROAN®

SPECIFICATION SHEET

MODELS 710, 714, 721 & 722 DESIGNER SERIES FAN/LIGHT/NIGHT LIGHTS

Styled from the highest quality components to add a dramatic touch to any bathroom

FEATURES

GRILLE:

- Corrosion-resistant, anodized aluminum grille (Polished brass finish Model 710, Polished chrome finish Model 714)
- Solid oak frame (Models 721 and 722)
- Low profile
- Unique louver pattern - conceals interior
- Spring-mounted, moonstone glass light lens
- 100 Watt lamp capacity (bulb not included)
- Convenient 7 Watt night light (bulb not included)

BLOWER:

- Plug-in, permanently lubricated motor
- Centrifugal blower wheel

HOUSING:

- Rugged, 26-gage galvanized steel construction
- Adjustable mounting brackets span up to 24"
- Tapered, polymeric duct fitting with built-in backdraft damper for easy, positive duct connection and no metallic clatter

NOTE: For installation in ceilings up to 12/12 pitch.

U.L. Listed for use in insulated ceilings (Type I.C.)

U.L. Listed for use over bathtubs and showers when connected to a GFCI protected branch circuit (oak frames not recommended).

CONTROLS DESIGNED FOR USE WITH THESE PRODUCTS (purchase separately):

Model 65V (Ivory), 65W (White): Fan/Light/Night Light Control with brass finish metal wall plate.
Model 66V (Ivory), 66W (White): Fan/Light/Night Light Control with plastic wall plate.
Model 67V (Ivory), 67W (White): Fan/Light/Night Light Control with chrome finish metal wall plate.

TYPICAL SPECIFICATION

Fan/Light/Night Light unit shall be Broan Designer Series Model 710 (714) (721) (722).

Unit shall have galvanized steel housing with adjustable mounting brackets. It shall be ducted to a roof or wall cap.

Blower assembly shall be removable and have a centrifugal blower wheel and permanently lubricated motor.

Ventilator to have 100 Watt maximum, incandescent lamp with 7 Watt night light and glass lens. Grille shall be corrosion resistant [with solid oak frame (Models 721, 722)].

Air delivery shall be no less than 100 CFM and sound level no greater than 3.5 Sones. Air and sound ratings shall be certified by HVI.

Unit shall be U.L.Listed for use over bathtubs and showers when connected to a GFCI protected branch circuit.

Unit shall be U.L. Listed for use in insulated ceilings (Type I.C.)

HVI-2100 CERTIFIED RATINGS comply with new testing technologies and procedures prescribed by the Home Ventilating Institute, for off-the-shelf products, as they are available to consumers. Product performance is rated at 0.1 in. static pressure, based on tests conducted in AMCA's state-of-the-art test laboratory. Sones are a measure of humanly-perceived loudness, based on laboratory measurements.

Broan-NuTone LLC, 926 West State Street, Hartford, WI 53027 (1-800-637-1453)

REFERENCE	QTY.	REMARKS	Project	
			Location	
			Architect	
			Engineer	
			Contractor	
			Submitted by	Date

PERFORMANCE RATINGS — DESIGNER SERIES FAN/LIGHT/NIGHT LIGHTS

VOLTS	AMPS*	SONES	CFM	DUCT
120	2.2	3.5	100	4" Round

*Total Connected Load

HVI-2100 CERTIFIED RATINGS comply with new testing technologies and procedures prescribed by the Home Ventilating Institute, for off-the-shelf products, as they are available to consumers. Product performance is rated at 0.1 in. static pressure, based on tests conducted in AMCA's state-of-the-art test laboratory. Sones are a measure of humanly-perceived loudness, based on laboratory measurements.

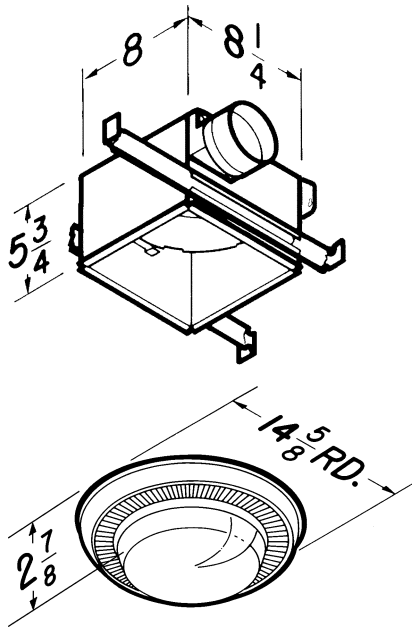

MODEL 710 & 714

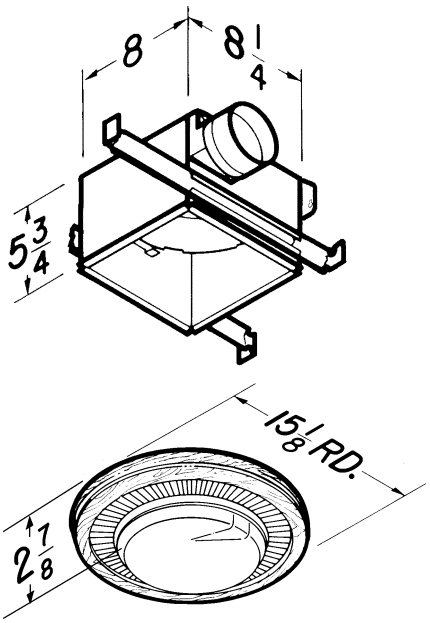

MODEL 721

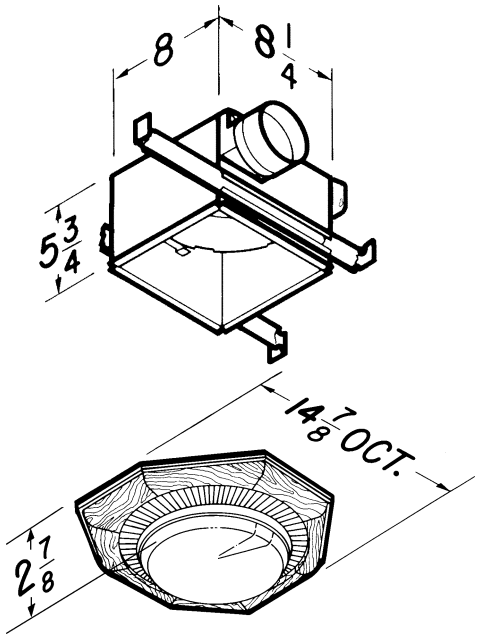

MODEL 722

Broan-NuTone LLC, 926 West State Street, Hartford, WI 53027 (1-800-637-1453)