BROAN®

FRESH AIR SYSTEMS

INSTALLATION INSTRUCTIONS MANUAL

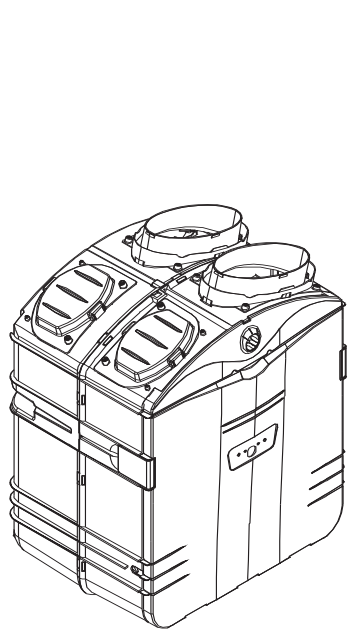

HEPA Filtration* GSFH1K

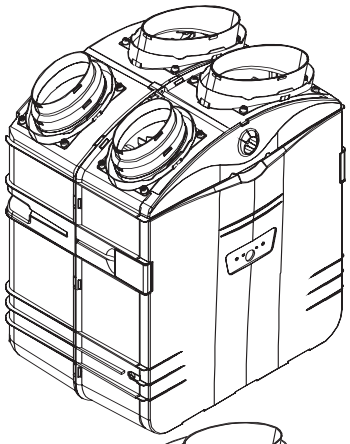

HEPA Filtration and Fresh Air Ventilation* GSVH1K

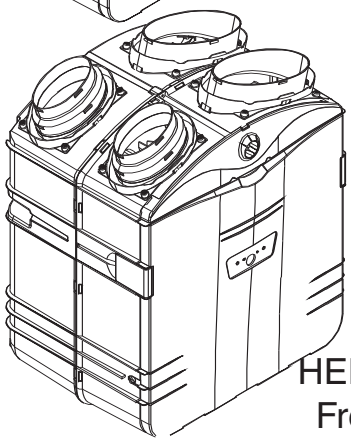

HEPA Filtration, Fresh Air and Energy Recovery Ventilation* GSEH3K

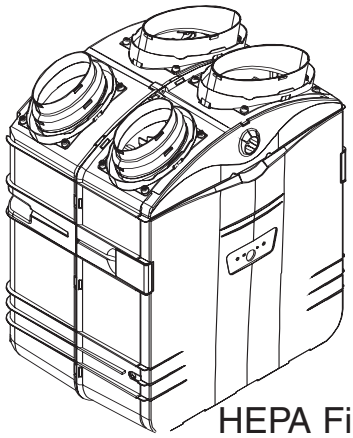

HEPA Filtration, Fresh Air and Heat Recovery Ventilation* GSHH3K

VB0061

*Patents pending

RESIDENTIAL USE ONLY.

READ AND SAVE THESE INSTRUCTIONS

INSTALLER: LEAVE THIS MANUAL WITH CONSUMER.

Broan-NuTone LLC; Hartford, Wisconsin www.broan.com 800-558-1711

REGISTER YOUR PRODUCT ON LINE AT: www.broan.com/register

For additional information - visit www.Broan.com

04326 rev. 7

99043105

ABOUT THIS MANUAL

Congratulation! Your purchase of this whole-house HEPA filtration, with optional ventilation will allow you and your family to enjoy clean and healthy air throughout your home for years to come!
Please read this manual thoroughly.
Several models are described in this publication. Some details of your unit may be slightly different than the ones shown, as the illustration are typical ones.
Please take note that this manual uses the following symbols to emphasize particular information:

⚠ WARNING

Identifies an instruction which, if not followed, might cause serious personal injuries including possibility of death.

CAUTION

Denotes an instruction which, if not followed, may severely damage the unit and/or its components.

NOTE: Indicates supplementary information needed to fully complete an instruction.

We welcome any suggestions you may have concerning this manual and/or the product, or ways to better serve you. Please forward all correspondence at the address below:

Broan-NuTone LLC
Indoor Air Quality Marketing
926 W. State St.,
Hartford, WI 53027
1-800-558-1711

ABOUT THESE UNITS

⚠ WARNING

TO REDUCE THE RISK OF FIRE, ELECTRIC SHOCK, OR INJURY TO PERSON(S) OBSERVE THE FOLLOWING:

1. **This unit is intented for residential installation only.**
2. **Installation must be done in accordance with all applicable codes and standards, including fire-rated construction codes and standards.**
3. **This unit is not designed to provide combustion and/or dilution air for fuel-burning appliances.**
4. **Do not install in a cooking area or connect directly to an appliance.**
5. **Before replacing filters, servicing or cleaning unit, disconnect the power cord from electrical outlet.**
6. **When cutting or drilling into wall or ceiling, do not damage electrical wiring or other hidden utilities.**
7. **Do not use this unit with any solid-state speed control device other than wall controls ACCGSC1 or 40425, provided with the unit.**
8. **This unit must be grounded. The power supply cord has a 3-prong grounding plug for your personal safety. It must be plugged into a mating 3-prong grounding receptacle, grounded in accordance with the national electrical code and local codes and ordinances. Do not remove the ground prong. Do not use an extension cord.**
9. **This unit must be installed in a weatherized location out of direct sunlight and protected from the elements.**
10. **Use this unit only in the manner intended by the manufacturer. If you have questions, contact the manufacturer at the address or telephone number listed in this document.**
11. **When performing installation, servicing or cleaning the unit, it is recommended to wear safety glasses and gloves.**
12. **When the federal, provincial or state legislation comprises more restrictive installation and/or certification requirements, the aforementioned requirements prevail on those of this document and the installer agrees to conform to these at his own expenses.**

CAUTION

1. **For general filtration and ventilation use only. Do not use to exhaust hazardous or explosive materials and vapors.**
2. **Intended for residential installation only in accordance with the requirements of NFPA 90B.**
3. **For GSVH1K, GSHH3K and GSEH3K units only: Be sure to duct air outside. - Do not intake / exhaust air into spaces with in walls or ceiling or into attics, crawl spaces, or garage.**
4. **Do not run any air ducts directly above or closer than 2 ft (0.61 m) to any furnace or its supply plenum, boiler, or other heat producing appliance. If a duct has to be connected to the furnace return plenum, it must be connected not closer than 2 ft (0.61 m) from this plenum connection to the furnace.**
5. **The ductwork is intended to be installed in compliance with all local and national codes that are applicable.**
6. **To avoid prematurate clogged filters, turn OFF the unit during construction or renovation.**
7. **Please read the unit specification label on the product for further information and requirements.**
8. **During snow storm, turn GSVH1K unit OFF to avoid water build-up in the unit. For GSEH3K and GSHH3K, operate these units in recirculation mode.**
9. **At least once in a year, the unit mechanical and electronic parts should be inspected by qualified service personnel.**

NOTE: The energy recovery ventilator GSEH3K is designed to assist in the management of humidity introduced into the home. In extreme humidity conditions, the use of additional dehumidification may be desirable. Quickly remove all excess moisture and keep areas clean.

TABLE OF CONTENTS

1. Before Starting 4
   - 1.1 *Inspect the Content of the Box* 4
2. Technical Data 4-6
   - 2.1 *Dimensions and Air Distribution Ports* 5
   - 2.2 *Ventilation Performances* 5-6
   - 2.3 *Mounting and Servicing Considerations* 6
3. Recovery Needs According to Geographical Location 7
4. Planning the Installation 7-8
   - 4.1 *Planning of the ductwork* 8
5. Typical Installations 8-13
   - 5.1 *GSFH1K Unit Installations* 9
   - 5.2 *GSVH1K, GSHH3K and GSEH3K Units Installations* 10
   - 5.3 *Stand Alone Installation* 11-12
   - 5.4 *Central Draw Point Installation* 12
   - 5.5 *Return-to-Return Installation* 13
6. Install the Unit 14-25
   - 6.1 *Tools and Materials* 14
   - 6.2 *Mount the Ports on the Unit* 14
   - 6.3 *Installation Using Isolator Pads* 14
   - 6.4 *For Suspended Applications* 14-16
   - 6.5 *Installing 8“ Ducts and Registers* 16-18
   - 6.6 *Installing Insulated Flexible Ducts to Tandem® Transition* 19
   - 6.7 *Installing AirDuo™ Exterior Hood* 19-21
   - 6.8 *Installing Two exterior Hoods* 21-22
   - 6.9 *Connection to the 5” to 6” Oval Ports of the Unit* 23
   - 6.10 *Connecting the Drain* 24
   - 6.11 *Low Temperature Applications Below Freezing (32°F or 0°C)* 24-25
7. Controls 26-31
   - 7.1 *Main Switch* 26
   - 7.2 *Wall Controllers* 26
   - 7.3 *Installation of the ACCGSC1 Wall Controller* 27
   - 7.4 *Installation of the 40425 Wall Controller* 28
   - 7.5 *Wall Controllers Connection to the Unit* 29
   - 7.6 *Operating ACCGSC1 Controller* 30
   - 7.7 *Operating 40425 Controller* 30-31
8. Balancing Procedure 32
   - 8.1 *What You Need to Balance the Unit* 32
   - 8.2 *Preliminary stages for Balancing the Unit* 32
   - 8.3 *Installation of Flow Collar* 32
   - 8.4 *Balancing Procedure* 32
9. Maintenance 33-35
   - 9.1 *Semi-Annual Maintenance (Essential)* 33-34
   - 9.2 *Annual Maintenance* 35
   - 9.3 *Optional Alpine/pine Filter* 35
10. Troubleshooting 35
11. Warranty 36

1. BEFORE STARTING

1.1 Inspect the Contents of the Box

⚠ WARNING

To avoid risk of suffocation, discard the plastic bag wrapping the unit.

- Inspect the exterior of the unit for shipping damage. Ensure there is no damage to the door, door latches, main switch, etc.

CAUTION

Remove the cardboard strip inside the unit (if applicable).

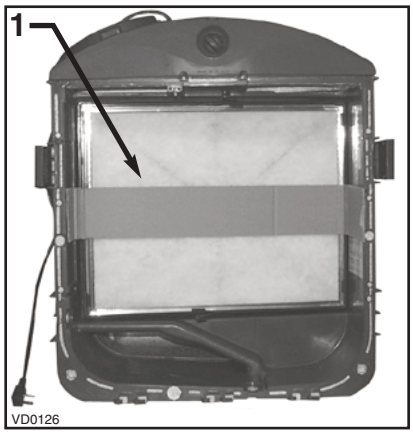

1) Cardboard strip

- Inspect the interior of the unit for damage. Ensure the blower assembly, heat recovery core (model GSHH3K), energy recovery core (model GSEH3K), insulation, dampers (models GSVH1K, GSHH3K and GSEH3K), prefilter, HEPA filter, etc. are all intact.
- If the unit was damaged during shipping, contact your local distributor, or Broan-NuTone at 1-800-558-1711.

2. TECHNICAL DATA

Models	GSFH1K HEPA Filtration	GSVH1K HEPA Filtration & Fresh Air Ventilation	GSHH3K HEPA Filtration, Fresh Air & Heat Recovery Ventilation	GSEH3K HEPA Filtration, Fresh Air & Energy Recovery Ventilation
Weight	34 lb (15.4 kg)	36 lb (16.3 kg)	40 lb (18.2 kg)	40 lb (18.2 kg)
Oval shaped duct collars for non-insulated ducts to inside	fits two 8” round ducts			
Oval shaped duct collars for insulated ducts to outside	N/A	fits two 5” or 6” round ducts		
Installation: Suspended or rest on a shelf or floor:	Chains, springs and hooks (provided with the unit) or 4 pads (provided with the unit)			
Electrical Supply	120 Volts AC, 60 Hz			
Power Consum. (Boost) Power Consum. (Normal)	170 Watts 132 Watts	224 Watts 152 Watts	229 Watts 170 Watts	224 Watts 170 Watts

NOTE: Due to our ongoing commitment to product quality and innovation, all specifications are subjected to change without notice.

2. TECHNICAL DATA (CONT'D)

2.1 Dimensions and Air Distribution Ports

HEPA FILTRATION UNIT, MODEL GSFH1K

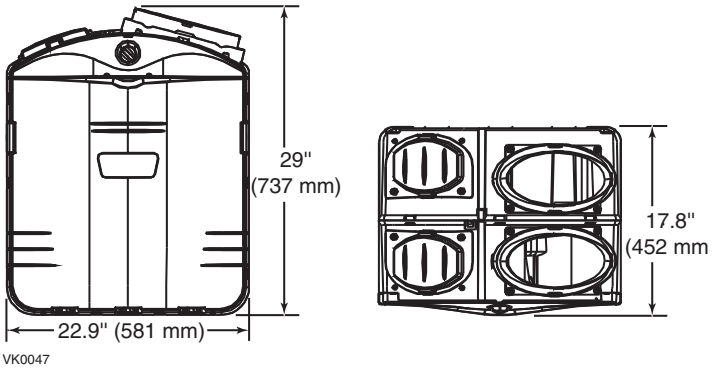

FRONT VIEW TOP VIEW

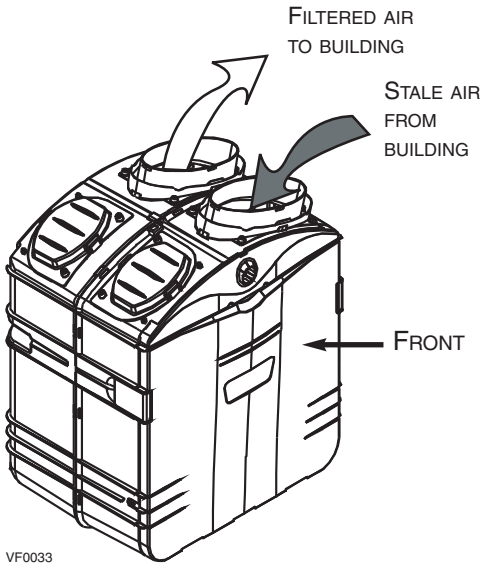

HEPA FILTRATION UNIT AND FRESH AIR VENTILATION, MODEL GSVH1K
HEPA FILTRATION, FRESH AIR AND HEAT RECOVERY VENTILATION, MODEL GSHH3K
HEPA FILTRATION, FRESH AIR AND ENERGY RECOVERY VENTILATION, MODEL GSEH3K

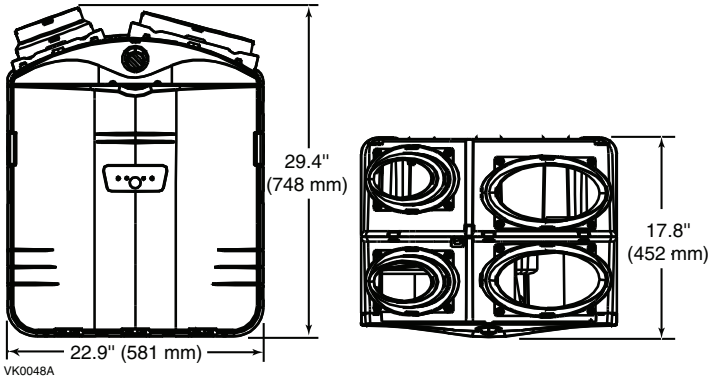

FRONT VIEW TOP VIEW

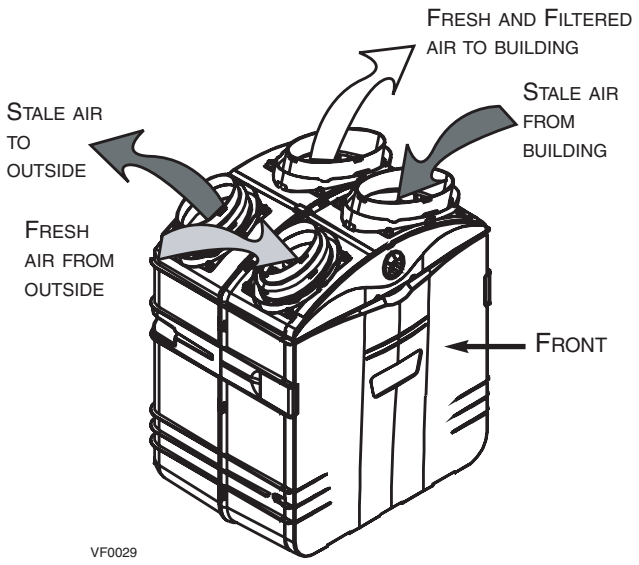

2.2 Ventilation Performances

2.2.1 GSVH1K Ventilation Performances

EXT. STATIC PRESSURE		NET VENTILATION AIRFLOW		GROSS AIR FLOW SUPPLY		EXHAUST		FILTERED		POWER
Pa	in.w.g.	L/s	cfm	L/s	cfm	L/s	cfm	L/s	cfm	Watts
50	0.2	52	110	56	118	54	115	132	279	231
100	0.4	49	104	52	111	49	104	121	257	224

NOTE: all tests performed at high speed.

2. TECHNICAL DATA (CONT'D)

2.2 VENTILATION PERFORMANCES (CONT'D)

2.2.2 GSHH3K VENTILATION PERFORMANCES

EXT. STATIC PRESSURE		NET VENTILATION AIRFLOW		GROSS AIR FLOW SUPPLY		EXHAUST		FILTERED		POWER
Pa	in.w.g.	L/s	cfm	L/s	cfm	L/s	cfm	L/s	cfm	Watts
50	0.2	52	110	58	124	57	121	131	277	237
100	0.4	49	103	55	116	51	108	119	252	229

2.2.3 GSEH3K VENTILATION PERFORMANCES

EXT. STATIC PRESSURE		NET VENTILATION AIRFLOW		GROSS AIR FLOW SUPPLY		EXHAUST		FILTERED		POWER
Pa	in.w.g.	L/s	cfm	L/s	cfm	L/s	cfm	L/s	cfm	Watts
50	0.2	57	122	50	105	59	125	127	270	227
100	0.4	53	113	48	102	55	117	120	254	224

NOTE: all tests performed at high speed.

2.3 MOUNTING AND SERVICING CONSIDERATIONS

- The two following pictures are showing the minimum clearance needed to open the door completely.

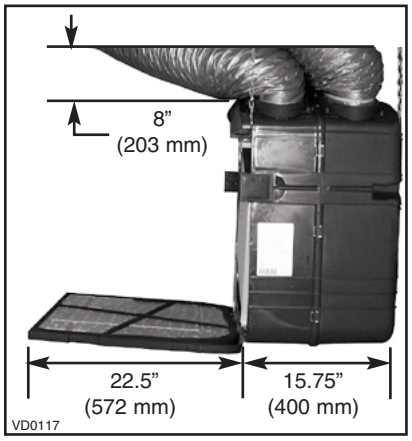

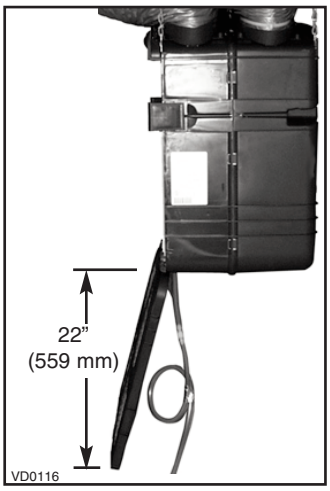

NOTES: 1. The unit door is removable. To do so, remove the stopper (**A**) located on the right side of the door hinge, then, slide the door out of its hinge. For servicing, a minimum of 15" (381 mm) clearance from any obstruction in front of the unit is sufficient to open the door and remove it.
2. A minimum of 8" (203 mm) clearance from any obstruction on top of the unit is required for the ductwork radius turn.

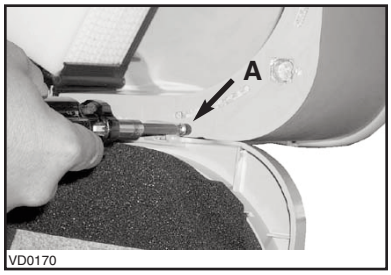

- The joist opening needed to install the Tandem® transition must be 9¾" (248 mm) minimum. Also, the maximum height of the Tandem® transition is 8¾" (222 mm). See Tandem® transition end view beside.

NOTES: 1. If there is not enough space to use the Tandem® transition, the optional exterior single hood must be installed to bring the fresh outside air to the unit. See Section 6.8.
2. When installing a HEPA Filtration model GSFH1K, there is no Tandem® transition.

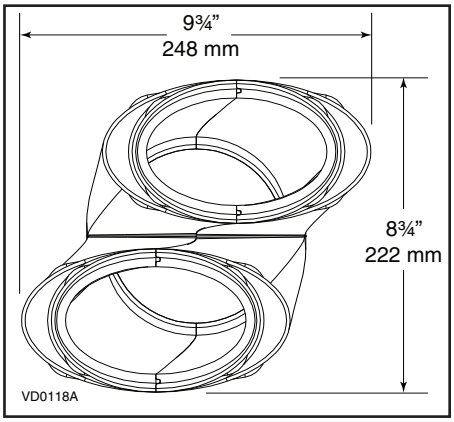

3. RECOVERY NEEDS ACCORDING TO GEOGRAPHICAL LOCATION

When recovery is important, it can be hard to find the appropriate unit. Use the map below to determine which between heat recovery (GSHH3K model) or energy recovery (GSEH3K model) will satisfy the specific needs of the consumers.

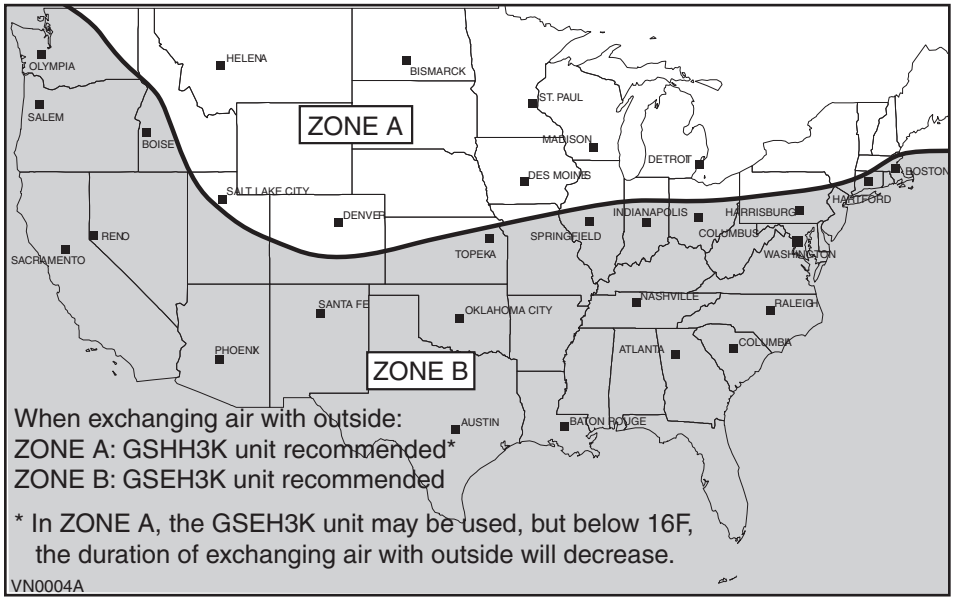

4. PLANNING THE INSTALLATION

The Broan Fresh Air Systems units are versatile appliances capable of delivering filtered air (model GSFH1K) or both filtered and fresh air to your home (models GSVH1K, GSHH3K and GSEH3K). Because each installation is different, it is recommended you take the time to plan your installation. The three main areas to plan for are:

- Where to locate the Broan Fresh Air Systems unit
- How to pick-up the air from the room and distribute the filtered or fresh/filtered air
- Where to bring fresh air from outside and exhaust stale air to outside (models GSVH1K, GSHH3K and GSEH3K).

Use the following chart to determine the appropriate installation method for the unit.

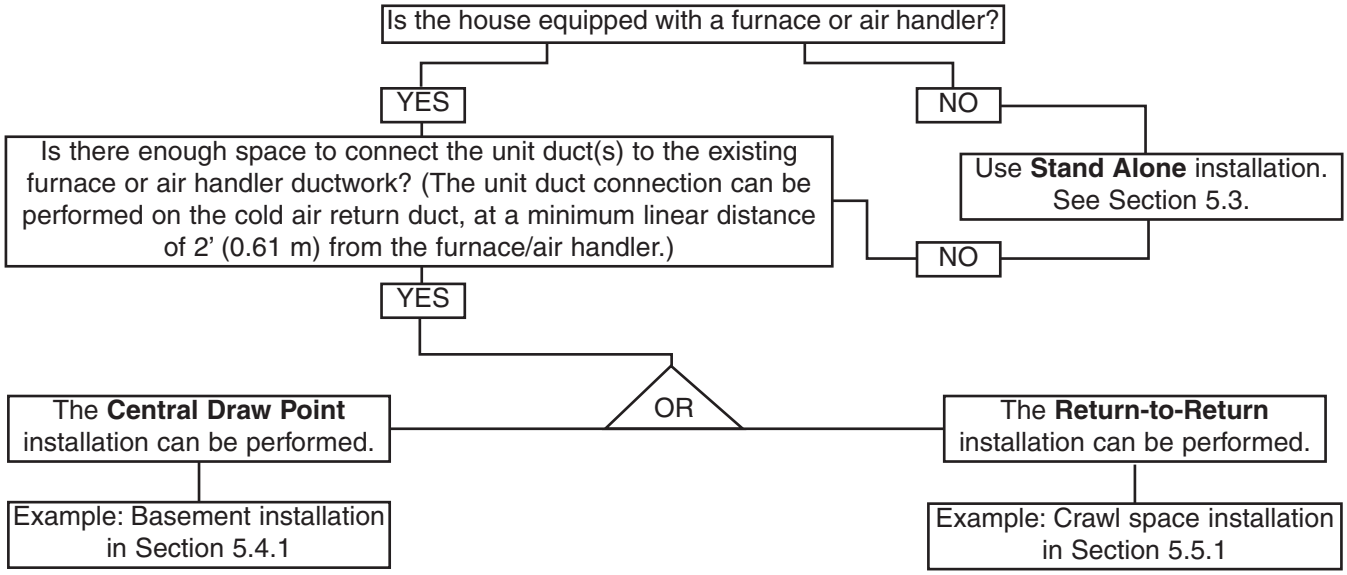

CAUTION

Do not install duct or duct connector directly above the furnace. Do not connect the plenum connection closer than 2' (0.61m) to the furnace, as measured along the length of the duct.

4. PLANNING THE INSTALLATION (CONT'D)

4.1 Planning of the Ductwork

- Keep it simple. Plan for a minimum of bends and joints.
- Keep the length of insulated ducts to the outside of home to a minimum.(not for HEPA Filtration model GSFH1K).
- Do not ventilate crawl spaces or cold rooms.
- If the house has two floors or more, be sure to plan for at least one exhaust register on the highest lived-in level.

Use the table below to plan the flexible ducts length.

FLEXIBLE DUCT LENGTH TABLE

	Maximum recommended length to reach 105 cfm	Maximum recommended length to reach 95 cfm
Insulated fresh air duct from outside (6" diameter)	up to 10'	from 10' to 20'
Insulated exhaust air duct to outside (6" diameter)	up to 10'	from 10' to 20'
	Recommended maximum length to reach 270 cfm	Recommended maximum length to reach 240 cfm
Stale air duct from inside (8" diameter)	Combined: 40'	Combined: 60' with stale air duct not to exceed 36'
Filtered air duct to inside (8" diameter)		

⚠ WARNING

Do not attempt to recover in any ways the exhaust air from a dryer or a range hood. This would cause clogging of the filters and recovery module (if applicable); this is also a fire hazard. Not following this warning will void the warranty.

5. TYPICAL INSTALLATIONS

Installations may vary according to the model number, the product orientation (vertical or horizontal) and the location in the home where the unit is installed. Use the following illustrations as guidelines to help you decide the appropriate installation.

The unit allows for multi positional mounting (vertical or horizontal). It may be hung to the joists (preferred method), or it may be laid down on one of three surfaces, and installed either vertically or horizontally.

NOTE: For more details, see Points 5.3 and 5.4 in Section 5 INSTALL THE UNIT.

In every case, bathroom fans and a range hood should be used as spot ventilation to exhaust stale air. Also, for homes with more than one level, we recommend placing one exhaust register at the highest lived-in level.

There are three installation methods: Stand Alone, Central Draw Point* and Return-to-Return*.

* Different connections to a forced air system.

Multiple furnaces or air handlers may require installation of Broan Fresh Air Systems on each system for maximum IAQ benefit.

NOTE: A grounded three-prong electrical outlet has to be available within 3 feet from the unit.

INSTALLATION TYPE SHOWN: CENTRAL DRAW POINT
SEE SECTION 5.4.1

SECTION 7: CONTROLS

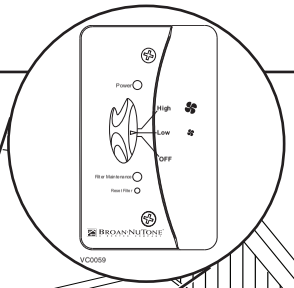

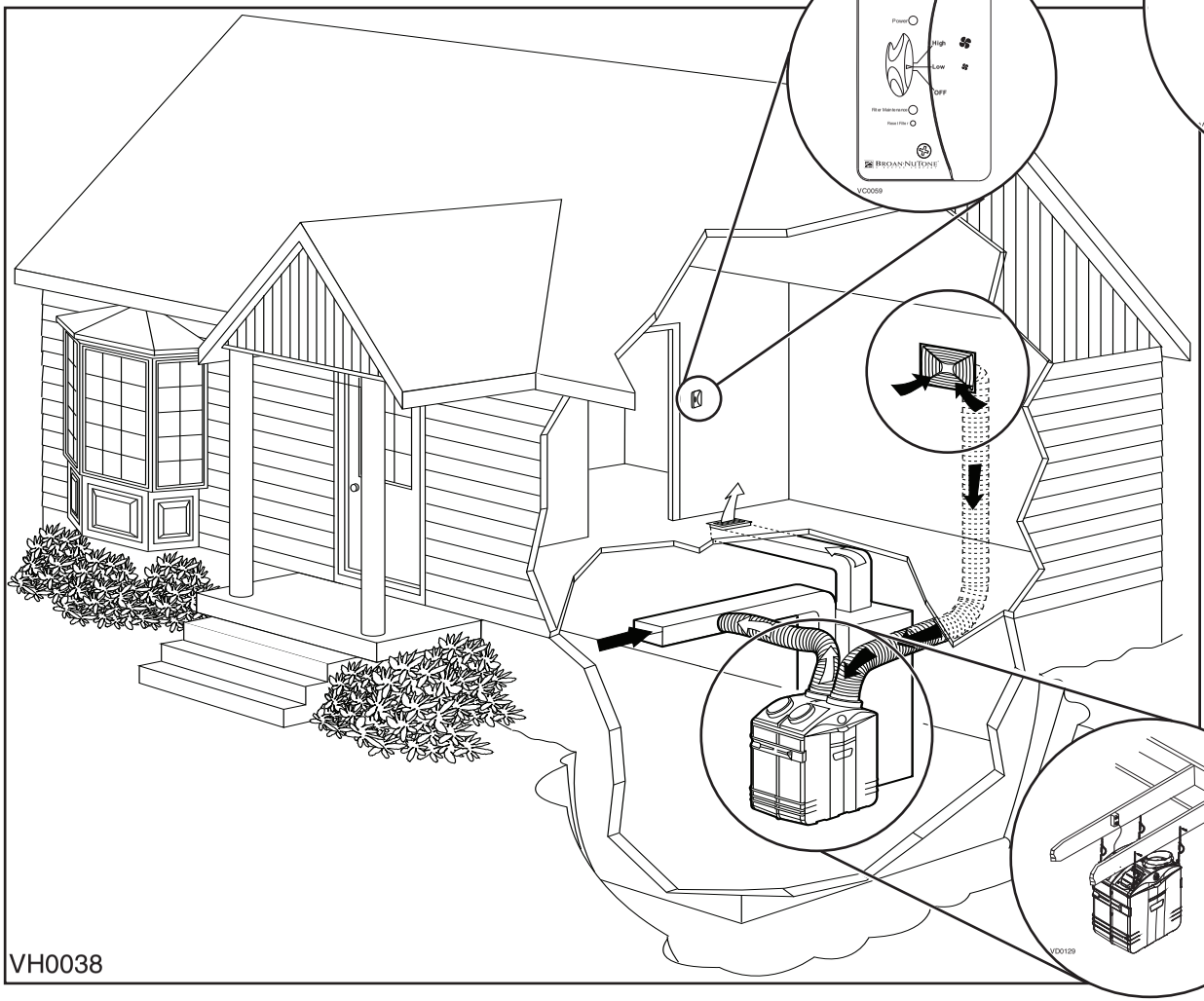

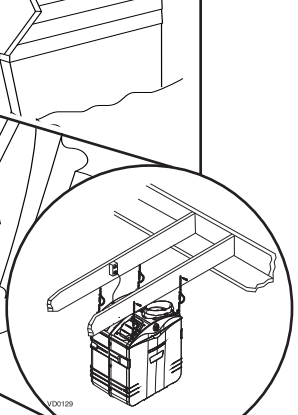

HOW TO HANG THE UNIT
SEE SECTION 6.4

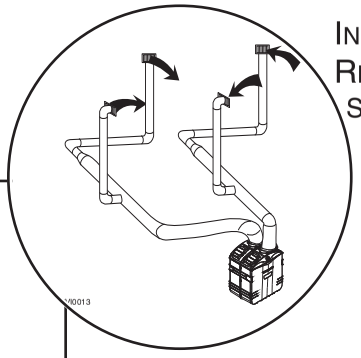

INSTALLING 8" DUCTS AND REGISTERS
SEE SECTIONS 6.5

STAND ALONE INSTALLATION
SEE SECTION 5.3.1

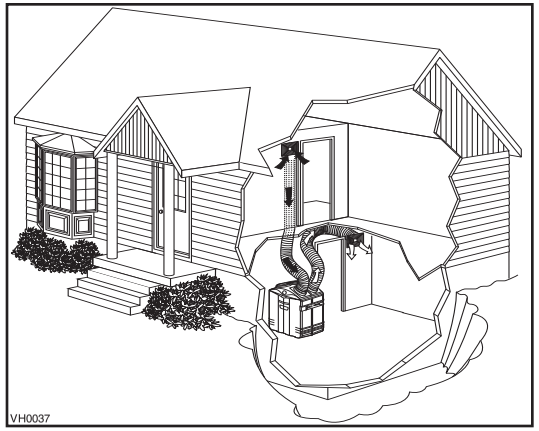

RETURN-TO-RETURN INSTALLATION
SEE SECTION 5.5.1

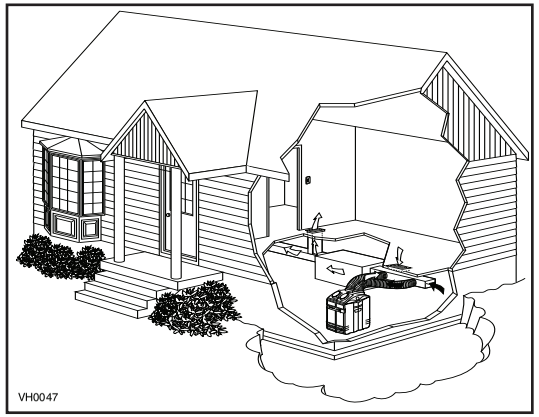

NOTE: OTHER INSTALLATIONS SHOWN NEXT PAGES

INSTALLATION TYPE SHOWN: CENTRAL DRAW POINT
SEE SECTION 5.4.1

SECTION 7: CONTROL

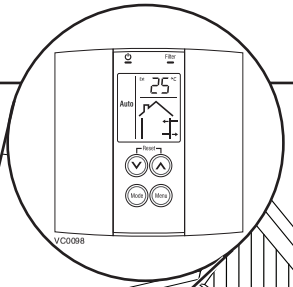

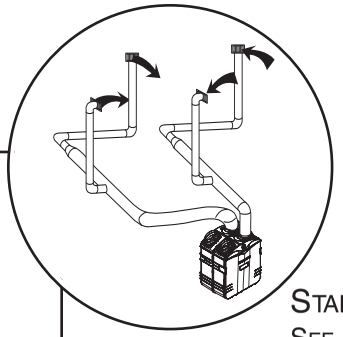

INSTALLING 8" DUCTS AND REGISTERS
SEE SECTIONS 6.5

STAND ALONE INSTALLATION
SEE SECTION 5.3.1

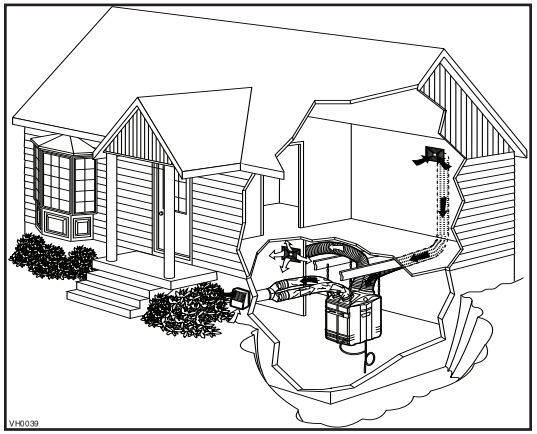

RETURN-TO-RETURN INSTALLATION
SEE SECTION 5.5.1

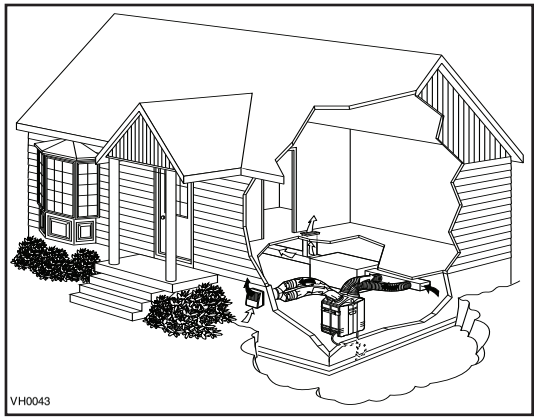

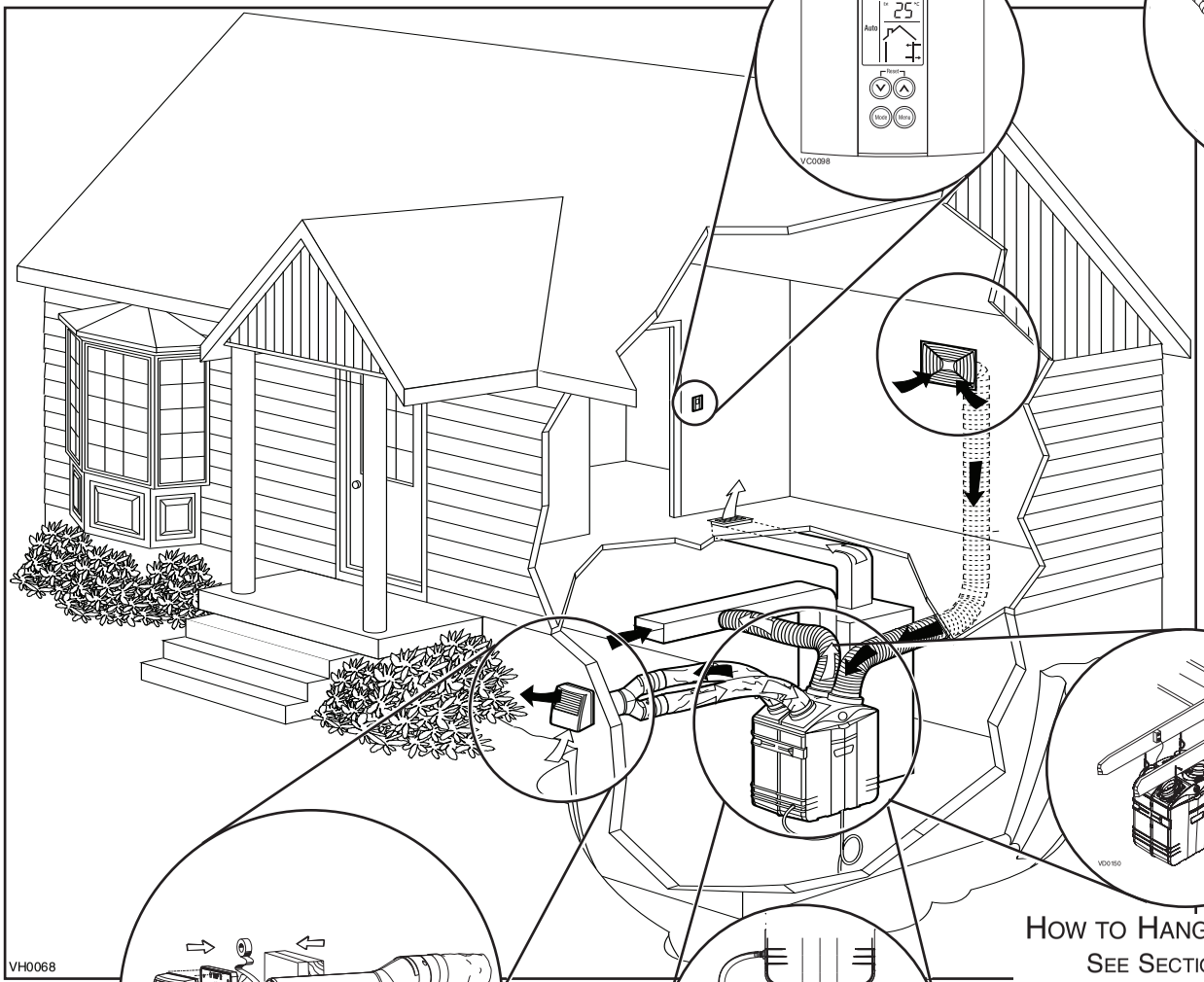

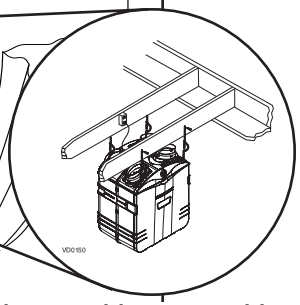

HOW TO HANG THE UNIT
SEE SECTION 6.4

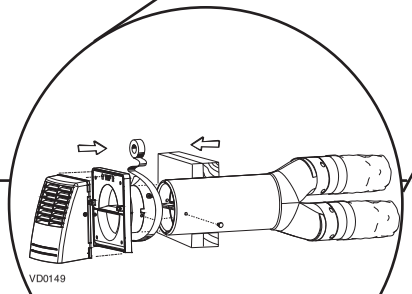

OUTDOOR CONNECTION
SEE SECTIONS 6.6, 6.7, 6.8 AND 6.9

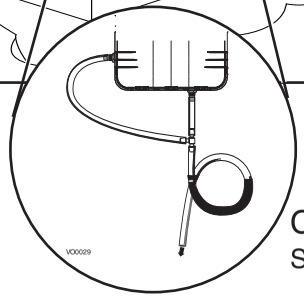

CONNECTING THE DRAIN
SEE SECTION 6.10

NOTE: OTHER INSTALLATIONS SHOWN NEXT PAGES

5. TYPICAL INSTALLATIONS (CONT'D)

5.3 Stand Alone Installation

(Primarily for homes with no central air mover or equipped with wall furnaces, radiant hot water or electric baseboard heating.)

5.3.1 Basement

- Ideal for homes without a central furnace in the basement. Allows filtration and a better air circulation throughout the house.
- Easy access to perform the periodic filter maintenance and servicing.
- Offers an ambient temperature above freezing (32°F - 0°C).
- The HEPA Filtration model GSFH1K has no connection to the outside, so all parts encircled are not required.

INSTALLATION CONSIDERATIONS:

- Installing the unit near an exterior wall will shorten the length of the insulated ducts (not necessary for HEPA Filtration only model GSFH1K).
- If a HEPA Filtration Fresh Air & Heat Recovery Ventilation model GSHH3K is installed, a water drain must be close to collect the run-off.

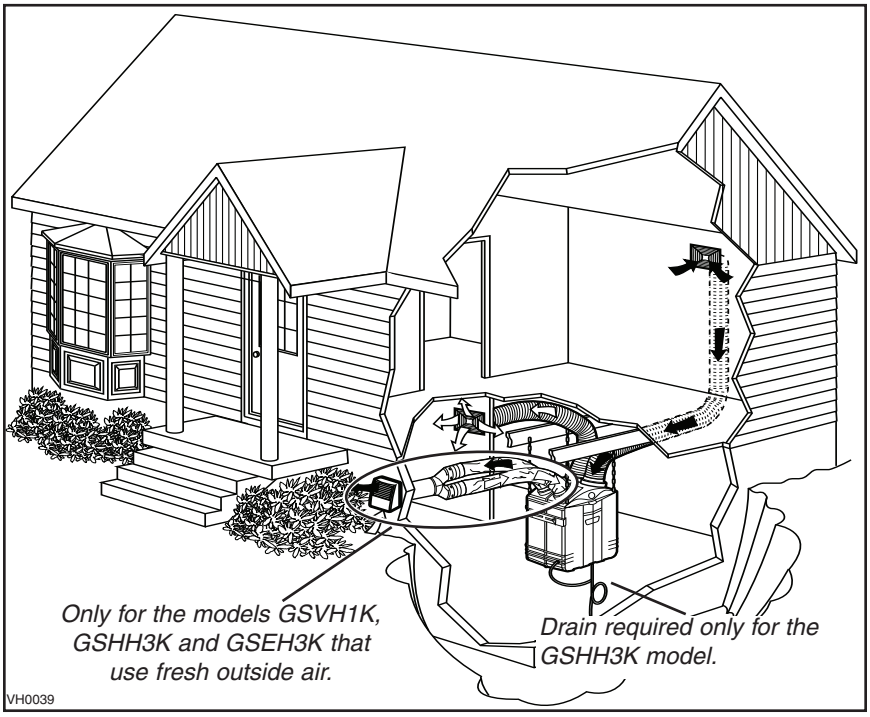

5.3.2 Garage Closet

- Ideal for homes without a central furnace, or limited space applications, allows filtration and a better air circulation throughout the house.
- Easy access to perform the periodic maintenance (twice a year).
- The HEPA Filtration model GSFH1K has no connection to outside, so all parts encircled are not required.

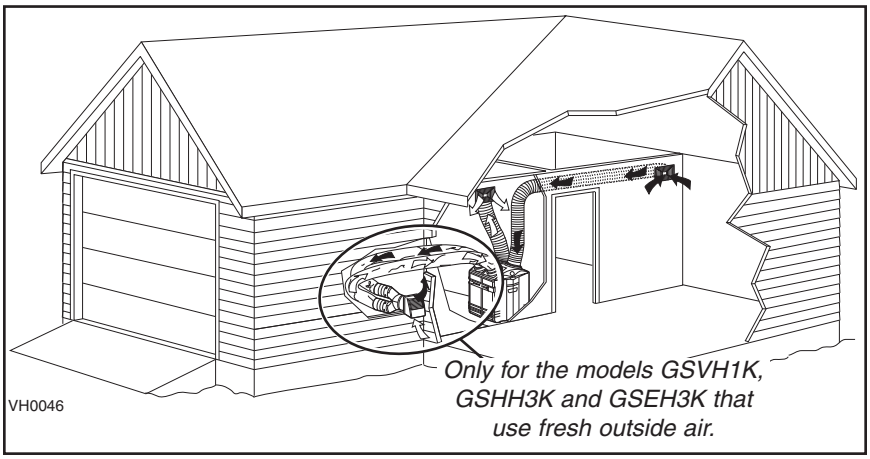

CAUTION

When the ambient temperature for the unit location is below freezing (32°F - 0°C), the unit must run continuously to prevent condensation.

INSTALLATION CONSIDERATIONS:

- Installing the unit near an exterior wall will shorten the length of the insulated ducts (not necessary for HEPA Filtration model GSFH1K).
- If a HEPA Filtration Fresh Air & Heat Recovery Ventilation model GSHH3K is installed, a water drain must be close to collect the run-off.
- All ducts must be insulated.
- For the HEPA Filtration, Fresh Air & Heat Recovery Ventilation (GSHH3K) and the HEPA Filtration, Fresh Air & Energy Recovery Ventilation (GSEH3K) models only, if the ambient temperature around the unit drops below freezing (32°F - 0°C), go to Section 6.11 (Low Temperature Applications) for instructions on drain line protection (GSHH3K only) and other cold environment installation details.

5. TYPICAL INSTALLATIONS (CONT'D)

5.3 Stand Alone Installation (cont'd)

(Primarily for homes with no central air mover or equipped with wall furnaces, radiant hot water or electric baseboard heating.)

5.3.3 Attic

- Ideal for homes without a central furnace, or limited space applications, allows filtration and a better air circulation throughout the house.
- Only one partition to go through to install the registers.
- No visible ducts.
- The HEPA Filtration model GSFH1K has no connection to the outside, so all parts encircled are not required.

CAUTION

When the ambient temperature for the unit location is below freezing (32°F - 0°C), the unit must run continuously to prevent condensation.

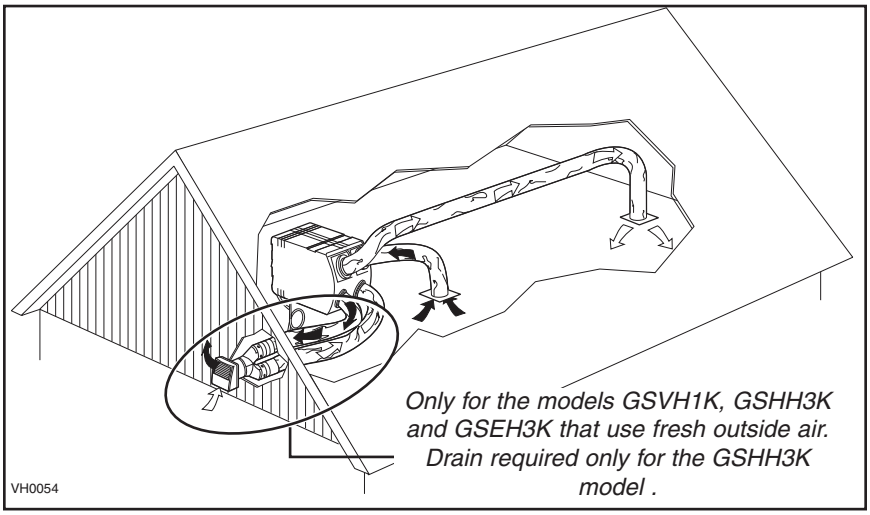

Only for the models GSVH1K, GSHH3K and GSEH3K that use fresh outside air. Drain required only for the GSHH3K model .

INSTALLATION CONSIDERATIONS:

- Installing the unit near an exterior wall will shorten the length of the insulated ducts (not necessary for HEPA Filtration only model GSFH1K).
- If a HEPA Filtration Fresh Air & Heat Recovery Ventilation model GSHH3K is installed, a water drain must be close to collect the run-off.
- All ducts must be insulated.
- For the HEPA Filtration, Fresh Air & Heat Recovery Ventilation (GSHH3K) and the HEPA Filtration, Fresh Air & Energy Recovery Ventilation (GSEH3K) models only, if the ambient temperature around the unit drops below freezing (32°F - 0°C), go to Section 6.11 (Low Temperature Applications) for instructions on drain line protection (GSHH3K only) and other cold environment installation details.

5.4 Central Draw Point Installation

(Connection to a Forced Air System)

5.4.1 Basement

- Simplified installation by using the home existing ductwork to supply filtered air throughout the house.
- The central draw point should be located in the main area where most of the pollutants are produced.
- The furnace/air handler does not need to run continuously.
- Easy access to perform the periodic maintenance (twice a year).
- Offers an ambient temperature above freezing (32°F - 0°C).
- The HEPA Filtration model GSFH1K has no connection to outside, so all parts encircled are not required.

INSTALLATION CONSIDERATIONS:

- Installing the unit near an exterior wall will shorten the length of the insulated ducts (not necessary for HEPA Filtration only model GSFH1K).
- If a HEPA Filtration Fresh Air & Heat Recovery Ventilation model GSHH3K is installed, a water drain must be close to collect the run-off.

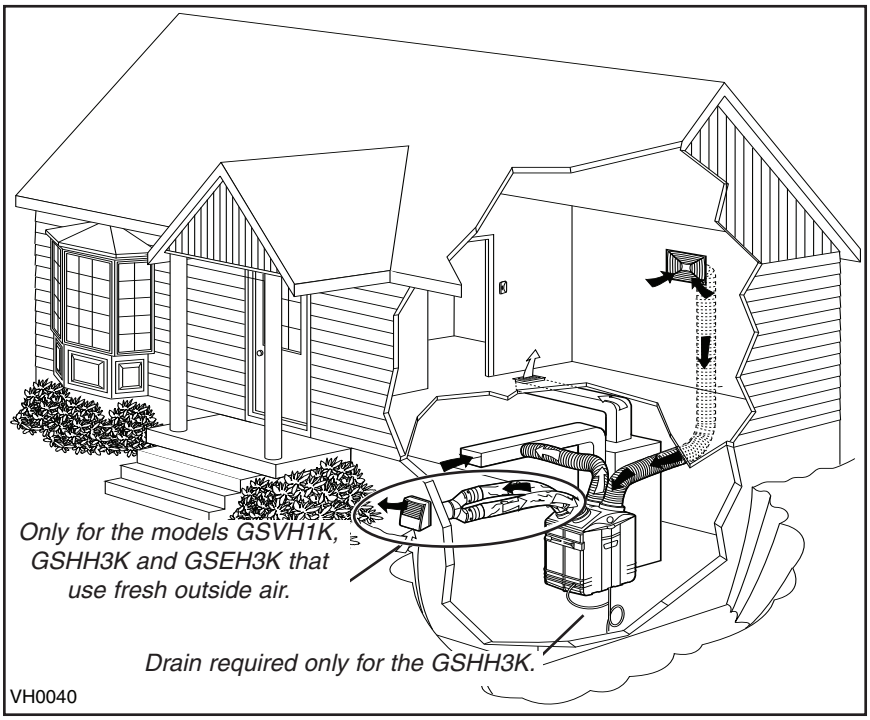

Only for the models GSVH1K, GSHH3K and GSEH3K that use fresh outside air.

Drain required only for the GSHH3K.

5. TYPICAL INSTALLATIONS (CONT'D)

5.5 Return-to-Return Installation

(Connection to a Forced Air System)

5.5.1 Crawl Space

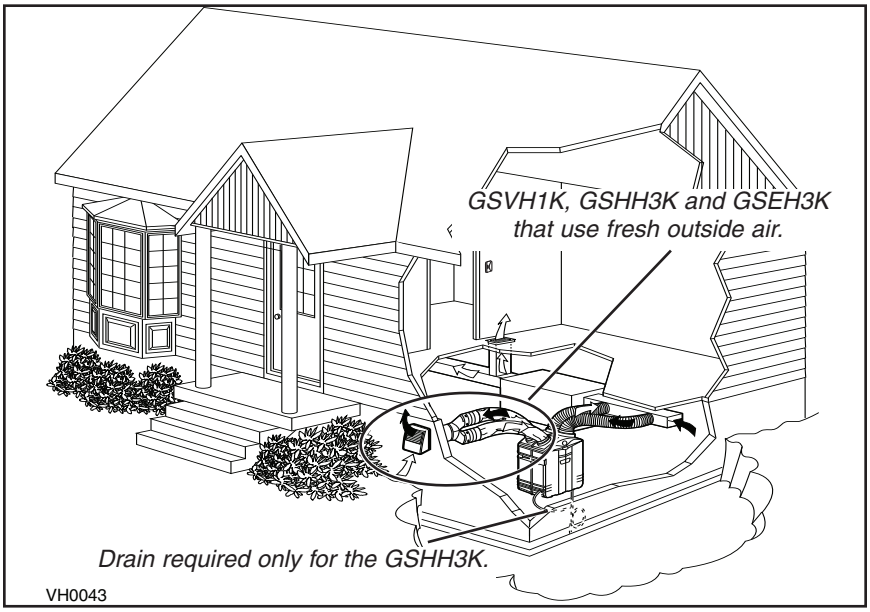

- Simplify the installation by using the existing ductwork.
- Non-visible ducts.
- The HEPA Filtration model GSFH1K has no connection to outside, so all parts encircled are not required.

CAUTION

When the ambient temperature for the unit location is below freezing (32°F - 0°C), the unit must run continuously to prevent condensation.

INSTALLATION CONSIDERATIONS:

- Installing the unit near an exterior wall will shorten the length of the insulated ducts (not necessary for HEPA Filtration model GSFH1K).
- If a HEPA Filtration Fresh Air & Heat Recovery Ventilation model GSHH3K is installed, a water drain must be close to collect the run-off.
- To avoid the cross-contamination and achieve highest efficiencies, the furnace / air handler blower must always be ON (or the efficiency will be affected).
- The HEPA Filtration Fresh Air Ventilation model GSVH1K needs to be ON all the time, since it doesn't have motorized dampers. If this unit is OFF, then the furnace / air handler will draw cold outdoor air inside.
- All ducts must be insulated.
- For the HEPA Filtration, Fresh Air & Heat Recovery Ventilation (GSHH3K) and the HEPA Filtration, Fresh Air & Energy Recovery Ventilation (GSEH3K) models only, if the ambient temperature around the unit drops below freezing (32°F - 0°C), go to Section 6.11 (Low Temperature Applications) for instructions on drain line protection (GSHH3K only) and other cold environment installation details.

5.5.2 Attic

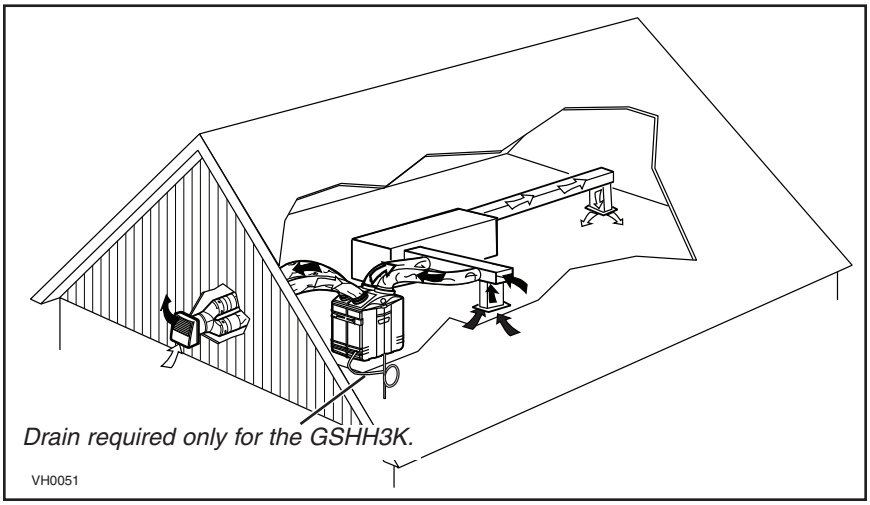

- Simplify the installation by using the existing ductwork.
- Non-visible ducts.
- The HEPA Filtration model GSFH1K has no connection to outside, so all parts encircled are not required.

CAUTION

When the ambient temperature for the unit location is below freezing (32°F - 0°C), the unit must run continuously to prevent condensation.

INSTALLATION CONSIDERATIONS:

- If a HEPA Filtration Fresh Air & Heat Recovery Ventilation model GSHH3K is installed, a water drain must be close to collect the run-off.
- All ducts must be insulated.
- For the HEPA Filtration, Fresh Air & Heat Recovery Ventilation (GSHH3K) and the HEPA Filtration, Fresh Air & Energy Recovery Ventilation (GSEH3K) models only, if the ambient temperature around the unit drops below freezing (32°F - 0°C), go to Section 6.11 (Low Temperature Applications) for instructions on drain line protection (GSHH3K only) and other cold environment installation details.

6. INSTALL THE UNIT

6.1 Tools and Materials

Here are the tools and materials needed to perform the installation:

- Phillips screwdriver no. 2 or Robertson no. 1
- Hammer and flat blade screwdriver (for plenum connection installation only, to make holes in existing metal duct)
- Scissors or utility knife (to cut duct tape)
- Duct tape
- Tin snips or metal shear (for plenum connection installation only, to cut ductwork)
- Aluminum duct tape (for plenum connection installation only, use SMACNA duct tape)
- Jigsaw (except for the HEPA Filtration model GSFH1K)
- Extension cord
- Caulking gun and caulking (except for the HEPA Filtration model GSFH1K)
- 6" Diameter insulated ducting (except for the HEPA Filtration model GSFH1K)
- 8" Diameter insulated ducting.

NOTE: A 3-prong grounded 120 volt AC power outlet must exist or be installed within 3 ft of the unit, prior to unit installation.

6.2 Mount the Ports on the Unit

Mount the 8" oval ports and the 5" to 6" oval ports on the top of the unit using the screws provided in the hardware box (4 screws no. 8 x 3/4" long per port).

NOTES: 1. Although 4 screws are provided and prefered; only 1 screw per port is required to meet code.
2. The HEPA Filtration only model has no 5" to 6" oval ports.
3. Do not install the front 8" oval port (item **1** in illustration) at this time.

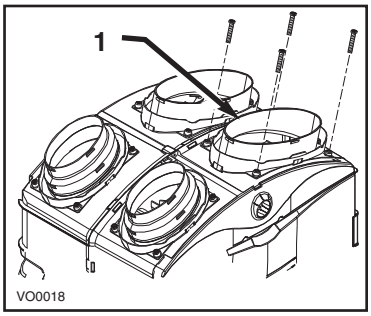

6.3 Installation Using Isolator Pads

If the unit cannot be hung, use the four adhesive square isolation pads provided with the unit. According to your needs and model (with or without drain), you can install the unit either in vertical or horizontal position.

CAUTION

Make sure the unit is level.

CAUTION

When a HEPA Filtration Fresh Air & Heat Recovery Ventilation unit model GSHH3K is installed with adhesive isolator pads, keep a minimum clearance of 4" between the unit and the ground (or shelf) for the drain.

6.4 For Suspended Applications

Use the four chains and springs in the hardware pack provided with the unit. According to your needs and model type, you can install the unit either in a vertical or horizontal position.

Horizontal position (left side)
All models

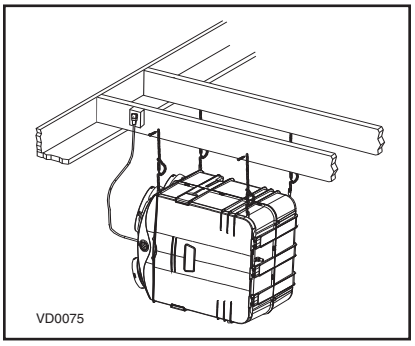

Vertical position - All models

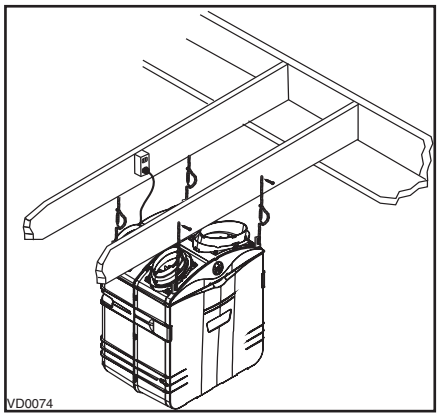

Horizontal position (right side)
Model GSFH1K only

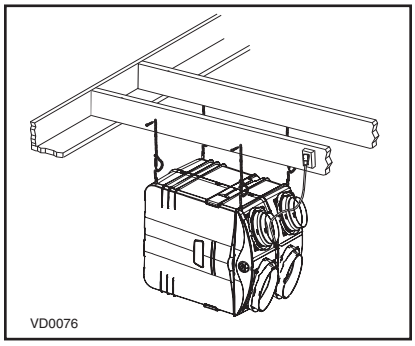

6. INSTALL THE UNIT (CONT'D)

6.4 FOR SUSPENDED APPLICATIONS (CONT'D)

CAUTION

Make sure the unit is level.

- To remove the door, verify the switch knob is in the OFF position in order to unlock the door. Unlatch the door, using the 2 latches to open. Remove the stopper (**A**) located on the right side of the door hinge, then, slide the door out of its hinge.

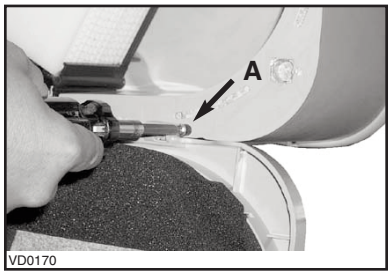

VD0170

- Using a screwdriver, remove the two retaining screws of the front plate as shown, and carefully remove the front plate from the unit.

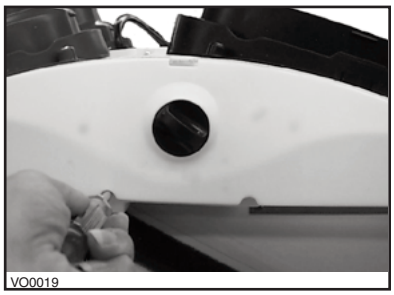
VO0019

- Insert the four hooks in the square holes and fix them to the unit using four screws no. 8-32 x 3/4".

VO0020

CAUTION

Take care to insert the screws perpendicular to their hooks, in order to avoid potential damages due to loosen hooks. See illustrations below.

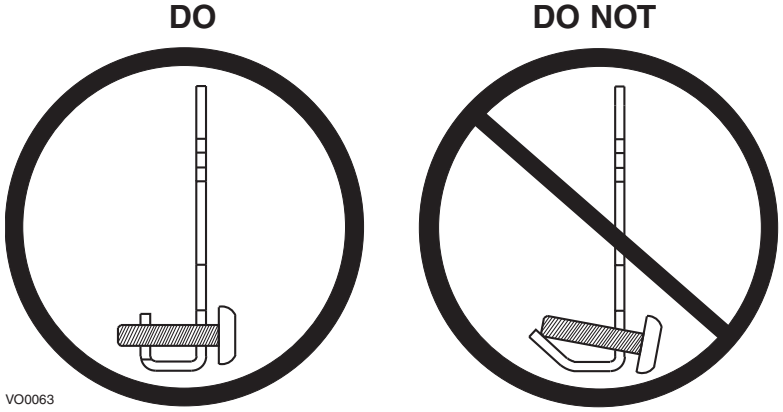

VO0063

6. INSTALL THE UNIT (CONT'D)

6.4 For Suspended Applications (cont'd)

NOTE: To wire the wall control, go to Section 7.4.

- Reinstall the front plate and the door.

- Hang the unit to the joists, using four no. 8 x 1½" screws, four chains and four spings. See illustration.

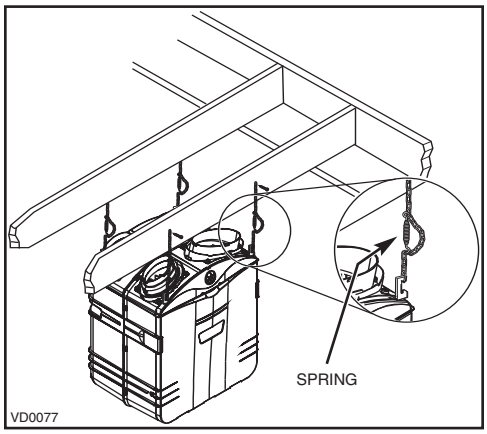

6.5 Installing 8" Ducts and Registers

6.5.1 Stand Alone System (as illustrated in Section 5.3)

Stale air collection ductwork

⚠ WARNING

Never install a stale air exhaust register in a closed room where a combustion device operates, such as a gas furnace, a gas water heater or dryer, or a fireplace.

- Install the stale air collection register in the main area where the contaminants are produced: kitchen, living room, etc. Position the register as far from any stairway as possible and in a way the air circulates all the lived-in spaces in the house.
- If the register is installed in the kitchen, it must be located at least 4' (1.2 m) from the range.
- Install the register 6"-8" (152 to 203 mm) from the ceiling on an interior wall OR install it in the ceiling.

Fresh / Filtered air distribution ductwork

- Install the fresh / filtered air distribution register in a large, open area in the lowest level to ensure the greatest possible air circulation. Keep in mind the filtered air register must be located as far as possible from the stale air collection point.
- Install the register 6"-8" (152 to 203 mm) from the ceiling on an interior wall OR install it in the ceiling. The duct length should be at least 15' (4.6 m). (The fresh / filtered air will then flow through the room and mix with room air, ensuring a continuous recirculating airflow.)

How to connect the 8" flexible duct to the registers and unit duct connector.

- Once the register location is determined, cut out a 10¼" x 6 7/8" (260 mm x 175 mm) hole. Run one end of the 8" flexible duct through the hole and fix it to the duct connector (**1**), using a 30" tie wrap and duct tape. Fix the duct connector to the wall (or ceiling) using its four plastic anchors and no. 8 x 3/4" screws. Then, snap on the register (**2**).

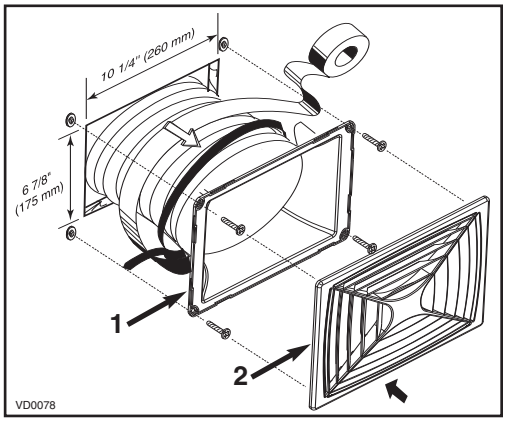

6. INSTALL THE UNIT (CONT'D)

6.5 Installing 8" Ducts and Registers (cont'd)

6.5.1 Stand Alone System (as illustrated in Section 5.3) (cont'd)

How to connect the 8" flexible duct to the unit duct connector.

- Each port is identified on top of the unit (See illustrations below). Using the provided colored sticker dot, identify which duct it is (red dot for stale airflow and blue dot for filtered airflow). Repeat the procedure for the other register.
- Attach the fresh air to building duct (the one with the blue dot) to its corresponding port, using tie wrap (**1**). Then, attach the exhaust air from building duct (the one with the red dot) to the other 8" port (**2**).

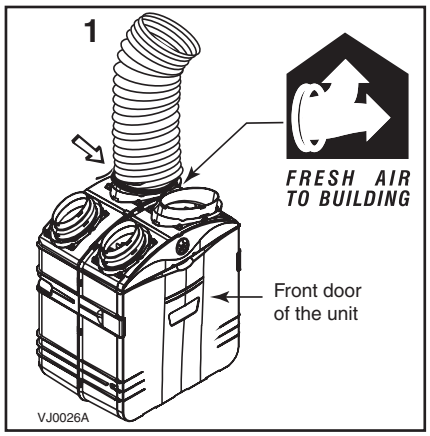

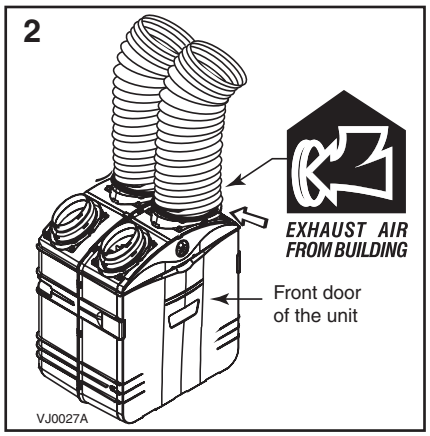

NOTE: Use 8" insulated duct only (not included) when ductwork may go where ambient temperature is over or below comfort zone.

6.5.2 Central Draw Point (as illustrated in Section 5.4)

Stale air ductwork

Same as for Stand Alone System, described in point 6.5.1.

Filtered air ductwork (Return side connection)

⚠ WARNING

When performing duct connections, always use approved tools and materials. Respect all corresponding laws and/or safety regulations. Please refer to your local building code. Use only UL listed duct tape.

- Trace a 10 ¼" long x 6 7/8" high (260 mm x175mm) opening on the furnace / air handler return duct at a minimum linear distance of 2 ft (0.61 m) upstream (return side) from furnace / air handler.

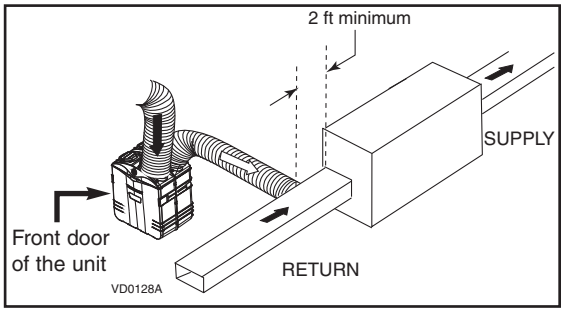

- Using a metal shear or a hammer and a flat blade screwdriver, punch a hole into the furnace / air handler return duct. Then, using metal shear, cut out the rectangular hole.

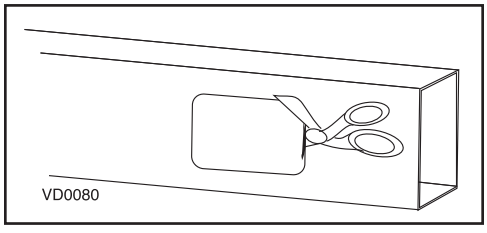

- Mount the duct connector to the furnace / air handler duct using the provided four retaining screws (no. 8 x 3/4"). Seal with UL approved duct tape.

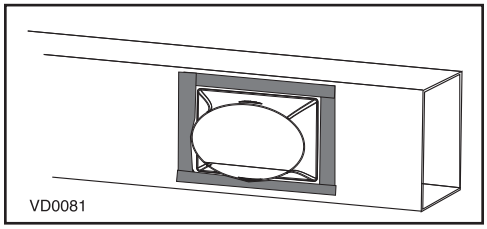

6. INSTALL THE UNIT (CONT'D)

6.5 Installing 8" Ducts and Registers (cont'd)

6.5.2 Central Draw Point (as illustrated in Section 5.4) (cont'd)

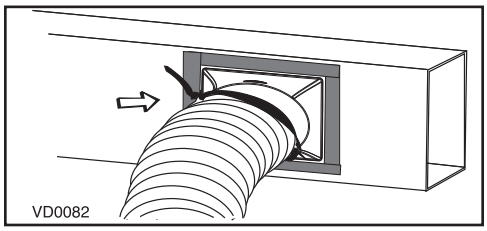

- Take one end of the 8" flexible duct and slide it over the duct connector. Secure with a tie wrap. Carefully seal the connection with UL approved duct tape. Identify the duct using the blue sticker dot included.

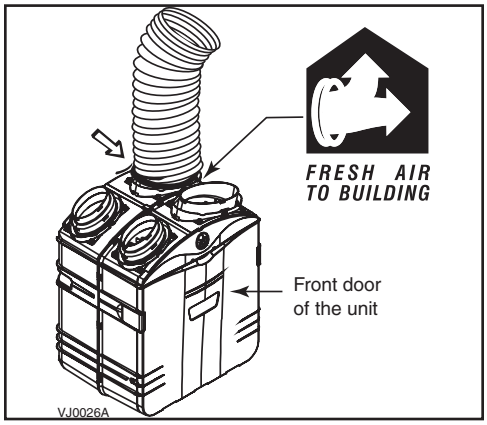

- Attach this duct to the ***FRESH AIR TO BUILDING*** port (see icon on the top of the unit) using tie wrap and duct tape.

6.5.3 Return-to-Return (as illustrated in Section 5.5)

Filtered air ductwork (Return side connection)

Same as for Central Draw Point, described in point 6.5.2.

Stale air ductwork (Return side connection)

⚠ WARNING

When performing duct connections, always use approved tools and materials. Respect all corresponding laws and/or safety regulations. Please refer to your local building code. Use only UL listed duct tape.

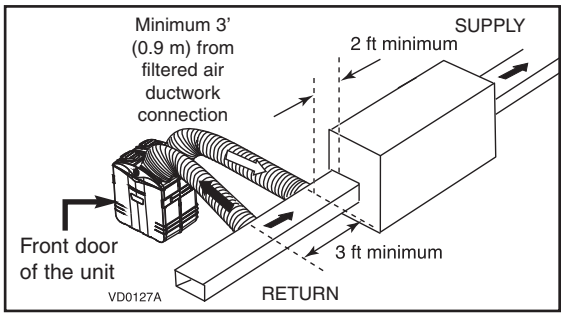

- Locate the return air inlet duct at least 2' (0.61 m) upstream (return side) from furnace / air handler. Locate the take-off duct opening at least 3' (0.9m) from the filtered air ductwork connection. Proceed as for the filtered air ductwork, but instead of using the blue dot sticker to identify the duct, use the red dot.

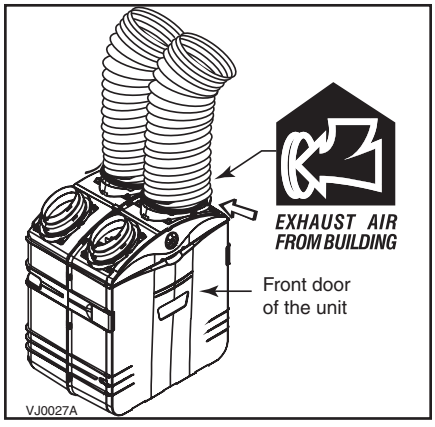

- Attach this duct to the ***EXHAUST AIR FROM BUILDING*** port (see icon on the top of the unit) using tie wrap and duct tape.

6. INSTALL THE UNIT (CONT'D)

6.6 Installing Insulated Flexible Ducts to Tandem® Transition (GSVH1K, GSHH3K & GSEH3K models only)

CAUTION

Make sure the insulated ductwork vapor barrier does not tear during installation.

Use the following procedure for connecting the insulated flexible ducts to the Tandem® transition* (*EXHAUST AIR TO OUTSIDE* and *FRESH AIR FROM OUTSIDE*).
*Patent pending.

NOTES: 1. If the joists are perpendicular to the ducts, or if the connection to the exterior hood is in a limited area, your installation will need two exterior hoods instead of one AirDuo™ exterior hood. In this case, do not use the Tandem® transition.
2. If there is not sufficient space to install the Tandem® transition, both optional single exterior hood and AirDuo™ exterior hood must be used. Identify each insulated duct. For fresh air from outside duct, use the blue sticker dots (one dot at each end). For exhaust air to outside duct, use the red sticker dots (one dot at each end).
Then, go to Section 6.8 and 6.9.

6.6.1 Connection to Tandem® transition

1. For each duct, pull back the insulation to expose the interior flexible duct.
2. Connect the interior flexible duct to the smaller part of the Tandem® transition (5" oval) using a 24" tie wrap.
NOTE: If you are using a 6" diameter insulated duct, use the bigger part of the Tandem® transition (6" oval).
3. Pull the insulation over the joint. Pull the vapor barrier over the insulation.
4. Apply duct tape gently to the joint in order to make an airtight seal. See figures below.

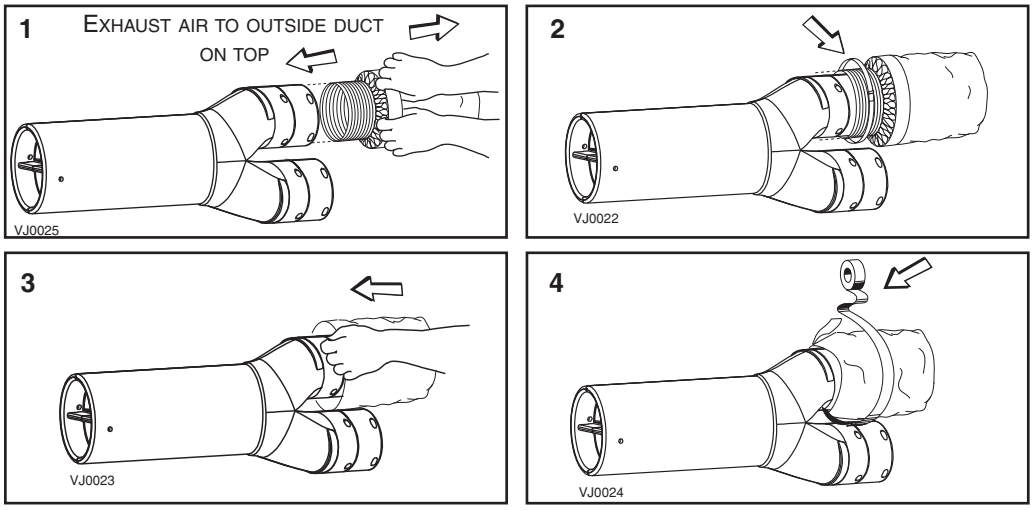

Identify each insulated duct. For fresh air from outside duct, use the blue sticker dots (one dot at each end). For exhaust air to outside duct, use the red sticker dots (one dot at each end). **Be careful to identify the exhaust air to outside duct (red dot) at the upper section of the transition.**

6.7 Installing AirDuo™ Exterior Hood* (GSVH1K, GSHH3K and GSEH3K models only)

6.7.1. Assembling AirDuo™ Exterior Hood

AirDuo™ exterior hood requires assembly. Assemble the top metal screen, the plastic grille and the bottom metal screen to AirDuo™ exterior hood. Use provided screws. See illustration beside.

*Patent pending

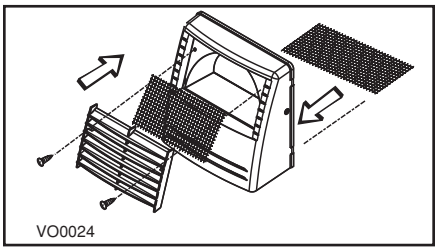

6. INSTALL THE UNIT (CONT'D)

6.7 INSTALLING AIRDUO™ EXTERIOR HOOD* (GSVH1K, GSHH3K AND GSEH3K MODELS ONLY) (CONT'D)

6.7.2 LOCATING THE AIRDUO™ EXTERIOR HOOD

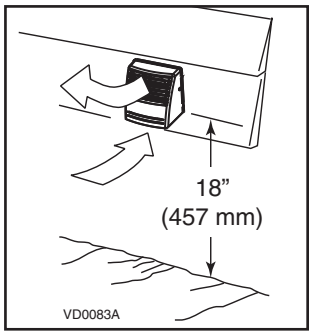

The AirDuo™ exterior hood must be installed at a minimum distance of 18 inches (457 mm) above the ground. See illustration beside.

⚠ WARNING

Make sure this hood is at least 6 feet (1.8 m) away (or more, as per applicable building codes or standards) from sources of contamination such as:

- **High efficiency furnace vent.**
- **Gas meter exhaust, gas barbecue-grill.**
- **Any exhaust from a combustion source.**
- **Garbage bin.**

6.7.3 CONNECTING TANDEM® TRANSITION TO AIRDUO™ EXTERIOR HOOD

CAUTION

The Tandem® transition must be inserted in such a way that the *EXHAUST AIR TO OUTSIDE* duct will be located on the top.

1. Using a jig saw, cut a 6" diameter hole in the exterior wall and insert the Tandem® transition through this hole.

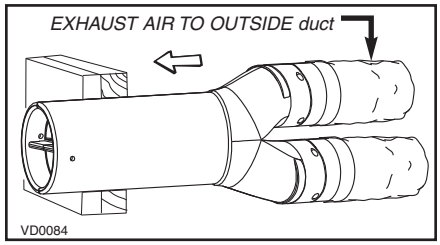

CAUTION

The exterior backplate must be installed with the word "TOP" pointing upward.

2. Joint the end of the Tandem® transition to the rear of the exterior backplate. Secure with 2 Xmas tree pins and seal properly with duct tape.

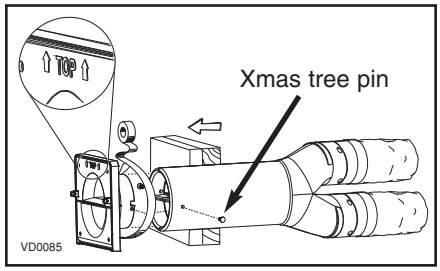

3. Using 4 no. 8 x 1½" screws, attach the exterior backplate to the exterior wall. Seal the outline with caulking, as shown.

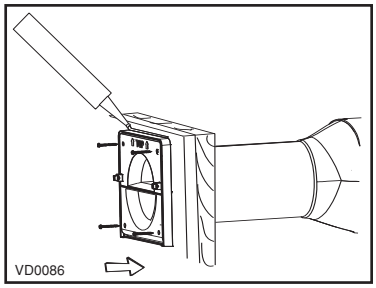

4. Snap the assembled AirDuo™ exterior hood on its backplate and secure with two provided screws (no. 8 x 3/4" long). Go to Section 6.9.

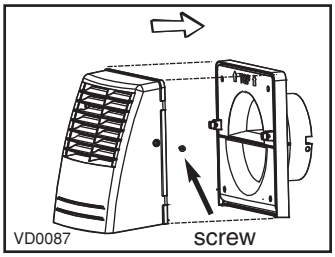

6. INSTALL THE UNIT (CONT'D)

6.7 Installing AirDuo™ Exterior Hood* (GSVH1K, GSHH3K and GSEH3K models only) (cont'd)

6.7.4 Optional Alpine/pine Filter

The special design of this filter makes it much more efficient to catch spores and their particles during intensive pollen season. Using this optional fine mesh filter will extend the life expectancy of your prefilter. To install it, remove the bottom metal screen of the AirDuo™ exterior hood and replace it by the optional Alpine/pine filter. See illustration beside.
(Alpine/pine filter part number: ACCGSUP5)

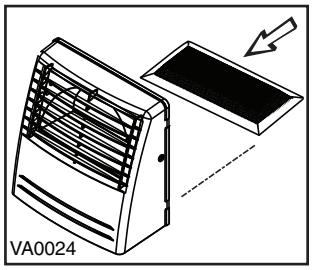

During pollen season, or as needed, remove the asembled hood from its backplate by removing its 2 retaining screws. Then, slide out the Alpine/pine filter and clean it under water. Let dry before reinstalling it on the assembled hood. Reinstall the hood on its backplate.

6.8 Installing Two Exterior Hoods* (GSVH1K, GSHH3K and GSEH3K models only)

6.8.1 Assembling Exterior Hoods

Both exterior AirDuo™ hood and optional exterior single hood require assembly. Assemble the top metal screen, the plastic grille and the bottom metal screen to the AirDuo™ exterior hood*. Use provided screws. Slide the bottom metal screen into the single exterior hood base. See illustrations beside.
*Patent pending

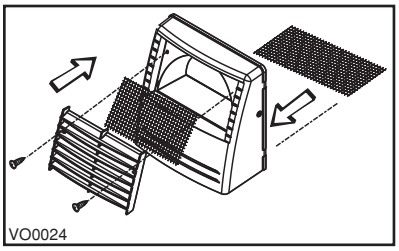

AirDuo™ EXTERIOR HOOD

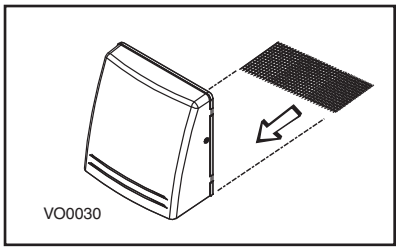

OPTIONAL SINGLE FRESH AIR INLET EXTERIOR HOOD

6.8.2 Locating the AirDuo™ and Optional Exterior Single Hood

CAUTION

Due to its particular design, the <u>AirDuo™ exterior hood must be used only for exhaust hood</u> when performing an installation using 2 exterior hoods. Use the optional single fresh air intake exterior hood for supply air.

⚠ WARNING

Make sure the optional exterior single hood is at least 6 feet (1.8 m) away (or more, as per applicable building codes or standards) from sources of contamination such as:

- **High efficiency furnace vent.**
- **Any exhaust from a combustion source.**
- **Gas meter exhaust, gas barbecue-grill.**
- **Garbage bin.**

The AirDuo™ exterior hood must be installed at a minimum distance of 4 inches (102 mm) from the ground, and the optional single fresh air intake exterior hood must be installed at a minimum distance of 18 inches (457 mm) from the ground. Also, a minimum distance of 6 feet (1.8 m) is required between the hoods to avoid cross-contamination. See illustration below.

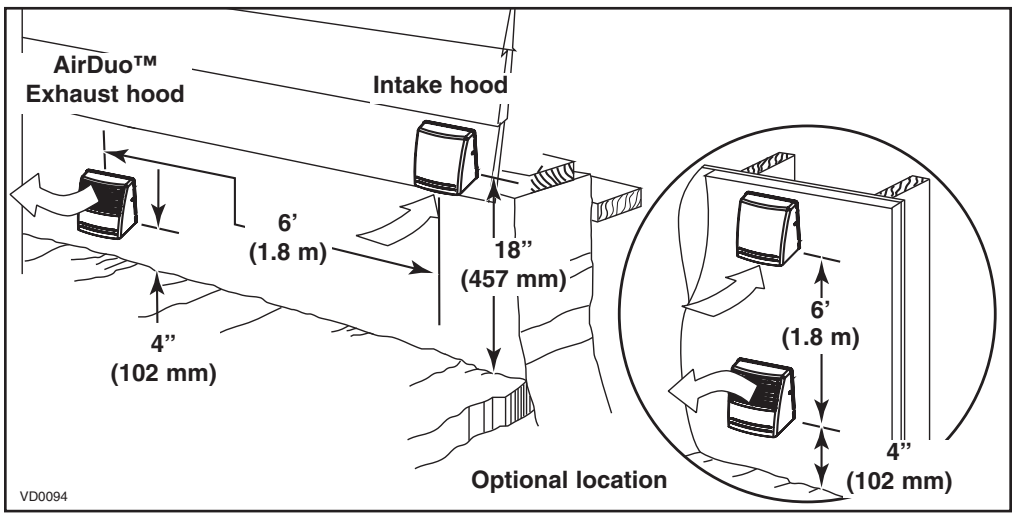

6. INSTALL THE UNIT (CONT'D)

6.8 Installing Two Exterior Hoods* (GSVH1K, GSHH3K and GSEH3K models only) (cont'd)

6.8.3 Connecting Insulated Ducts to Exterior Hoods

CAUTION

Make sure the insulated ductwork vapor barrier does not tear during installation.

1. For each exterior hood, using a jigsaw, cut a 6" diameter hole (if using 5" dia. insulated duct) or a 7" diameter hole (if using 6" dia. insulated duct) in the exterior wall. Identify each insulated duct. For fresh air from outside duct, use the blue sticker dots (one at each end). For exhaust to outside duct, use the red sticker dots (one dot at each end). Run each flexible duct through its respective hole in the wall.

CAUTION

The exterior backplate must be installed with the word "TOP" pointing upward.

2. Pull back the insulation to expose the flexible duct and, using a tie wrap, attach it to the inner ring of the exterior backplate (5" ring for the 5" insulated ducts or 6" ring for the 6" insulated ducts). Carefully seal with duct tape (**A**). Pull the insulation over the joint. Pull the vapor barrier over the insulation and over the outer ring of the exterior backplate. Apply gently duct tape to the joint making an airtight seal (**B**).

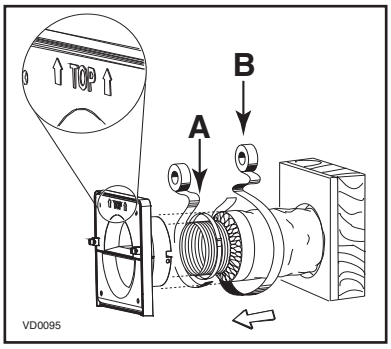

3. Attach the exterior backplate to the exterior wall. Using four provided screws, fix it to the wall. Seal the backplate with caulking, as shown.

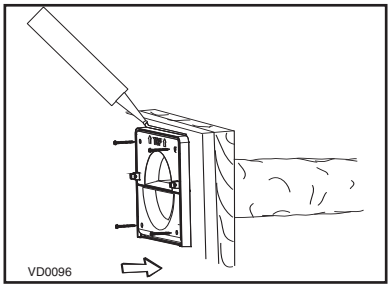

4. Snap each assembled exterior hood on its respective backplate location and secure each of them with their 2 provided screws.

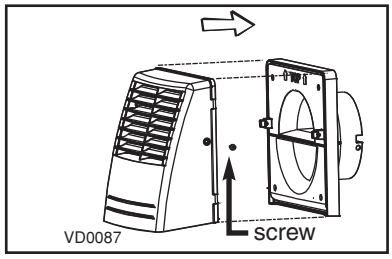

AirDuo™ exterior hood

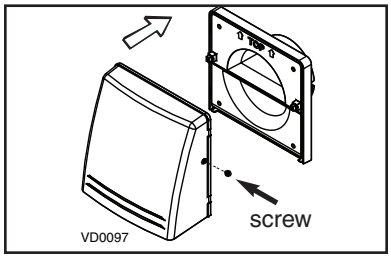

Single exterior fresh air intake hood

6.8.4 Optional Alpine/pine Filter

The special design of this filter makes it much more efficient to catch spores and their particles during intensive pollen season. Using this optional fine mesh filter will extend the life expectancy of your prefilter. To install it, remove the bottom metal screen of the optional exterior single hood and replace it by the optional Alpine/pine filter. See illustration beside.
(Alpine/pine filter part number: ACCGSUP5)

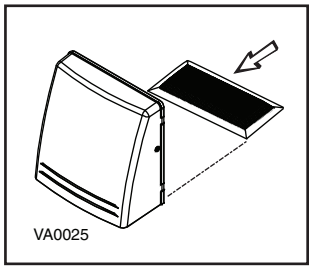

During pollen season, or as needed, remove the assembled hood from its backplate by removing its 2 retaining screws. Then, slide out the Alpine/pine filter and clean it under water. Let dry before reinstalling it on the assembled hood. Reinstall the hood on its backplate.

NOTE: Roof top venting is not recommended.

6. INSTALL THE UNIT (CONT'D)

6.9 CONNECTION TO THE 5" TO 6" OVAL PORTS OF THE UNIT (GSVH1K, GSHH3K AND GSEH3K MODELS ONLY)

Use the following procedure for connecting the insulated flexible ducts to the 5" to 6" oval ports of the unit (*EXHAUST AIR TO OUTSIDE* and *FRESH AIR FROM OUTSIDE*).

1. Pull back the insulation to expose the flexible duct.

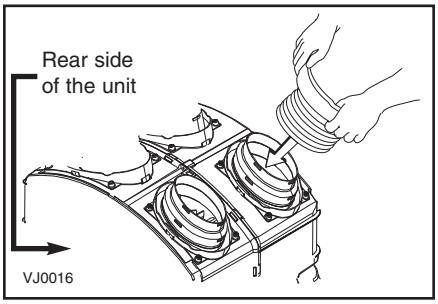

2. Connect the interior flexible duct to the smaller part of the port (5" oval) using a 24" tie wrap.
NOTE: If you are using a 6" diameter insulated duct, use the bigger part of the port (6" oval).

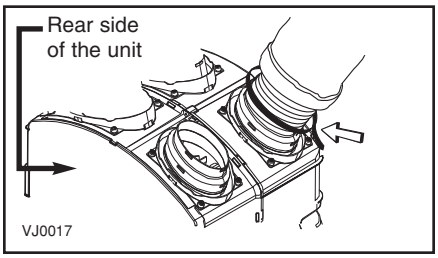

3. Pull the insulation over the joint and tuck it between the inner and outer rings of the port. Pull the vapor barrier over the insulation and over the outer ring of the port.

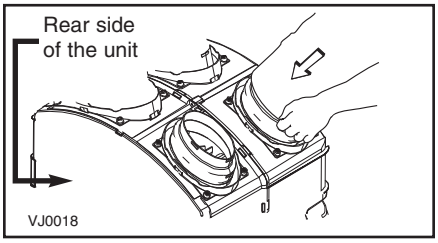

4. Apply duct tape gently to the joint in order to make an airtight seal.

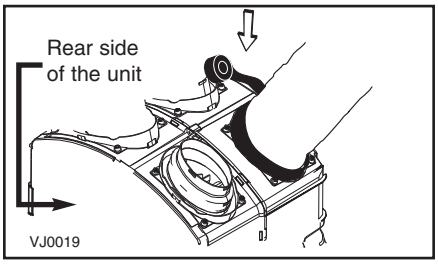

5. Repeat steps 1 to 4 for all insulated ducts.

CAUTION

Avoid compressing the insulation when you pull the tape tightly around the joint. Compressed insulation loses its insulation properties and causes water dripping due to condensation on the exterior surface of the duct.

See figure beside to find the *EXHAUST AIR TO OUTSIDE* (**1**) and *FRESH AIR FROM OUTSIDE* (**2**) oval ports on the top of the unit.
Be careful to connect the right insulated duct to its corresponding port.

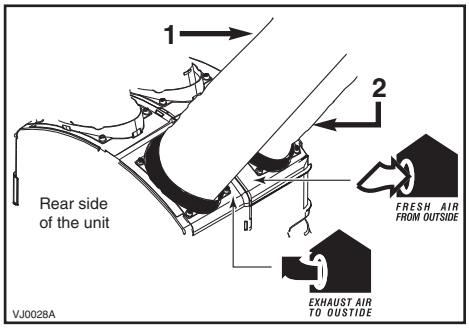

1) Red dot duct
2) Blue dot duct

6. INSTALL THE UNIT (CONT'D)

6.10 Connecting the Drain (GSHH3K Model only)

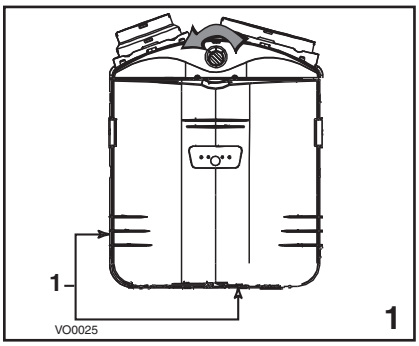

1. Open the door by turning the switch knob to the OFF position (to unlock the door). Then, unlatch the door and open it. Slide out the core assembly to access the 2 drain fitting hole locations (**1**). Punch out the holes.

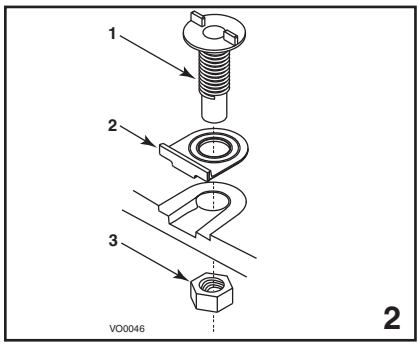

2. Hand tighten the 2 plastic drain fittings (**1**) using the gaskets (**2**) and nuts (**3**) as shown. Close the door.

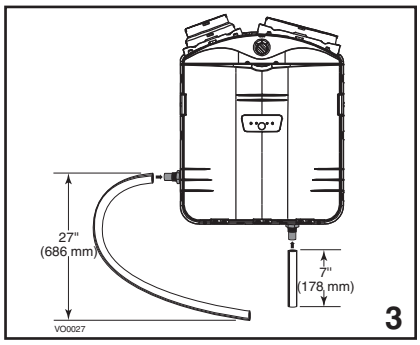

3. Cut 2 sections of plastic tubing; one 7" (178 mm) long and one 27" (686 mm) long, and attach them to each drain fitting as shown.

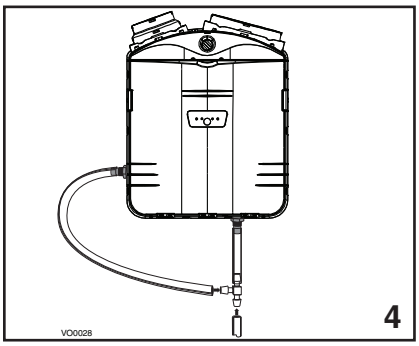

4. Join these 2 sections to the "T" junction and main tube as shown.

5. Make a water trap loop in the tube to prevent the unit from drawing unpleasant odors from the drain source. Make sure this loop is situated BELOW the "T" as shown. This will prevent water from being drawn back up into the unit in case of negative pressure. Run the tube to the floor drain or an alternative drain pipe or pail. Be sure there is a slight slope for the run-off.

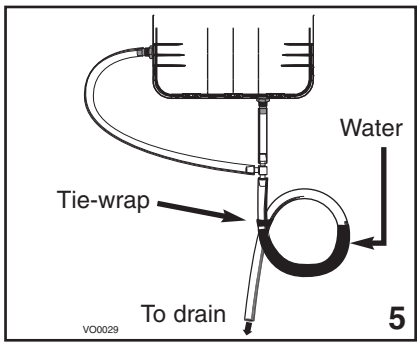

6.11 Low Temperature Applications Below Freezing (32°F or 0°C)

ALL MODELS

CAUTION

When the ambient temperature surrounding the unit falls below freezing (32°F or 0°C), all units must run continuously to prevent condensation.

FOR GSHH3K HEAT RECOVERY AND GSEH3K ENERGY RECOVERY MODELS ONLY

CAUTION

- **When installing an GSHH3K HEPA Filtration, Fresh Air and Heat Recovery model, make sure the unit cabinet and its drain line are protected from freezing.**
- **When installing an GSHH3K HEPA Filtration, Fresh Air and Heat Recovery model, install a drip pan if required by local code.**

GENERAL:

- Insulate the cabinet body using a 2" thick blanket insulation or by placing the unit in an insulated enclosure formed from 2" thick fiberglass insulation board.
- Make sure that all ductwork is insulated.
- Carefully seal all of the unit ports with duct tape to prevent air leakage.
- Install a heating cable along the drain line for freeze protection.
  - Use a UL listed heat tape in accordance to the manufacturer's instruction.
  - Because of the additional weight of the heating tape on drain line, secure the plastic tubing to each drain fitting using hose clamps (not provided).
  - Make sure the heat tape is rated between 3 to 6 watts per foot at 120 V.
  - Protect the circuit the heat tape is connected to with a ground-fault circuit breaker.
  - Cover the drain line and heating cable with 1/2 inch thick insulation.
  - If you need to extend the drain line beyond the 9 foot length supplied with the unit, use copper pipe.

6. INSTALL THE UNIT (CONT'D)

6.11 Low Temperature Applications Below Freezing (32°F or 0°C) (cont'd)

6.11.1 Blanket Insulation

If fabricating an insulation blanket, use a 2" thick hot water heater blanket cut as shown.

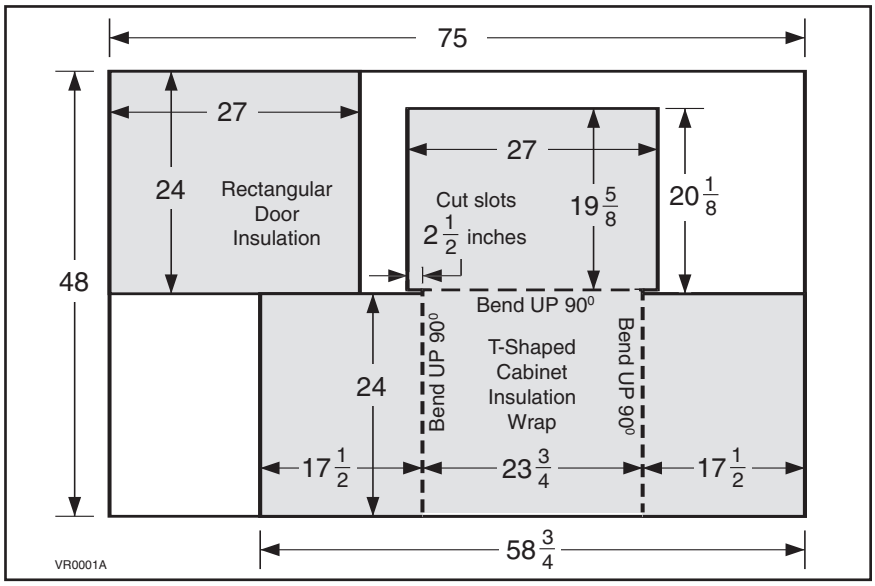

Wrap the unit as shown. Make sure that all joints are fully sealed to prevent cold air penetration between the insulation and the unit.

NOTES: 1. Holes must be done in the insulation blanket to allow drain line installation for model GSHH3K only.
2. **MAKE SURE** to use excess insulation to cover the top of unit and its ports.

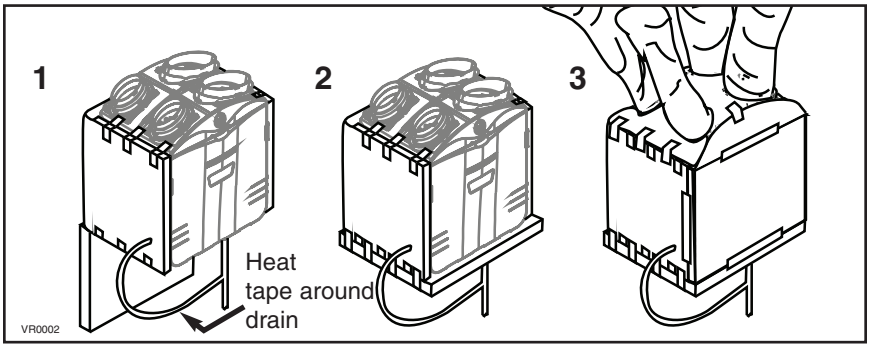

6.11.2 Duct Board Insulated enclosure

If fabricating an enclosure from 2" fiberglass duct board, make sure that the enclosure is thightly sealed.

When possible have the waste disposal point within the confines of the enclosure to expedite water removal (for GSHH3K model only).

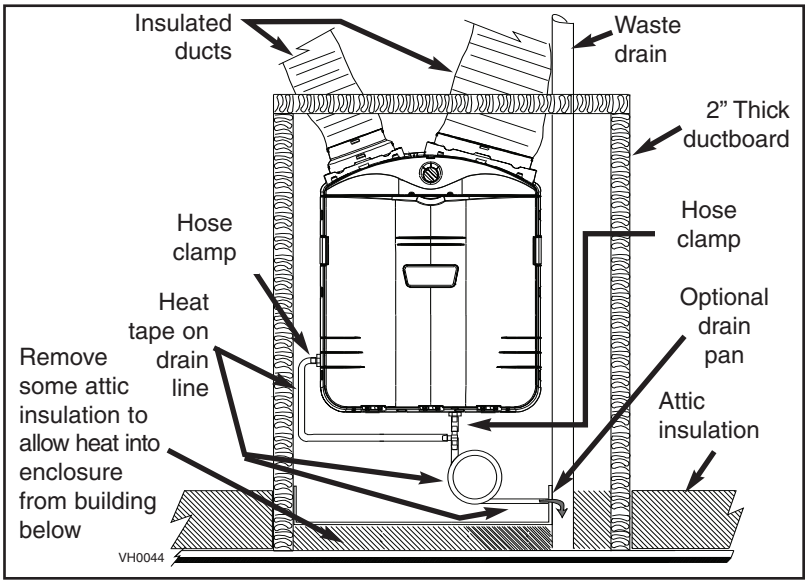

Cut away view with the duct board enclosure door removed.

7. CONTROLS

7.1 Main Switch

All units are equipped with a 3-position main switch, located on the front panel. The unit is intented for use with a wall controller (provided, see below). The main switch is to remain in either the “OFF” or “Normal/Remote” modes ONLY. The “Normal/Remote” mode allows the homeowner to operate the product from the wall controller, typically mounted near a thermostat or other convenient location.

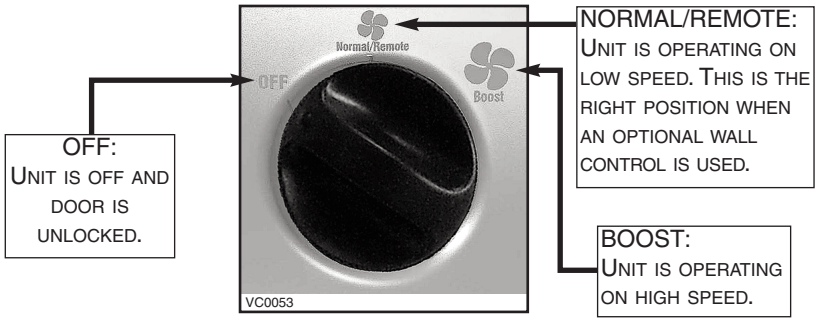

7.2 Wall Controllers (one provided with the unit)

There are two wall controllers available: ACCGSC1 control (intended for GSFH1K and GSVH1K models only) and 40425 control (intended for GSHH3K and GSEH3K models only).

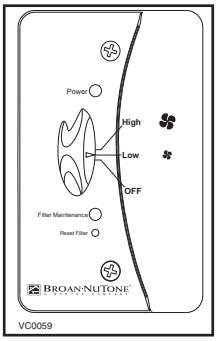

ACCGSC1
CONTROLLER

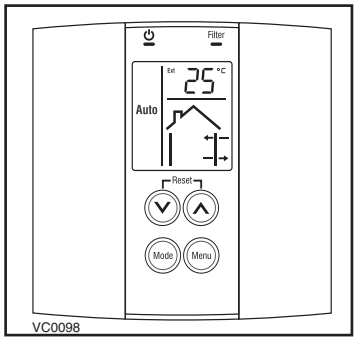

40425
CONTROLLER

7. CONTROLS (CONT'D)

7.3 INSTALLATION OF THE ACCGSC1 WALL CONTROLLER

⚠ WARNING

Always disconnect the unit before making any connections. Failure in disconnecting power could result in electrical shock or damage of the wall control or electronic module inside the unit.

CAUTION

Never install more than one optional wall controller per unit.

1. Determine the more convenient location for the control.

2. Remove the controller cover plate (**1**). If you prefer to have your main control mounted on an approved outlet box or an approved mounting bracket (not included), discard the backplate (**2**).

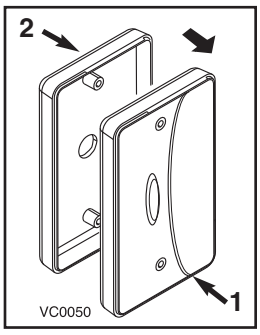

CAUTION

Keep control low voltage wiring at least 1' (305 mm) away from motors, lighting ballast, light dimming circuit and power distribution panel. Do not route control wiring along house power wiring. Avoid poor wiring connections. Failure to follow these practices can introduce electrical interference, which can cause erratic control operations.

3. Route the control cable from the unit to the wall controller.
Use the provided cable (4-conductor, 24-gauge, Solid, UL Listed, CM type, 40' long).
NOTE: For wall controller efficiency, the maximum wire length is 100' (30.5 m). If needed, add another length of same wire type. Use caution not to cross the wire colors or create any short.

⚠ WARNING

To avoid risk of electrical shocks, never install another wire in the same electrical box than the one for the wall controller.

4. Take one end of the provided cable and pass it through the wall control backplate (or outlet box or mounting bracket).

5. Splice back this end of the cable to access to the four wires. Remove the insulated sleeve of each wire ends. Make a loop with each bare end wire to hook them to their corresponding screw. Connect YELLOW wire to "Y" screw, RED wire to "R" screw, GREEN to "G" screw and BLACK to "B" screw. See illustration beside.

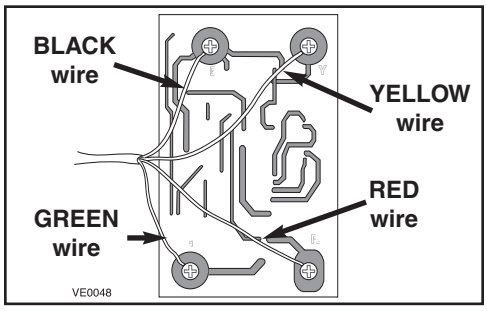

⚠ WARNING

Make sure that the wires do not short circuit between themselves or by touching any other components on the wall controller.

6. Reinstall the cover plate. Using provided wall anchors and provided screws, mount the wall controller on the wall. Use only 2 screws to mount on outlet box. See illustrations below. Once done, go to Section 7.5 *Wall Controllers Connection to the Unit.*

RECESS MOUNT

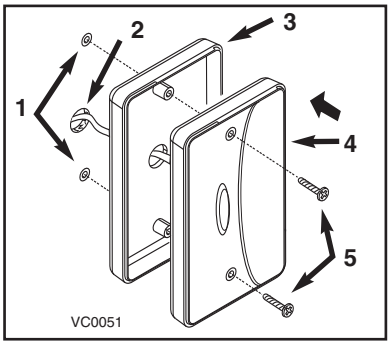

1) Wall anchors
2) Control cable
3) Backplate
4) Control
5) Screws

SURFACE MOUNT

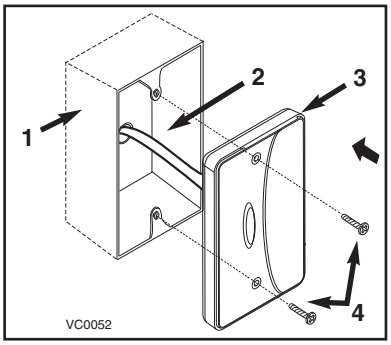

1) Outlet box
2) Control cable
3) Control
4) Screws

7. CONTROLS (CONT'D)

7.4 INSTALLATION OF THE 40425 WALL CONTROLLER

⚠ WARNING

Always disconnect the unit before making any connections. Failure in disconnecting power could result in electrical shock or damage of the wall control or electronic module inside the unit.

CAUTION

Failure to comply with the following can cause erratic operation of the unit:

- **Never install more than one optional wall controller per unit.**
- **Keep control low voltage wiring at least 1foot (305 mm) away from motors, lighting ballast, light dimming circuit and power distribution panel. Do not route control wiring alongside house power wiring.**
- **Ensure the wires are securely connected.**
- **Disconnect power from the unit before removing the wall controller faceplate from its mounting plate.**

1. Route the cable from the unit to a convenient location for the wall control.

2. Loosen the locking screw (the screw cannot be completely removed).

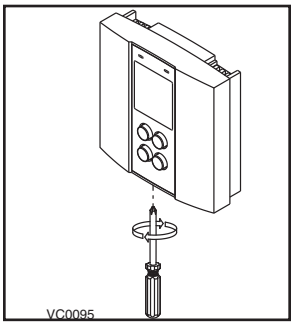

3. Detach the faceplate from the mounting plate by pulling the bottom part. If necessary, bore the mounting holes and insert anchors.

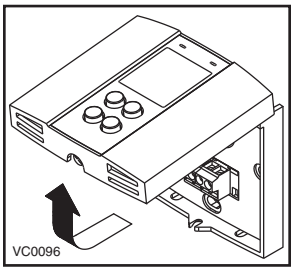

4. Pass the cable (4 wires) through the opening of the mounting plate and mount the plate to the wall using the provided screws.

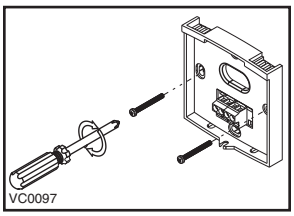

5. Splice back the end of the cable to access to the 4 wires. Strip the end of each wire. Connect each wire to its corresponding terminal: YELLOW wire to "Y", RED wire to "R", GREEN to "G" and BLACK to "B". See illustration beside.

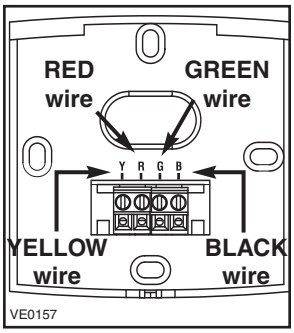

6. Reinstall the front module onto the back plate and tighten the locking screw.

7. CONTROLS (CONT'D)

7.5 WALL CONTROLLERS CONNECTION TO THE UNIT (BOTH MODELS)

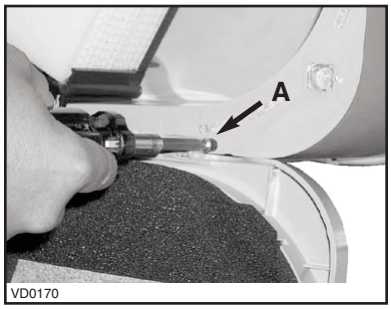

VD0170

1. Go to the unit. Turn the unit switch knob to OFF position in order to unlock the door. Unlatch the door and open it. If required, the door can be removed. To do so, remove the stopper (**A**) located on the right side of the door hinge. Then, hold the door and hit with your palm its left side. Slide the door to the right to disengage it from the unit.

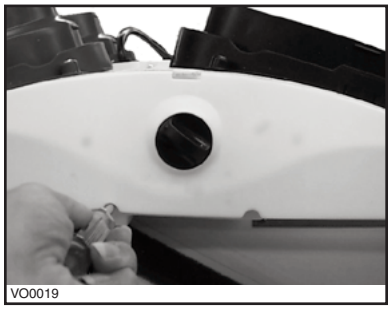
VO0019

2. Using a screwdriver, remove both front plate retaining screws and carefully remove the front plate of the unit.

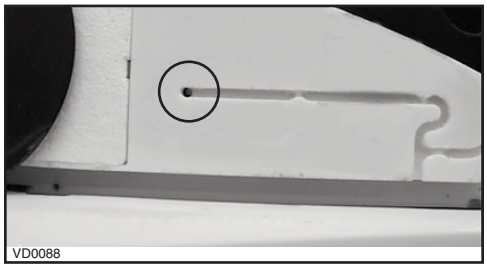
VD0088

3. Using a small rod, pierce a hole through the unit at the end of the wire channel. (See photo beside). Splice back the end of the cable to access the 4 wires. Remove the insulated sleeve of each wire ends. Insert the end of the cable through the unit, using the small hole previously done. From the top right hole of the unit, pull on the wire.

CAUTION

Never use a drill to pierce the hole through the unit, since electrical component inside the unit may be damaged.

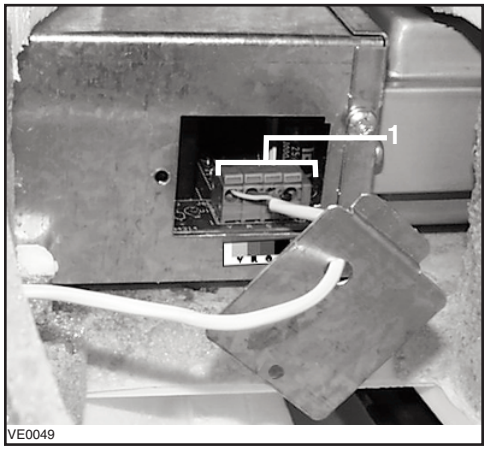

VE0049

4. In order to access the unit PCB terminals, remove the side door located on the electrical box and punch out its knockout. Run the cable through the knock-out hole and connect each wire in their corresponding terminal (YELLOW in "Y", RED in "R", GREEN in "G" and BLACK in "B").
NOTE: Push forward slightly on the little tabs (**1**) to ease insertion of each wire. See photo beside.

5. Reinstall the side door on the electrical box and install the 8" oval port on the unit.

VD0089

6. Route the wire through its channel and reinstall the front panel on the unit. See picture beside.

7. Plug the unit to the wall outlet.

NOTE: When using the wall controller, the main switch on the unit must always be positioned to NORMAL/REMOTE.

7. CONTROLS (CONT'D)

7.6 Operating ACCGSC1 Controller

7.6.1 ACCGSC1 Controller Description

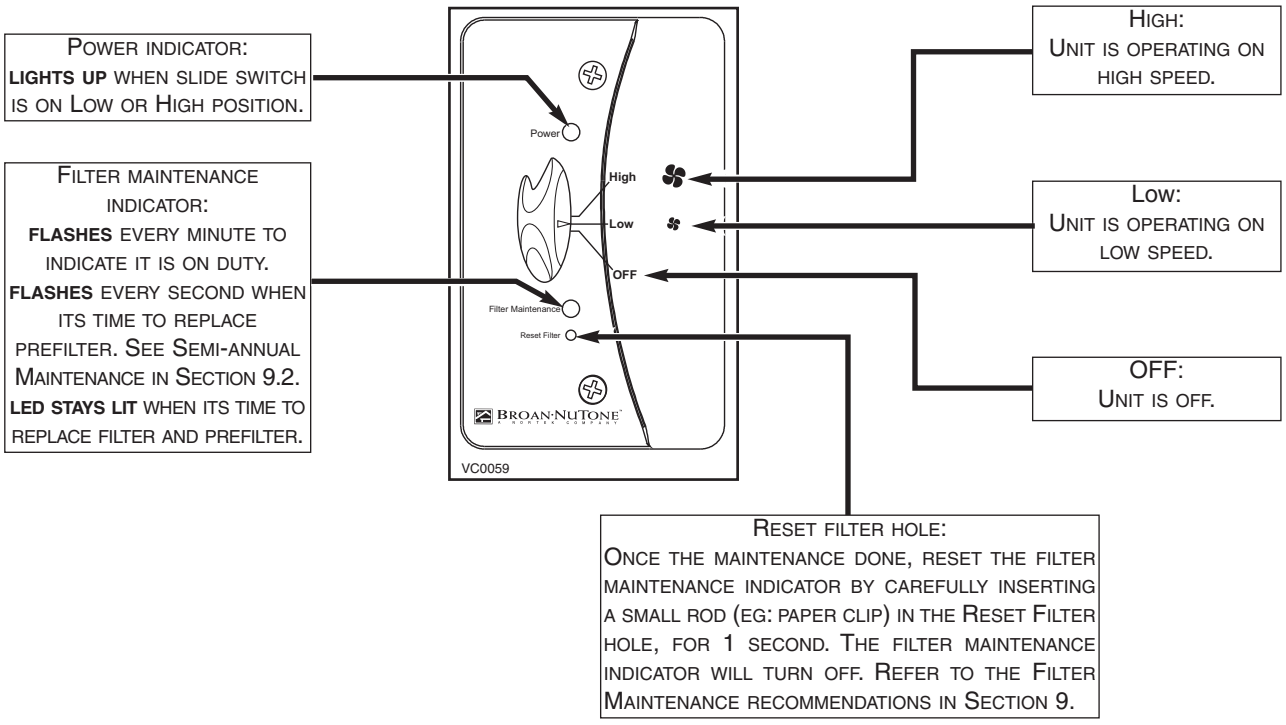

7.6.2 Using ACCGSC1 Controller

- OFF: To stop the unit, slide the button on this position.
- Low: For a day-to-day usage, slide the button on this position.
  The unit then will operate on low speed, providing 70 cfm.
- High: For a high speed operation, slide the button on this position.
  Generally used when more ventilation is required, such as parties, smokers, or for a 6-bedroom house.
  This mode provides 105 cfm.

7.7 Operating 40425 Controller

7.7.1 ACCGSC3 Controller Description

This wall controller is in OFF mode when power is applied for the first time. The mode does not change following a power failure.

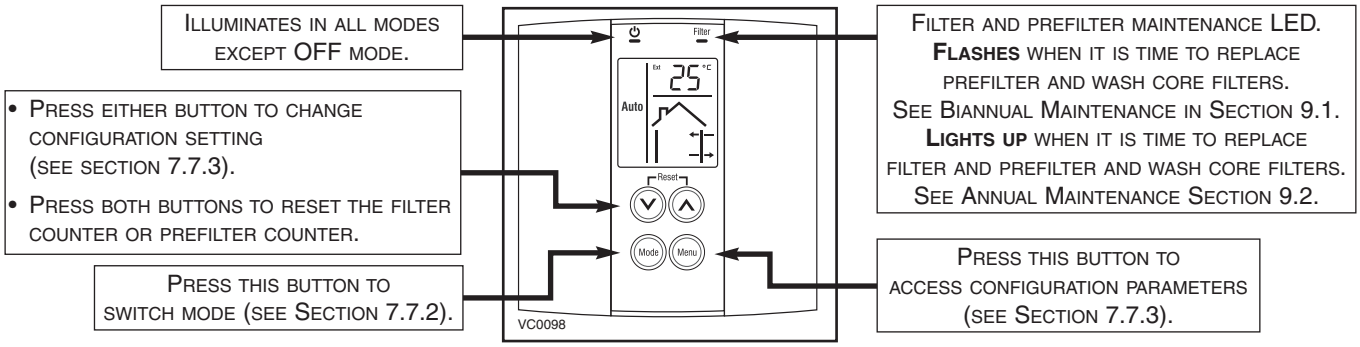

7. CONTROLS (CONT'D)

7.7 OPERATING 40425 CONTROLLER (CONT'D)

7.7.2 OPERATING 40425 CONTROLLER

The wall controls 40415 and 40425 provide 5 operation modes. Press the **Mode** button to select the desired mode.

NORMAL MODE (MIN)

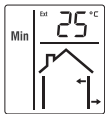

The unit exchanges air at normal speed. The outdoor temperature* is displayed.

BOOST MODE (MAX)

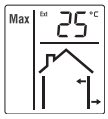

The unit exchanges air at high speed. The outdoor temperature* is displayed.

RECIRCULATION MODE (RE-CIRC)

The unit recirculates air. However, every hour, the unit exchanges air for 6 minutes so that it can obtain a reading of the outdoor temperature*.

OFF MODE

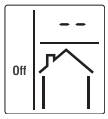

The unit is off. The outdoor temperature* is not displayed.

AUTOMATIC MODE (AUTO)

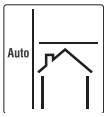

Off in Auto mode

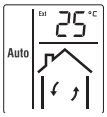

Air recirculation in Auto mode

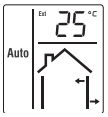

Air exchange in Auto mode

The unit operates on a 60-minute cycle. For the first 40 minutes, the unit recirculates air or is off (See configuration parameter 2). For the last 20 minutes, it exchanges air. However, if the outdoor temperature* is too high or too low (see configuration parameters 3 and 4), the unit recirculates air during the last 20 minutes.

* The outdoor temperature reading is taken from the unit *FRESH AIR FROM OUTSIDE* port; due to the lenght of the insulated duct, the reading is slightly different from the real outside temperature.

7.7.3 40425 WALL CONTROLLER CONFIGURATION

See the configuration table below for the list of configuration parameters.
Press the **Menu** button for 3 seconds to enter or exit the configuration menu.
NOTE: The wall control automatically saves any changes and exits the configuration menu if no button is pressed within the next 60 seconds.

Press the **Menu** button briefly to advance to the next parameter (menu number).

Press the ⌄ or ⌃ button to change the parameters setting.

CONFIGURATION TABLE

MENU NUMBER	PARAMETER	OPTIONS	DEFAULT SETTING	DESCRIPTION
1	TEMPERATURE FORMAT	°C / °F	°C	SELECTS BETWEEN °C AND °F DISPLAY.
2	AUTO MODE OPERATION	RE / OF	RE	SELECTS BETWEEN AIR RECIRCULATION (RE) AND OFF (OF) (SEE SECTION 7.7.2).
3	AUTO MODE LOW TEMPERATURE LIMIT	-30°C TO 0°C (-22°F TO 32°F)	-25°C (-13°F)	PREVENTS AIR EXCHANGE IN AUTO MODE IF THE OUTDOOR TEMPERATURE IS TOO LOW (SEE SECTION 7.7.2).
4	AUTO MODE HIGH TEMPERATURE LIMIT	0°C TO 30°C (32°F TO 86°F)	27°C (81°F)	PREVENTS AIR EXCHANGE IN AUTO MODE IF THE OUTDOOR TEMPERATURE IS TOO HIGH (SEE SECTION 7.7.2).
5	BACKLIGHT MODE	AU / ON	AU	AU: THE SCREEN ILLUMINATES FOR 12 SECONDS WHEN ANY KEY IS PRESSED ON: THE SCREEN IS PERMANENTLY ILLUMINATED.

8. BALANCING PROCEDURE (GSVH1K, GSHH3K AND GSEH3K UNITS ONLY)

All units are prebalanced. However, if your construction code requires to balance the unit, follow this procedure.

8.1 What You Need to Balance the Unit

- A magnehelic gauge capable of measuring 0 to 0.5 inches water gauge (0 to 125 Pa) and 2 plastic tubes.
- Two flow collars (the size will vary depending of duct diameter).

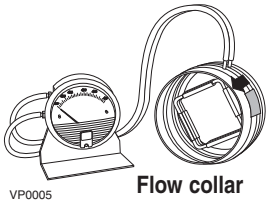

Flow collar

8.2 Preliminary Stages for Balancing the Unit

Seal all the unit ductwork with tape. Close all windows and doors. Turn off all exhaust devices such as: range hoods, dryers and bathroom fans. Make sure balancing dampers are fully open (F and G in figure below).
Choose an appropriate location for the 2 flow collars according to figure below:

- On the exhaust air duct (first measuring location, A)
- On the fresh/filtered air distribution duct (second measuring location, B)
- At least 36" (914 mm) away from the unit; at least 12" (304 mm) before or after 90° elbow and at least 12" (304 mm) away from a register.
- At least 12" (304 mm) away a from a balancing damper (F and G in figure below).

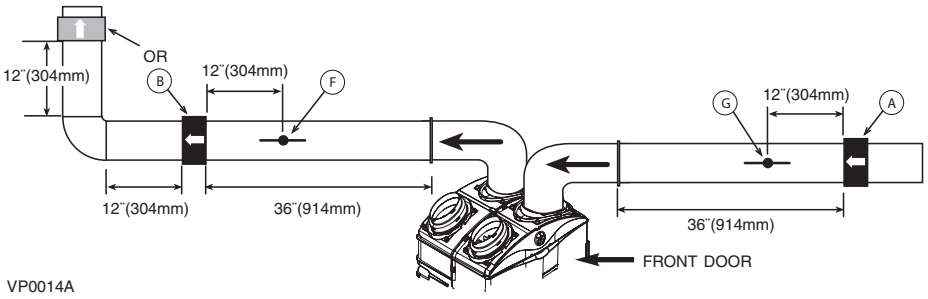

8.3 Installation of Flow Collar

Insert the flow collars in the ducts at each location (A et B on figure above). Make sure their arrows are pointing in the direction of the airflow. Tape collars in place temporarily.

8.4 Balancing Procedure

1. Set the unit to high speed.
   Make sure that the furnace blower is ON if the installation is in any way connected to the ductwork of the cold air return. If not leave furnace blower OFF.
2. Place the magnehelic gauge on a level surface and adjust it to zero.
3. Connect tubing from gauge to flow collar in exhaust air stream (location A in illustration above). Be sure to connect the tubes to their appropriate high / low fitting. If the gauge reading drops to below zero, reverse the tubing connections.
   NOTE: It is better to start with the exhaust air flow reading because the exhaust typically has more restriction than the fresh air, especially in cases of stand alone and central draw point installations.
   Hold or place the magnehelic gauge upright and level. Record the reading.

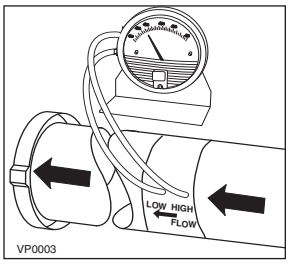

4. Move tubing to the other side of the unit (location B in illustration above and note reading. Adjust the fresh air balancing damper F until the reading at B is approximately the same as the reading at A. If the reading at B is less than the reading at A then go back and adjust the exhaust balancing damper G to equal the fresh air flow.

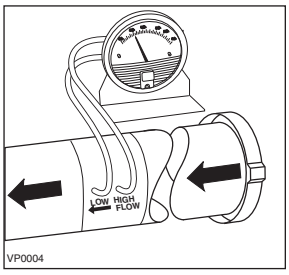

5. Remove flow collars and reconnect the duct, then, seal with duct tape. Write the required airflow information on a label and stick it near the unit for future reference: (date, maximum speed airflows, your name and phone number and business address).

   NOTES: 1. Most flow collar kits provide a conversion chart situated on the collar which enables you to convert magnehelic gauge readings to equivalent cfm values.
   2. A difference of ± 10 cfm (± 0.015 inches water gauge) between the 2 readings is considered balanced.
   3. If you are using only one flow collar, then, after completing the first reading, transfer this measuring device to the other side of the unit and take the second reading.

9. MAINTENANCE

⚠ WARNING

Risk of electrical shocks. Before performing any maintenance or servicing, always disconnect the unit from its power source.

9.1 Semi-annual Maintenance (essential)

Your wall controller (ACCGSC1 or 40425) tells you when to perform this maintenance when the **Filter Maintenance light is flashing**. Otherwise, maintenance should be performed every 6 months to ensure your unit proper operation for years to come. Follow these steps:

1. Turn switch knob to OFF to unlock the door.

2. Unlatch the door and open it. If required, the door can be removed. To do so, remove the stopper (**A**) located on the right side of the door hinge. Then, hold the door and hit with your palm its left side. Slide the door to the right to disengage it from the unit. Clean the inner side of the door with a clean damp cloth, then wipe with a dry one.

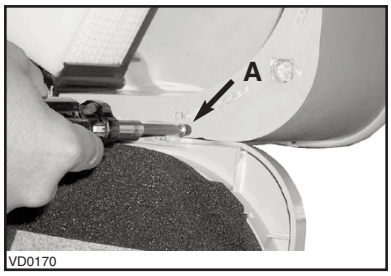

3. Slide out the air diffuser (model GSVH1K), the heat recovery module (model GSHH3K only), the energy recovery module (model GSEH3K only) and the filter cartridge from the unit.
NOTES: 1. On model GSVH1K only, never grab the white shaft (item **2**) to pull out the air diffuser.
2. To remove the filter cartridge, pull on its tabs.

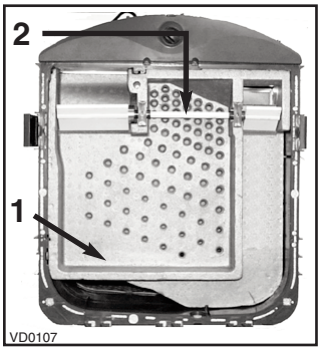

1) Air Diffuser
2) White shaft

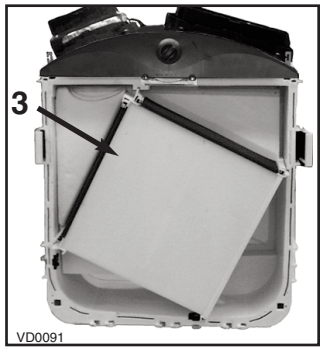

3) Heat recovery core

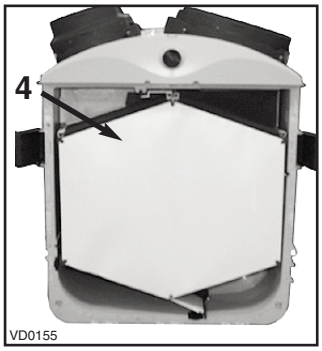

4) Energy recovery core

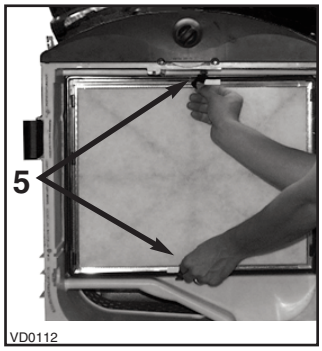

5) Filter cartridge tabs

4. Using your thumbs, push on the prefilter side to disengage it from the filter cartridge. Then, slide it out of the filter cartridge and discard it. Install the new prefilter by reversing this operation.

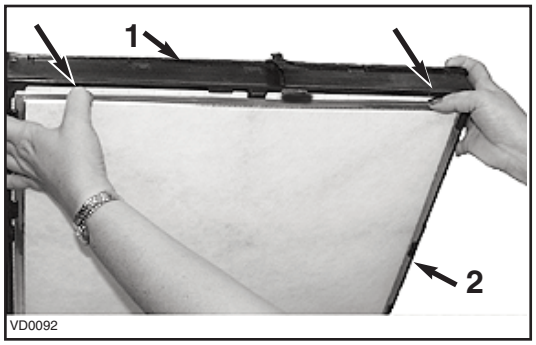

1) Filter cartridge
2) Prefilter

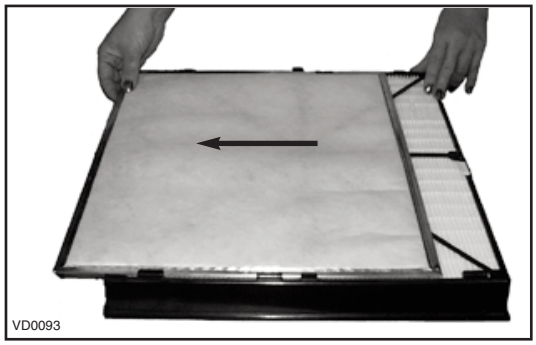

5. Clean the inside walls of the unit with a clean damp cloth, then wipe with a dry one. Reinstall the filter cartridge.

6.1 <u>For HEPA Filtration and Fresh Air Ventilation model GSVH1K only</u>

Clean the air diffuser with a clean damp cloth, then wipe with a dry one. Once the air diffuser completely dry, slide it back into the unit.

9. MAINTENANCE (CONT'D)

9.1 SEMI-ANNUAL MAINTENANCE (ESSENTIAL) (CONT'D)

6.2 For HEPA Filtration, Fresh Air and Heat Recovery model GSHH3K only

Slide out the two core filters (item **1**) from the heat recovery core and wash them under hot water with mild soap.
Remove the dust on the heat recovery core (item **2**) using a vacuum cleaner with a soft brush attachment.
Rinse the core filters thoroughly and let dry before reinstalling them on the heat recovery core.
Reinstall the heat recovery core in the unit.

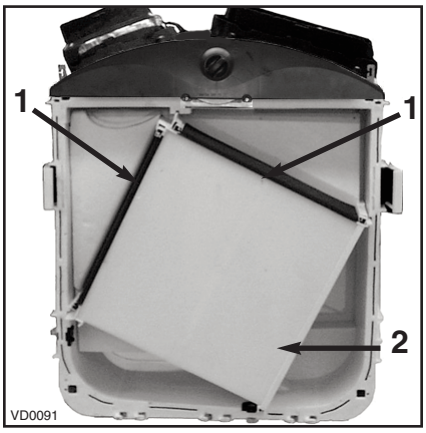

1) Core filters
2) Heat Recovery Core

NOTE: Make sure the damper spring (**1**) is still inside the left front port opening before reinstalling the heat recovery module.

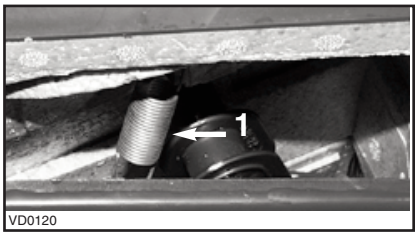

1) Damper spring

6.3 For HEPA Filtration, Fresh Air and Energy Recovery model GSEH3K only

CAUTION

The energy recovery core cannot be washed with water.

Slide out the two core filters (item **1**) from the energy recovery core and wash them under hot water with mild soap.
Remove the dust on the energy recovery core (item **2**) using a vacuum cleaner with a soft brush attachment.
Rinse the core filters thoroughly and let dry before reinstalling them on the energy recovery core.
Reinstall the energy recovery core in the unit.

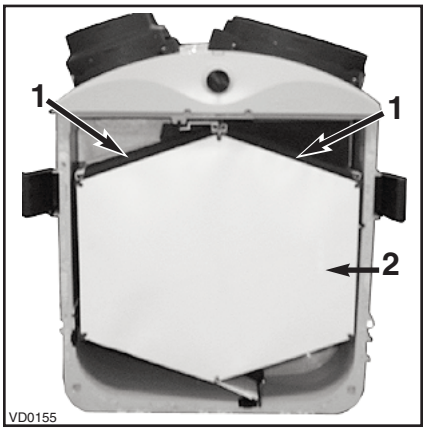

1) Core filters
2) Energy Recovery Core

NOTE: Make sure the damper spring (**1**) is still inside the left front port opening before reinstalling the energy recovery module.

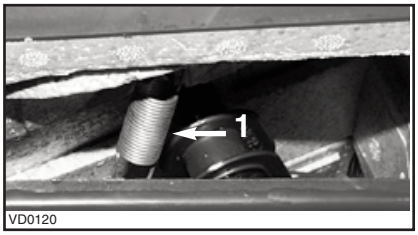

1) Damper spring

7. If removed, reinstall the door. Close the latches and turn ON the switch knob to its previous position.

8. Your unit is equipped with a wall controller (ACCGSC1 or 40425). For ACCGSC1, reset the filter maintenance indicator by inserting a small rod (eg: paper clip end) into the reset filter hole of the wall control. Press lightly until the Filter Maintenance indicator light turns off. For 40425, to reset the counter and turn the LED off, simultaneoustly press both ⌄ and ⌃ buttons for 1 second.

9. MAINTENANCE (CONT'D)

9.2 Annual Maintenance (essential)

Your unit is equipped with a wall controller (ACCGSC1 or 40425), which tells when to perform maintenance when the **Filter Maintenance light stays ON**. Otherwise, this maintenance must be performed once a year to ensure your unit proper operation for years to come. Proceed as the Semi-annual Maintenance (Section 9.1), but instead of replacing the prefilter (point 4), discard the complete HEPA Filter cartridge (including prefilter). Install a new HEPA filter cartridge with a new prefilter on it.

NOTE: In annual maintenance, for 40425 wall controller, press simultaneoustly both ⌄ and ⌃ buttons for 5 seconds to reset the counter and turn the LED off.

9.3 Optional Alpine/pine Filter (part number: ACCGSUP5)

During pollen season, or as needed, remove the assembled hood from its backplate by removing its 2 retaining screws.

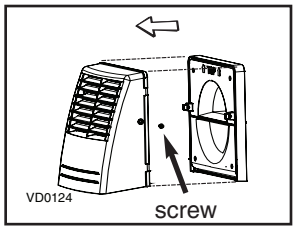

Then, slide out the optional Alpine/pine filter and clean it under water. Let dry before reinstalling it on the assembled hood. Reinstall the hood on its backplate.

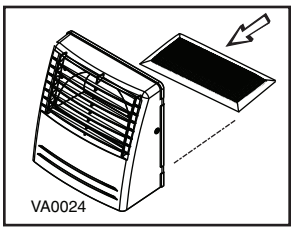

10.TROUBLESHOOTING

PROBLEMS	SOLUTIONS
1.Unit does not start at Low or High position.	• Check breaker or fuse in main distribution panel or GFI outlet. • Check there is 120V at the electrical outlet. • Make sure the unit main switch is properly set in Normal or Boost position. • If a wall control (ACCGSC1 or 40425) is connected, disconnect control wire from the unit, then make sure the unit main switch is properly set in Normal/Remote or Boost position. • Check the fuse on electronic board. If blown, replace with the same type.
2.Unit does not run at Low speed, but runs at High.	• If a wall control (ACCGSC1 or 40425) is used, disconnect control wire from the unit. Then, if the unit runs at Normal speed, check control wiring and wall control connections.
3.Unit is not operating as per the selected mode.	• Check if the unit main switch is in "Normal/Remote" position. • Check wall control wiring.
4.Wall control indicators do not work properly or not at all.	• Check wall control wiring.
5.On 40425 wall controller only, 1 or 2 light indicators are flashing every second.	• Check if the unit main switch is in "Normal/Remote" position. • Check wall control wiring.
6.On 40425 wall controller only, wall controller screen indicates E1.	• Check wall controller wiring.
7.On 40425 wall controller only, wall controller screen indicates E2.	• The temperature sensor is defective. (The unit will automatically switch to OFF mode if this happens.)

If the problem is still not solved, call your installer or the nearest approved Service Center.
Also, you can reach the Customer Service Departments or Technical Supports listed below.

Broan-NuTone LLC

- Customer Service Department:
  Telephone: 1-800-558-1711
  Fax: 1-800-356-5862
- Technical Support:
  Telephone: 1-800-637-1453
  Fax: 1-262-673-8709