This Owner's Manual is provided and hosted by Appliance Factory Parts.

Appliance Factory Parts
Experts in BBQ, Humidifier, & Appliance Parts
1-800-955-7075

LG 79002
Owner's Manual

Shop genuine replacement parts for LG 79002

* The color vary in each model

Find Your LG Refrigerator Parts - Select From 834 Models

-------- Manual continues below --------

BOTTOM FREEZER REFRIGERATOR
Use & Care Guide

REFRIGERADOR CON CONGELADOR INFERIOR
Guía para el Uso y Cuidado

CONGÉLATEUR INFÉRIEUR RÉFRIGÉRATEUR
Guide d'Utilisation et d'Entretien

Models / Modelos / Modèles

795.6900★ 795.7620★
795.7900★ 795.6827★
795.7809★ 795.7827★

★ = color number

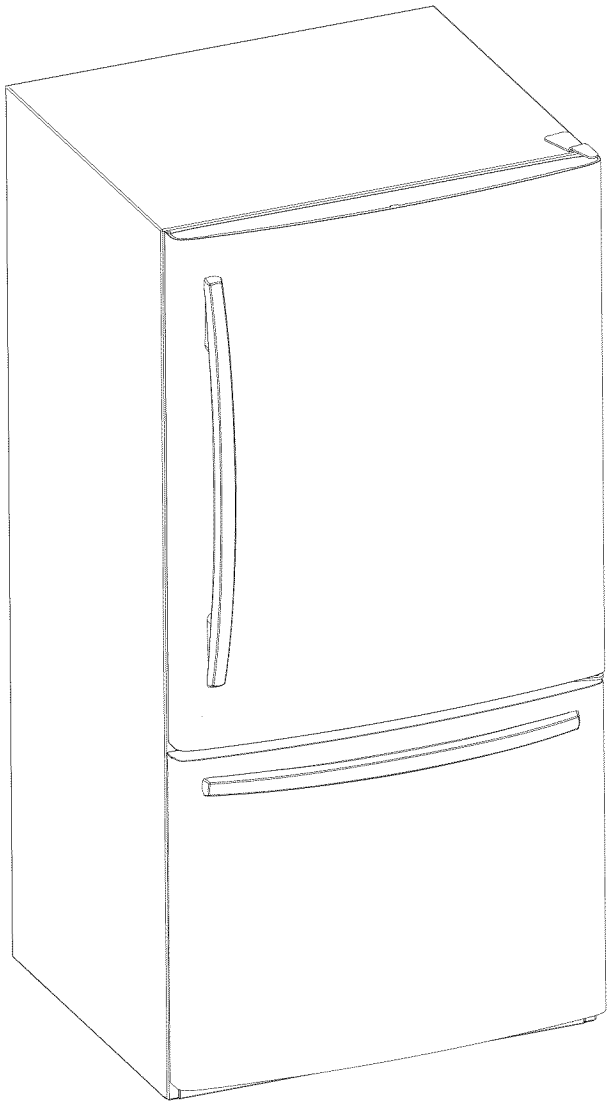

ENGLISH ESPAÑOL FRANÇAIS

MFL63283801
Printed in Mexico

Sears Brands Management Corporation, Hoffman Estates, IL 60179 U.S.A. **www.sears.com**

TABLE OF CONTENTS

English Version **2**
Spanish Version **41**
French Version **81**
Warranty and Product Record 3 - 4
Safety Instructions 5 - 6
Grounding Requirements 6
Parts and Features 7 - 8
Refrigerator Installation 9 - 21
Unpacking Your Refrigerator 9
Installation 9
Base Grille 9
Removing Reversing and Replacing Doors
For Drawer Models 10-15
For Swing Models 16-21
Door Closing and Alignment 21
Using Your Refrigerator 22 - 30
Ensuring Proper Air Circulation 22
Multi Flow 22
Door Alarm 22
Setting the Controls 22 - 23
Adjusting Control Settings 23
Food Storage Guide 24
Storing Frozen Food 24
Refrigerator Shelves 25
Refrigerator Features for Drawer Type Models 26
Refrigerator Features for Swing Type Models 27
Door Racks 26
Door Bins 26
Dairy Bin 27
Ice Bin 27
DuraBase 27
DuraBase Divider 27
Guide-Out Drawer Basket 30
Tilting Door 30
Wire Durabase 30
Frezzer Shelf 30
Care and Cleaning 31 - 32
General Cleaning Tips 31
Outside 31
Inside Walls 31
Door Liner and Gaskets 31
Plastic Parts 31
Condenser Coils 31
Light Bulb Replacement 32
Power Interruptions 32
When you go on vacation 32
When you move 32
About the Icemaker 33
Connecting the Water Line 34 - 36
Troubleshooting Guide 37 - 40

BOTTOM FREEZER REFRIGERATOR

Kenmore Appliance Warranty

One Year Limited Warranty
When installed, operated and maintained according to all instructions supplied with the product, if this appliance fails due to a defect in material or workmanship within one year from the date of purchase, call 1-800-4-MY-HOME to arrange for free repair.
If this appliance is used for other than private family purposes, this warranty applies for only 90 days from the date of purchase.

This Warranty covers only defects in material and workmanship. Sears will NOT pay for:
1. Expendable items that can wear out from normal use, including but not limited to filters, belts, light bulbs, and bags.
2. A service technician to instruct the user in correct product installation, operation or maintenance.
3. A service technician to clean or maintain this product.
4. Damage to or failure of this product if it is not installed, operated or maintained according to all instructions supplied with the product.
5. Damage to or failure of this product resulting from accident, abuse, misuse or use for other than its intended purpose.
6. Damage to or failure of this product caused by the use of detergents, cleaners, chemicals or utensils other than those recommended in all instructions supplied with the product.
7. Damage to or failure of parts or systems resulting from unauthorized modifications made to this product.

Disclaimer of implied warranties; limitation of remedies
Customer's sole and exclusive remedy under this limited warranty shall be product repair as provided herein. Implied warranties, including warranties of merchantability or fitness for a particular purpose, are limited to one year or the shortest period allowed by law. Sears shall not be liable for incidental or consequential damages. Some states and provinces do not allow the exclusion or limitation of incidental or consequential damages, or limitations on the duration of implied warranties of merchantability or fitness, so these exclusions or limitations may not apply to you.

This warranty applies only while this appliance is used in the United States and Canada.
This warranty gives you specific legal rights, and you may also have other rights which vary from state to state.

Sears Roebuck and Co., Hoffman Estates, IL 60179
Sears Canada, Inc., Toronto, Ontario, Canada M5B 2B8

PROTECTION AGREEMENTS

Master Protection Agreements

Congratulations on making a smart purchase. Your new Kenmore® product is designed and manufactured for years of dependable operation. But like all products, it may require preventive maintenance or repair from time to time. That's when having a Master Protection Agreement can save you money and aggravation.

The Master Protection Agreement also helps extend the life of your new product. Here's what the Agreement* includes:

- ☑ **Parts and labor** needed to help keep products operating properly **under normal use**, not just defects. Our coverage goes **well beyond the product warranty.** No deductibles, no functional failure excluded from coverage **- real protection.**
- ☑ **Expert service** by a force of more than 10,000 authorized **Sears service technicians**, which means someone you can trust will be working on your product.
- ☑ **Unlimited service calls and nationwide service,** as often as you want us, whenever you want us.
- ☑ **"No-lemon" guarantee** - replacement of your covered product if four or more product failures occur within twelve months.
- ☑ **Product replacement** if your covered product can't be Fixed.
- ☑ **Annual Preventive Maintenance Check** at your Request **-** no extra charge.
- ☑ **Fast help by phone -** we call it **Rapid Resolution -** phone support from a Sears representative on all products. Think of us as a "talking owner's manual."
- ☑ **Power surge protection** against electrical damage due to power fluctuations.
- ☑ **$250 Food Loss Protection** annually for any food spoilage that is the result of mechanical failure of any covered refrigerator or freezer.
- ☑ **Rental reimbursement** if repair of your covered product takes longer than promised.
- ☑ **10% discount** off the regular price of any non-covered repair service and related installed parts.

Once you purchase the Agreement, a simple phone call is all that it takes for you to schedule service. You can call anytime day or night, or schedule a service appointment online.

The Master Protection Agreement is a risk free purchase. If you cancel for any reason during the product warranty period, we will provide a full refund. Or a prorated refund anytime after the product warranty period expires. Purchase your Master Protection Agreement today!

Some limitations and exclusions apply. For prices and additional information in the U.S.A. call 1-800-827-6655.

***Coverage in Canada varies on some items. For full details call Sears Canada at 1-800-361-6655.**

Sears Installation Service
For Sears professional installation of home appliances, garage door openers, water heaters, and other major home items, in the U.S.A. or Canada call **1-800-4-MY-HOME®.**

PRODUCT RECORD

In the space below, record the date of purchase, model and serial number of your product. You will find the model and serial number printed on an identification label located on the right-hand side of the refrigerator compartment. Have these items of information available whenever you contact Sears concerning your product.

Model No. _____ Date of Purchase _____

Serial No. _____ Dealer _____

Save these instructions and attach your sales receipt for future reference.

IMPORTANT SAFETY INSTRUCTIONS

SAFETY MESSAGES

This guide contains many important safety messages. Always **read and obey** all safety messages.

This is the safety alert symbol. It alerts you to safety messages that inform you of hazards that can kill or hurt you or others, or cause damage to the product.

All safety messages will be preceded by the safety alert symbol and the hazard signal word DANGER, WARNING, CAUTION. These words mean:

⚠ DANGER — You **will** be killed or seriously injured if you don't follow instructions.

⚠ WARNING — You **can** be killed or seriously injured if you don't follow instructions.

⚠ CAUTION — Indicates an imminently hazardous situation which, if not avoided, **may** result in minor or moderate injury, or product damage only.

All safety messages will identify the hazard, tell you how to reduce the chance of injury and tell you what can happen if the instructions are not followed.

⚠ WARNING

To reduce the risk of fire, electric shock, or injury to persons when using your product, basic safety precautions should be followed, including the following:

- NEVER unplug your refrigerator by pulling on the power cord. Always grip the plug firmly and pull it straight out from the outlet.
- Repair or replace immediately all electric service cords that have become frayed or otherwise damaged. Do not use a cord that shows cracks or abrasion damage along its length or at either the plug or connector end.
- When moving your refrigerator away from the wall, be careful not to roll over or damage the power cord.
- DO NOT store or use gasoline or other flammable vapors and liquids in the vicinity of this or any other appliance.
- DO NOT allow children to climb, stand or hang on the refrigerator doors or shelves in the refrigerator. They could damage the refrigerator and seriously injure themselves.
- Keep fingers out of "pinch point" areas; clearances between the doors and cabinet are necessarily small. Be careful when you open the doors when children are in the area.
- Unplug your refrigerator before cleaning or making any repairs. **NOTE:** We strongly recommend that any servicing be performed by a qualified individual.
- Before replacing a burned-out light bulb, **unplug** the refrigerator or turn off power at the circuit breaker or fuse box in order to avoid contact with a live wire filament. (Aburned-out light bulb may break when being replaced.) **NOTE:** Setting either or both controls to the OFF position does not remove power to the light circuit.
- Do not store bottles in the freezer compartment - they may break when frozen, causing damage.
- For personal safety, this appliance must be properly grounded. Have the wall outlet and the circuit checked by a qualified electrician to make sure the outlet is properly grounded.
- Read all instructions before using this appliance.
- Use this appliance only for its intended purpose as described in this use and care guide.
- After your refrigerator is in operation, do not touch the cold surfaces in the freezer compartment when hands are damp or wet. Skin may adhere to the extremely cold surfaces.
- In refrigerators with automatic icemakers, avoid contact with the moving parts of the ejector mechanism, or with the heating element that releases the cubes. DO NOT place fingers or hands on the automatic icemaking mechanism while the refrigerator is plugged in.
- DO NOT refreeze frozen foods which have thawed completely. The United States Department of Agriculture in Home and Garden Bulletin No. 69 says:

  "...You may safely refreeze frozen foods that have thawed if they still contain ice crystals or if they are still cold below 40 °F (4 °C)."

  "...Thawed ground meats, poultry, or fish that have any off-odor or off-color should not be refrozen and should not be eaten. Thawed ice cream should be discarded. If the odor or color of any food is poor or questionable, get rid of it. The food may be dangerous to eat."

  "Even partial thawing and refreezing reduces the eating quality of foods, particularly fruits, vegetables and prepared foods. The eating quality of red meats is affected less than that of many other foods. Use refrozen foods as soon as possible to save as much of their quality as you can."

SAVE THESE INSTRUCTIONS

⚠ CAUTION

This appliance is not intended for use by persons (including children) with reduce physical, sensory or mental capabilities, or lack of experience and knowledge, unless they have been given supervision or instruction concerning use of the appliance by person responsible for their safety. Children should be supervised to ensure that they do not play with the appliance.

⚠ DANGER: RISK OF CHILD ENTRAPMENT

Child entrapment and suffocation are not problems of the past. Junked or abandoned refrigerators are still dangerous... even if they will sit for "just a few days". If you are getting rid of your old refrigerator, please follow the instructions at right to help prevent accidents.

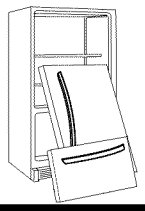

BEFORE YOU THROW AWAY YOUR OLD REFRIGERATOR OR FREEZER

- Take off the doors.
- Leave the shelves in place so that children may not easily climb inside.

CFC DISPOSAL

Your old refrigerator may have a cooling system that used CFC's (chlorofluorocarbons). CFC's are believed to harm stratospheric ozone.

If you are throwing away your old refrigerator, make sure the CFC refrigerant is removed for proper disposal by a qualified servicer. If you intentionally release this CFC refrigerant, you can be subject to fines and imprisonment under provisions of environmental legislation.

GROUNDING REQUIREMENTS

IMPORTANT: Please read carefully.

TO CONNECT ELECTRICITY

⚠ WARNING

Electrical Shock Hazard

FOR PERSONAL SAFETY, this appliance must be properly grounded. Have the wall outlet and the circuit checked by a qualified electrician to make sure the outlet is properly grounded.

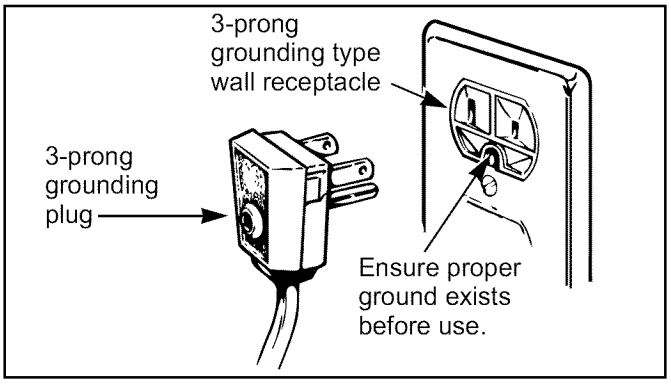

USE OF EXTENSION CORDS

Because of potential safety hazards under certain conditions, we strongly recommend against the use of an extension cord. However, if you still elect to use an extension cord, it is absolutely necessary that it be a UL-listed (in the United States), 3-wire grounding type appliance extension cord having a grounding type plug and outlet, and that the electrical rating of the cord be 15 amperes (minimum) and 120 volts.

Use of an extension cord will increase the clearance needed for the back of the refrigerator. If the supply cord is damaged, it must be replaced by the manufacturer or its service agent or a similarly qualified person in order to avoid any hazard.

RECOMMENDED GROUNDING METHOD

The refrigerator should always be plugged into its own individual properly grounded electrical outlet rated for 115 volts, 60Hz, AC only and fused at 15 or 20 amperes. This provides the best performance and also prevents overloading house wiring circuits which could cause a fire hazard from overheated wires. It is recommended that a separate circuit serving only this appliance be provided. Use a receptacle which cannot be turned off with a switch or pull chain. Do not use an extension cord.

Where a standard two-prong wall outlet is encountered, it is your personal responsibility and obligation to have it replaced with a properly grounded three-prong wall outlet. Do not, under any circumstances, cut or remove the third (Ground) prong from the power cord.

NOTE: Before performing any type of installation, cleaning, or removing a light bulb, turn the control (Thermostat, Refrigerator Control or Freezer Control, depending on the model) to OFF and then disconnect the refrigerator from the electrical source. When you are finished, reconnect the refrigerator to the electrical source and reset the control (thermostat, refrigerator control or freezer control, depending on the model) to the desired setting.

FREEZER DRAWER MODEL

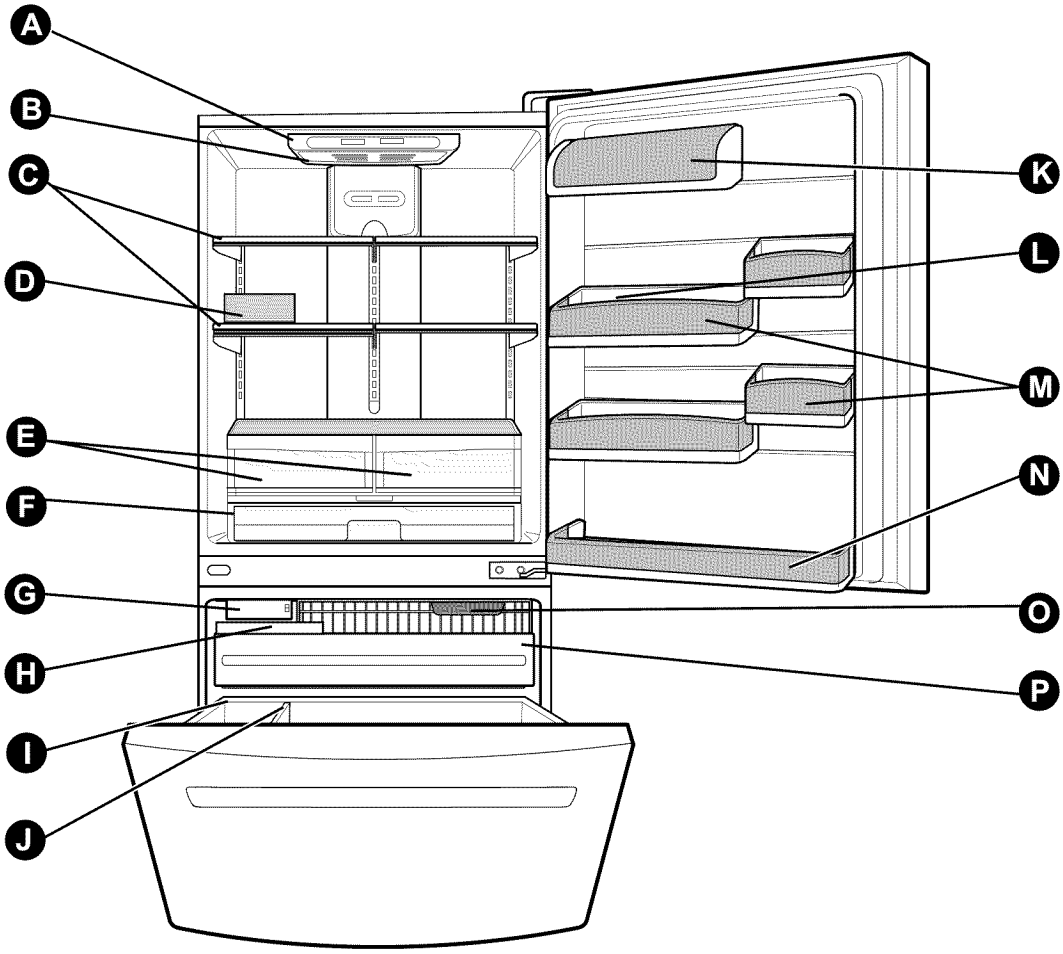

Use this section to become more familiar with the parts and features.

NOTE: This guide covers several different models. The refrigerator you have purchased may have some or all of the items listed below. The locations of the features shown below may not match your model.

- **A** Digital Sensor Control
- **B** Refrigerator Light
- **C** Shelves
- **D** Egg Box
- **E** Optibin Crispers
  Keeps fruits and vegetable fresh and crisp
- **F** Pantry
- **G** Icemaker*
- **H** Ice Bin
- **I** Durabase
- **J** Divider
- **K** Dairy Bin
- **L** Bottle Guide
- **M** Door Bins
- **N** Refrigerator Door Rack
- **O** Freezer Light
- **P** Pull out Drawer

*on some models

FREEZER SWING DOOR MODEL

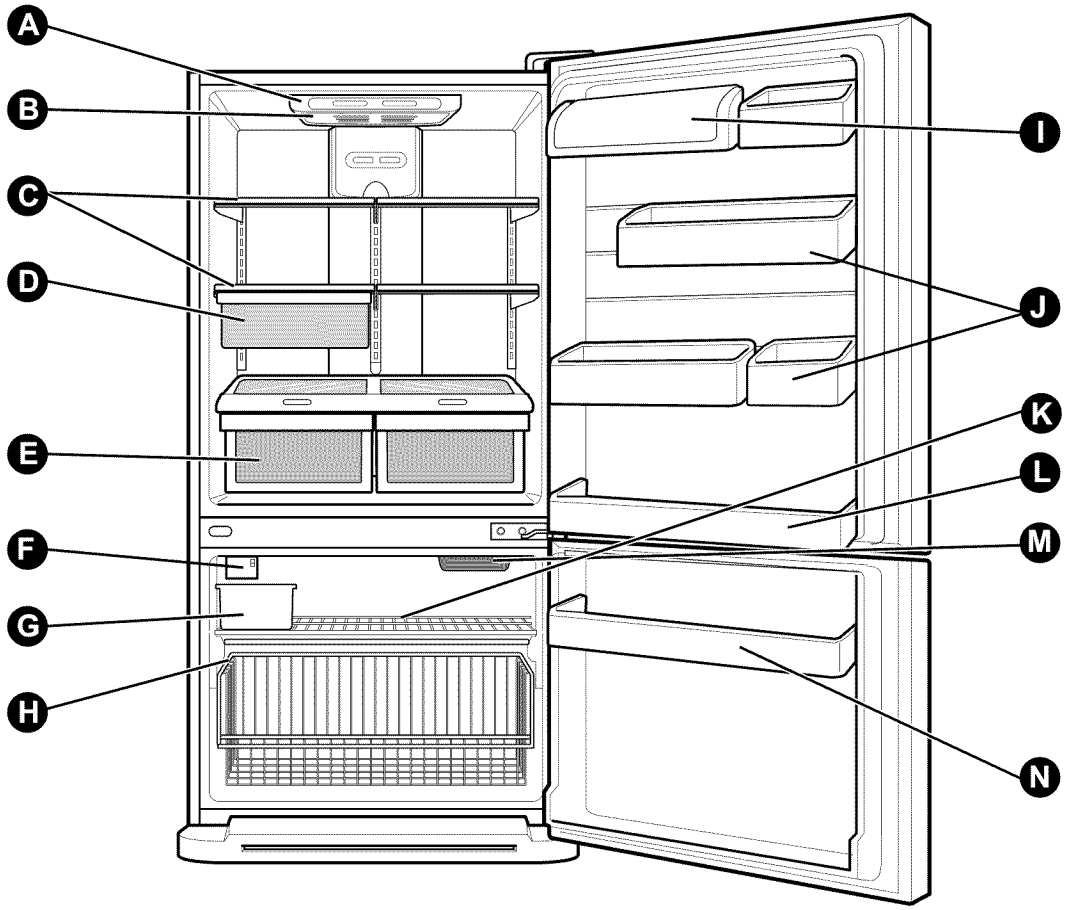

Use this section to become more familiar with the parts and features.

NOTE: This guide covers several different models. The refrigerator you have purchased may have some or all of the items listed below. The locations of the features shown below may not match your model.

- **A** Digital Sensor Control
- **B** Refrigerator Light
- **C** Shelves
- **D** Snack Pan
- **E** Optibin Crisper
  Keeps fruits and vegetable fresh and crisp
- **F** Icemaker
- **G** Ice Bin
- **H** Wire Durabase
- **I** Dairy Bin
- **J** Door Bins
- **K** Wire Freezer Shelf
- **L** Refrigerator Door Rack
- **M** Freezer Light
- **N** Freezer Door Rack

⚠ WARNING

Excessive Weight Hazard

Use two or more people to move and install refrigerator.

Failure to do so can result in back or other injury.

UNPACKING YOUR REFRIGERATOR

Remove tape and any temporary labels from your refrigerator before using. Do not remove any warning-type labels, the model and serial number label, or the Tech Sheet that is attached to back wall of the refrigerator.

To remove any remaining tape or glue, rub the area briskly with your thumb. Tape or glue residue can also be easily removed by rubbing a small amount of liquid dish soap over the adhesive with your fingers. Wipe with warm water and dry.

Do not use sharp instruments, rubbing alcohol, flammable fluids or abrasive cleaners to remove tape or glue. These products can damage the surface of your refrigerator. For more information, see the **Important Safety Instructions** section.

Refrigerator shelves are installed in the shipping position.

Please reinstall shelves according to your individual storage needs.

When Moving Your Refrigerator:
Your refrigerator is heavy. When moving the refrigerator for cleaning or service, be sure to protect the floor. Always pull the refrigerator straight out when moving it. Do not wiggle or walk the refrigerator when trying to move it, as floor damage could occur.

⚠ WARNING

Explosion Hazard

Keep flammable materials and vapors, such as gasoline, away from refrigerator.

Failure to do so can result in death, explosion or fire.

INSTALLATION

1. Avoid placing the unit near heat sources, direct sunlight, or moisture.
2. To avoid vibration, the unit must be level. If required, adjust the leveling screws to compensate for unevenness of the floor. The front should be slightly higher than the rear to aid in door closing. Leveling screws can be turned easily by tipping the cabinet slightly. Turn the leveling screws clockwise ( ) to raise the unit, counterclockwise ( ) to lower it.
3. Install this appliance in an area where the temperature is between 55 °F (13 °C) and 110 °F (43 °C.) If the temperature around the appliance is too low or high, cooling ability may be adversely affected.

⚠ **CAUTION:** Avoid placing the unit near heat sources, direct sunlight or moisture.

NOTE: For proper air circulation, best cooling and energy consumption results, maintain a minimum distance of 2 inches (5.08cm) from adjacent items and surfaces

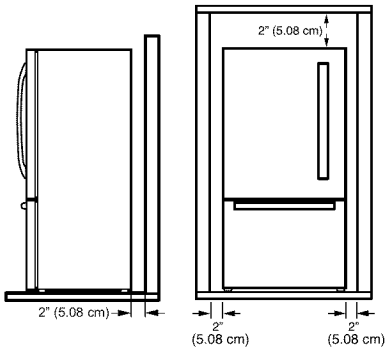

NEXT

1. Clean your refrigerator thoroughly and wipe off all dust accumulated during shipping.
2. Install accessories such as ice cube bin, drawers, shelves, etc., in their proper places. They are packed together to prevent possible damage during shipment.
3. Let your refrigerator run for 2 or 3 hours before putting food in it. Check the flow of cold air in the freezer compartment to ensure proper cooling. Your refrigerator is now ready for use.

⚠ WARNING

- Be careful when you work with hinge, base grille, stopper etc. You may be injured.
- Do not put hands or metal sticks into air vents, base grille or bottom of refrigerator. You may be injured or receive an electrical shock.

BASE GRILLE INSTRUCTIONS

To Install Base Grille

- Refrigerator door should be opened or removed. (Necessary on some models).
- Use the 2 Phillips screws provided in the literature package to attach the Base Grille.

To Remove Grille

- Open or remove refrigerator door. (Necessary on some models)
- Take out the base grille by removing the 2 screws on the bottom of the refrigerator.

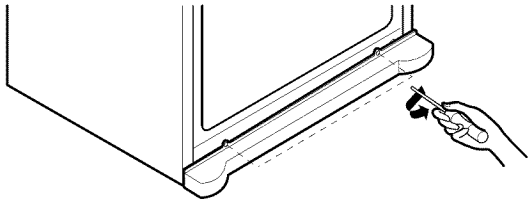

⚠ WARNING

ELECTRICAL SHOCK HAZARD

Before you begin, either unplug the refrigerator or turn off power at the circuit breaker or fuse box. Failure to do so could result in death or serious injury.

⚠ CAUTION

Remove food and any Adjustable Door or Utility Bins from doors. Failure to do so could result in serious injury.

REMOVING AND REPLACING DOORS

(For Freezer Drawer Models)

If entrance is less than 35-inches wide, the refrigerator door and freezer drawer will need to be removed.

TOOLS NEEDED:

- 10mm or 13/32-inch socket wrench (with 2-inch extension for bottom door hinge)
- No. 2 Phillips head screwdriver
- Flat-head screwdriver for prying
- Adjustable wrench

Before removing the doors, remove the Base Grille. See **BASE GRILLE INSTALLATION** for reference.

HOW TO REMOVE REFRIGERATOR DOOR

- Gently pry off the Top Hinge Cover with a flat head screwdriver and remove.

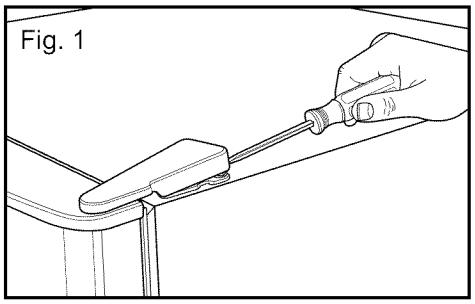

- Using 10mm or 13/32-inch socket wrench, remove the 3 bolts and lift off the Top Hinge. Set parts aside.

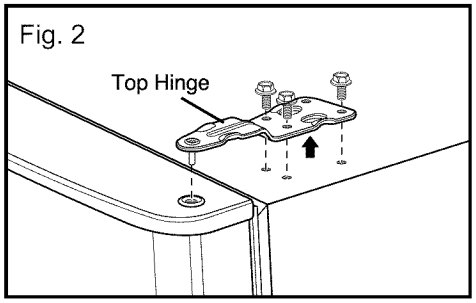

- Lift up door slightly and remove it. Place door on a non scratching surface.

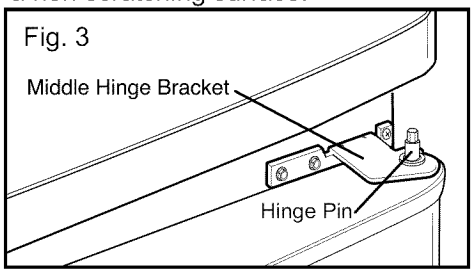

- Remove washer and set aside.
- Use a 10mm or 13/32 inch socket wrench to remove the 2 bolts in Middle Hinge Bracket. Remove screws. Set Middle Hinge Bracket and other parts aside.

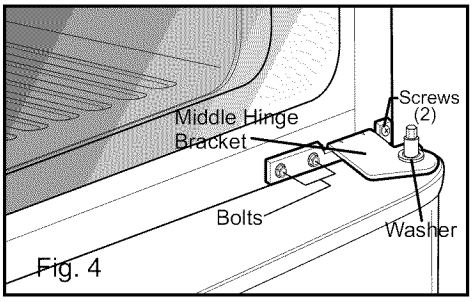

HOW TO REMOVE PULL OUT DRAWER

IMPORTANT: To avoid possible injury, product or property damage, you will need two people to perform the following instructions.

- Pull the drawer open to full lower extension. Remove durabase by lifting it from rail system.

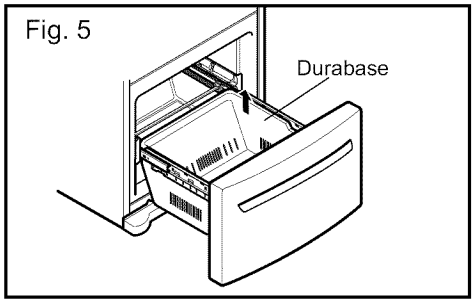

- Press both hangers with your thumbs to lift it up.

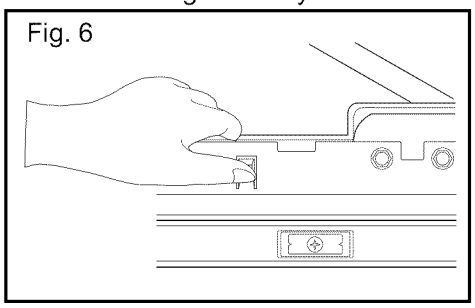

- Separate the left and right rail cover

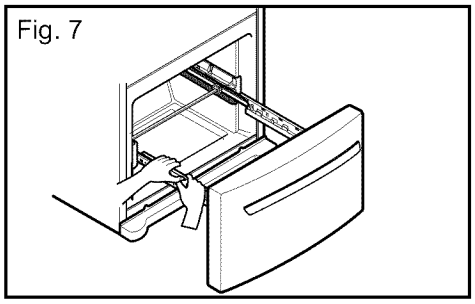

- Remove the screws of the rail on both sides.

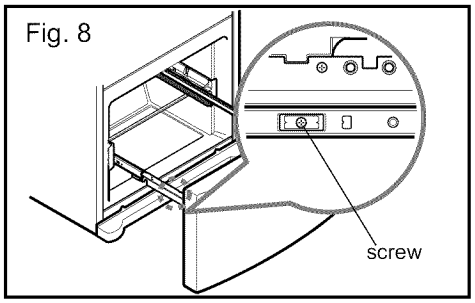

⚠ **CAUTION:** When removing drawer door, do not hold it by the handle. Door could fall down and you may be injured. Grasp door with both hands as pictured below when removing.

⚠ **CAUTION:** When laying down the drawer, be careful not to damage the floor or hurt your feet with the sharp edges on hinge side.

- With both hands, hold both sides of the door and pull it up to separate it from the rails.

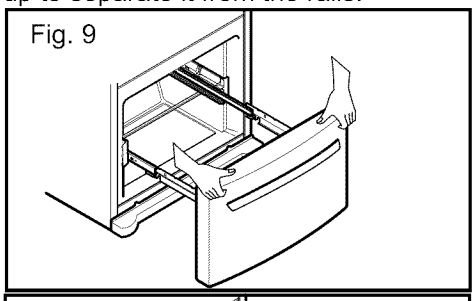

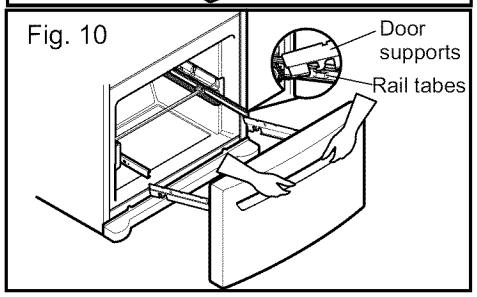

- Push rails back into drawer cavity. With both hands, hold the center of the bar and push it in so that both rails go back simultaneously.

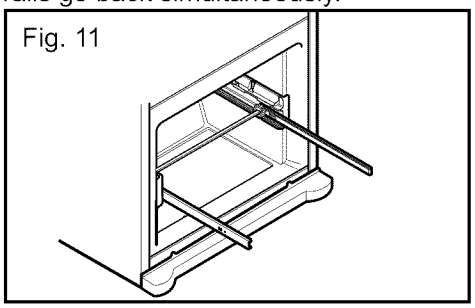

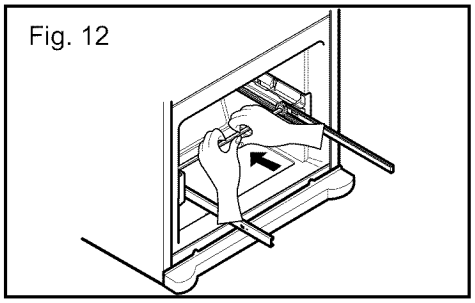

REPLACING REFRIGERATOR DOOR

- Reattach Middle Hinge Bracket with the previously removed 2 bolts and 2 screws.

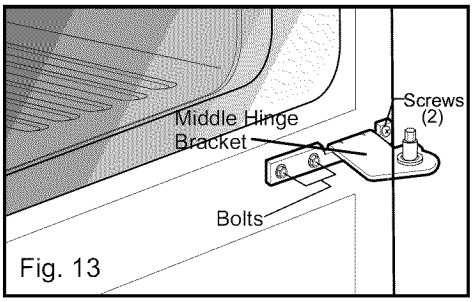

- Put refrigerator door down over the Hinge Pin on the Middle Hinge Pin Bracket.

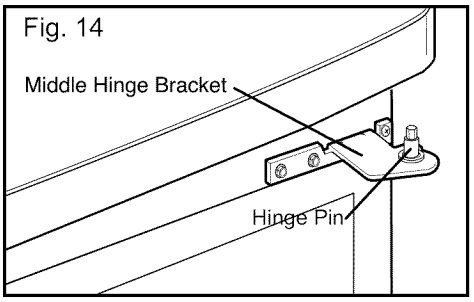

- Line up Top Hinge with holes in top of refrigerator. Use the 3 bolts to replace the Hinge.

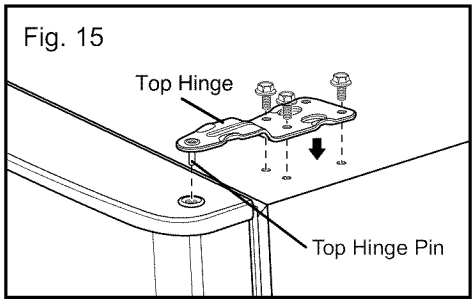

- Tighten Bolts. Force-fit Top Hinge Cover over top Hinge.

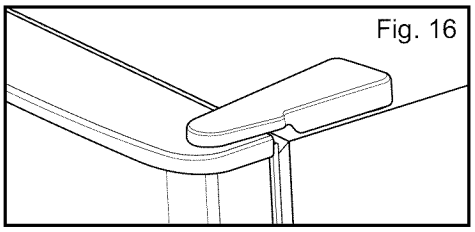

HOW TO INSTALL PULL OUT DRAWER

IMPORTANT: To avoid possible injury, product or property damage, you will need two people to perform the following instructions.

- With both hands, hold the center of the bar and pull it out to let both rails out to full extension simultaneously.

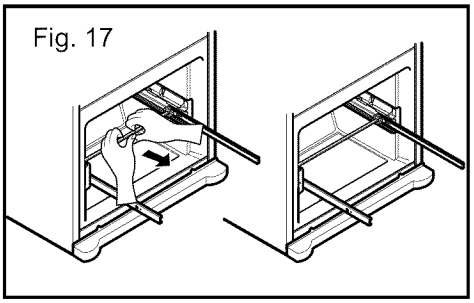

- Hook door supports into rail tabs.

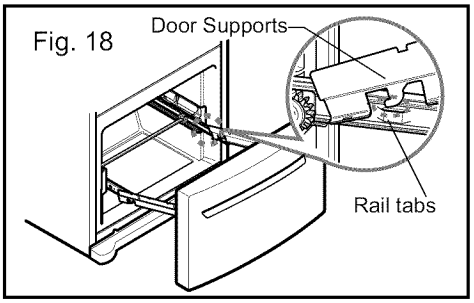

- Lower door into final position and tighten the screws.

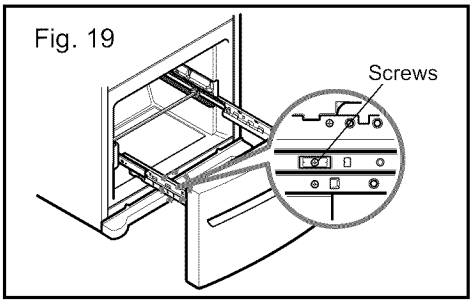

- Make sure you have the correct rail cover for each side.

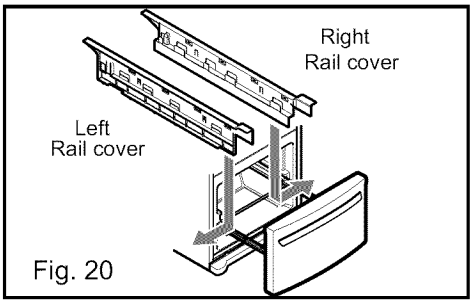

- Align the top holes of the rail cover with the top holes of the door supports to assemble the rail cover.

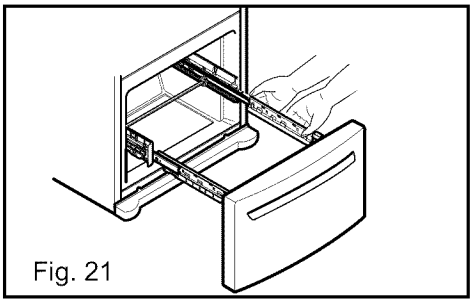

- Verify the hole's alignment.

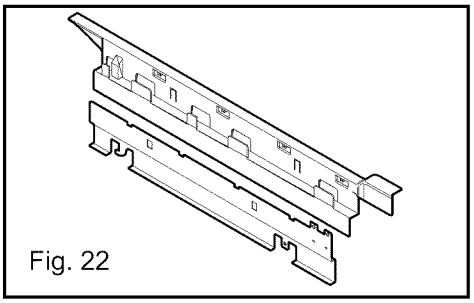

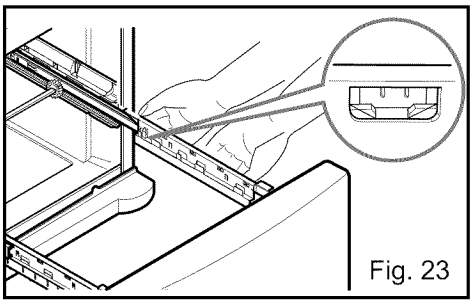

- With the rails pulled out to full extension, insert the Durabase drawer in the rail assembly.

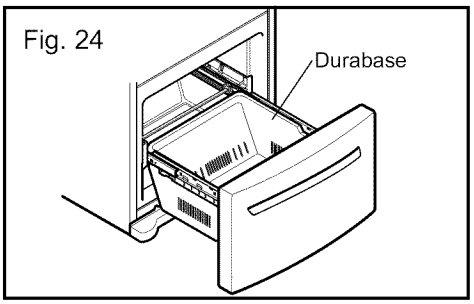

⚠ **WARNING:** To prevent accidental child and pet entrapment or suffocation risk, DO NOT allow them to play inside of drawer.

⚠ **WARNING:** DO NOT step or sit down on Freezer Door.

REMOVING,REVERSING AND REPLACING

REFRIGERATOR DOORS (For Freezer Drawer Models)

⚠ WARNING

ELECTRICAL SHOCK HAZARD
Before you begin, either unplug the refrigerator or turn off power at the circuit breaker or fuse box. Failure to do so could result in death or serious injury.

⚠ CAUTION

Remove food and any Adjustable Door or Utility Bins from doors. Failure to do so could result in serious injury.

REVERSING DOORS

You may find it more convenient to have the doors converted from the left-opening type (factory installed) to the right-opening type. Directions refer to the right side as the side on your right as you face the unit.

TOOLS NEEDED

- 10mm or 13/32-inch socket wrench (with 2-inch extension for bottom door hinge)
- No. 2 Phillips head screwdriver
- ¼ inch socket wrench
- Flat-head screwdriver for prying
- Adjustable wrench

- Gently pry off the Top Hinge Cover with a flat head screwdriver and remove.

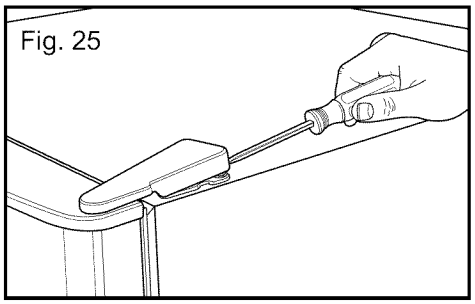

- Using 10mm or 13/32-inch socket wrench, remove the 3 bolts and lift off the Top Hinge. Set parts aside.

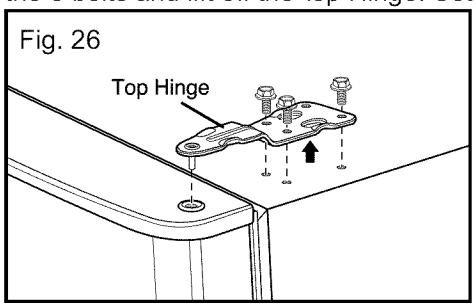

- Lift up refrigerator door slightly and remove it.

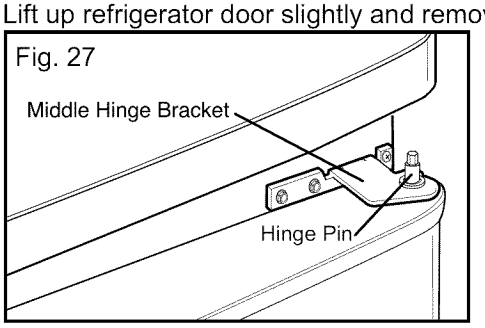

- Remove Hinge Pin Insert on the right side of the door and reinstall on left side.

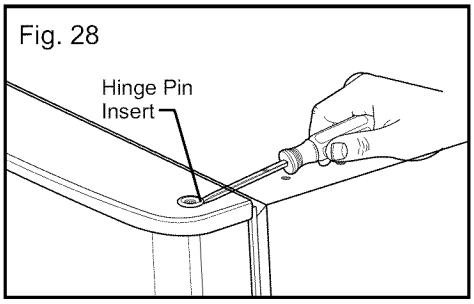

- Turn refrigerator door upside down on a non-scratch surface.
- Loosen the 2 screws to remove the Bottom Hinge Pin Insert Bracket with Hinge Pin Insert.

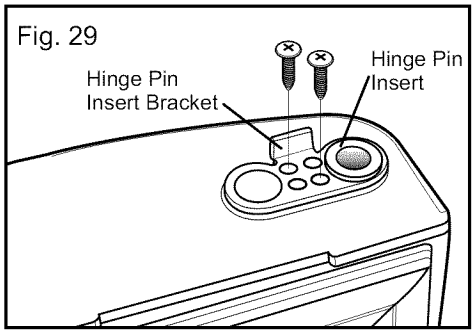

- Remove screw on the opposite side of the door. This screw is no longer necessary and can be discarted.
- Move the Hinge Pin Insert Bracket to the other side of the door, keeping the same orientation, and push the Hinge Pin Insert into the hole on the left side of the bracket. Insert the 2 screws as shown below.

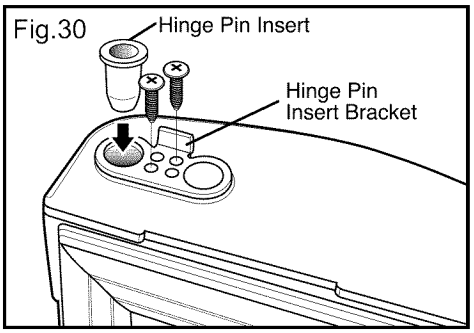

- Pry off cover on top of refrigerator on left side to uncover screw holes and place it on the right side.

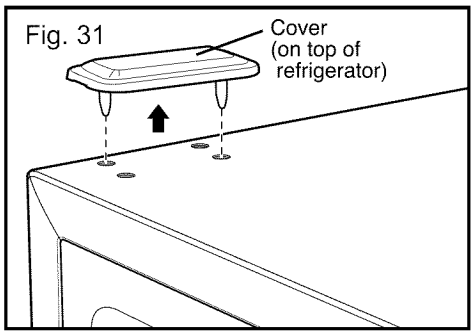

- Remove Washer and set aside.
- Using a 1/4 socket wrench, loosen and remove Hinge Pin from the Middle Hinge Bracket.

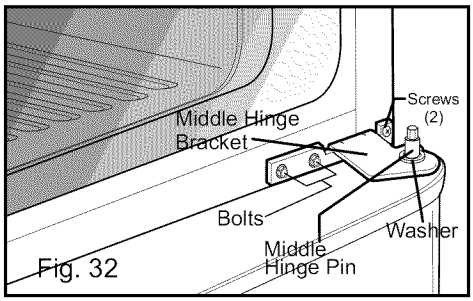

Fig. 32

- Use a 10mm or 13/32 inch socket wrench to remove the 2 bolts in Middle Hinge Bracket. Remove 2 screws. Set Middle Hinge Bracket and other parts aside.
- With a flat-head screwdriver, carefully pry off and remove the cover over the screw holes on the left side of refrigerator housing.

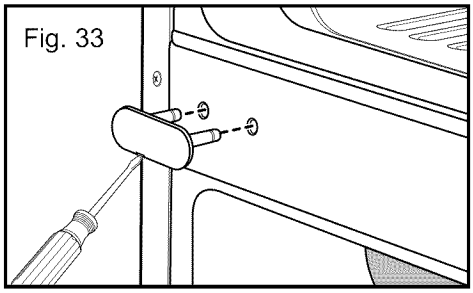
Fig. 33

- Remove the 2 outer screws from cabinet frame as shown.
  You will need these holes for the Middle Hinge Bracket.

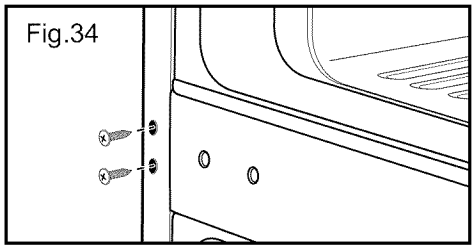
Fig.34

- Place screws into outer holes on right side of cabinet. Attach cover on the right side. Cover is force-fitted.

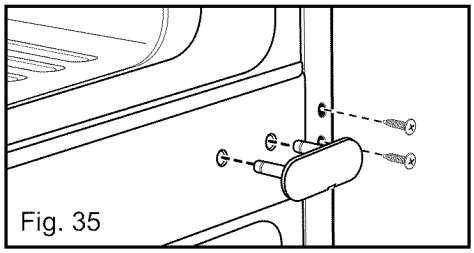
Fig. 35

- Flip the middle hinge bracket and position on left side of refrigerator and re-attach with two bolts and a 2 phillips screws.

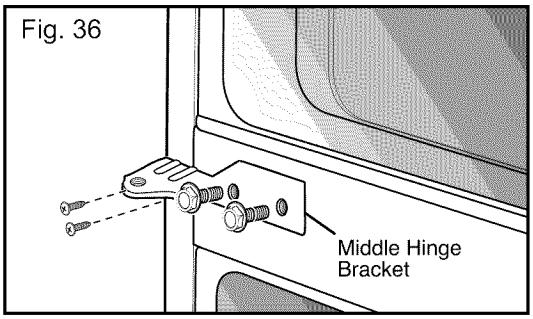

Fig. 36

- Attach Middle Hinge Pin and replace washer.
- Put refrigerator door down over the Hinge Pin on the Middle Hinge Pin Bracket.

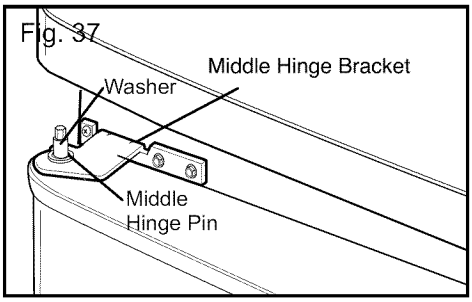

Fig. 37

- Line up Top Hinge with holes in top of refrigerator. Use the 3 bolts to replace the Hinge.

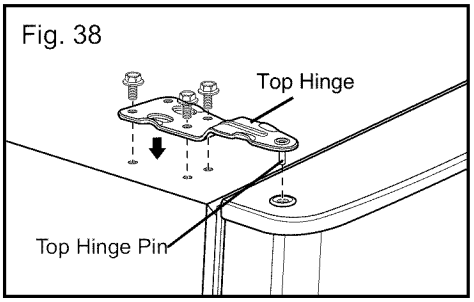

Fig. 38

- Tighten Bolts. Force-fit Top Hinge Cover over top Hinge.

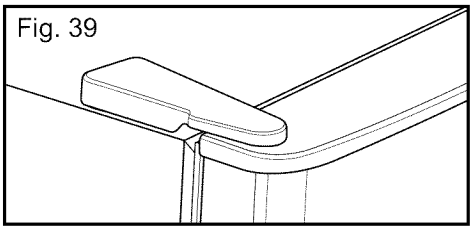
Fig. 39

HOW TO REVERSE DOOR HANDLE

NOTE: Handle appearance may vary from illustrations on this page.

- Loosen the 2 set screws with a 3/32” hex wrench and remove the handle.

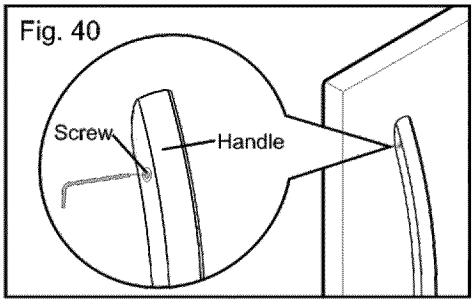

Fig. 40

- Loosen the handle mounting fasteners with a 1/4” hex wrench.

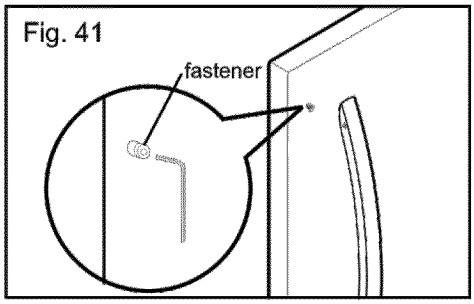

Fig. 41

- Unscrew the buttons with your fingers by rotating counterclockwise; they will loosen and fall free.

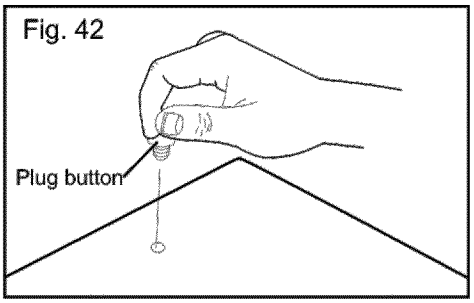

Fig. 42

- Install the plug buttons on the left side.

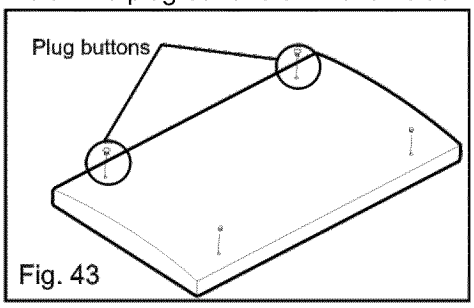

Fig. 43

- Install the handle mounting fasteners on the right side. Turn handle upside down.

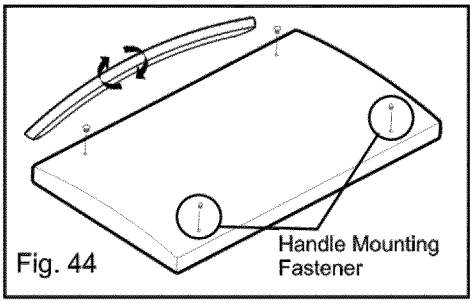

Fig. 44

- Install the handle by adjusting handle footprints to fit mounting fasteners. Tighten the set screws with a 3/32" hex wrench.

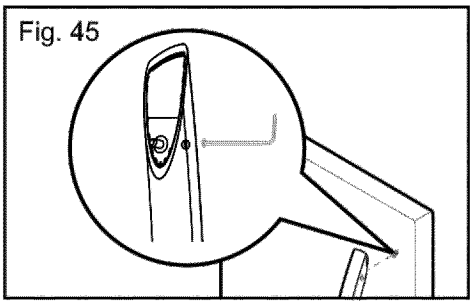
Fig. 45

⚠ WARNING

ELECTRICAL SHOCK HAZARD

Before you begin, either unplug the refrigerator or turn off power at the circuit breaker or fuse box. Failure to do so could result in death or serious injury.

⚠ CAUTION

Remove food and any Adjustable Door or Utility Bins from doors. Failure to do so could result in serious injury.

REMOVING AND REPLACING DOORS

(For Freezer Swing Models)

If entrance is less than 35-inches wide, the refrigerator's doors will need to be removed.

TOOLS NEEDED:

- 10mm or 13/32-inch socket wrench (with 2-inch extension for bottom door hinge)
- No. 2 Phillips head screwdriver
- Flat-head screwdriver for prying
- Adjustable wrench

Before removing the doors, remove the Base Grille. See **BASE GRILLE INSTALLATION** for reference.

HOW TO REMOVE REFRIGERATOR DOOR

- Gently pry off the Top Hinge Cover with a flat head screwdriver and remove.

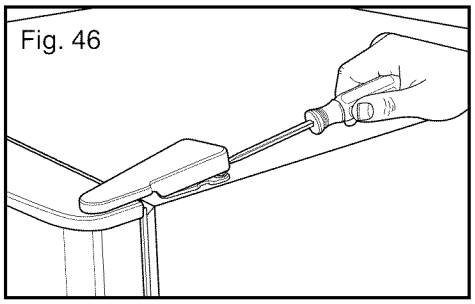

- Using 10mm or 13/32-inch socket wrench, remove the 3 bolts and lift off the Top Hinge. Set parts aside.

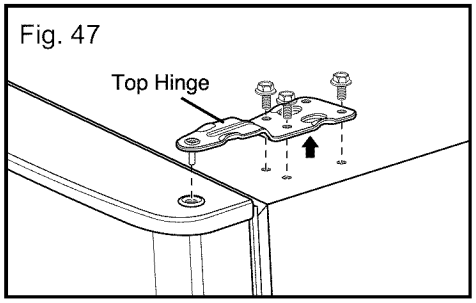

- Lift up door slightly and remove it. Place door on a non-scratching surface.

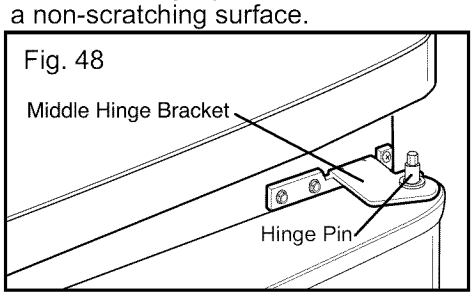

- Remove washer and set aside.

  Using a 1/4 socket wrench, loosen and remove Hinge Pin from the Middle Hinge Bracket.

- Use a 10mm or 13/32 inch socket wrench to remove the 2 bolts in Middle Hinge Bracket. Remove screws. Set Middle Hinge Bracket and other parts aside.

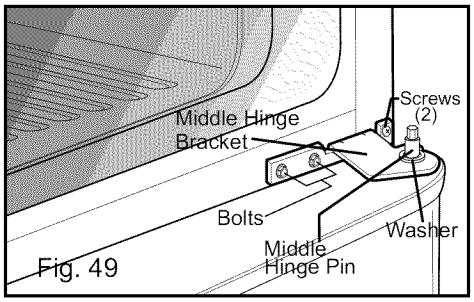

- Carefully lift up the freezer door. Remove and place it on a non-scratching surface.
- Using a 13/32" 10mm socket wrench with a 2" extension, loosen the 2 bolts and remove Bottom Hinge Bracket from right side.

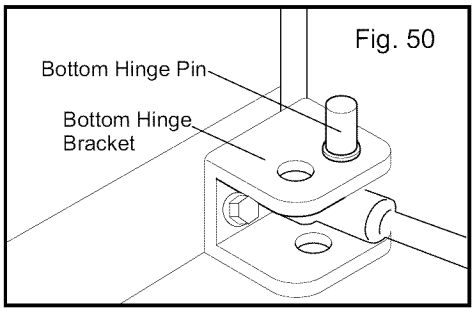

HOW TO REPLACE REFRIGERATOR AND FREEZER DOORS

- Reattach Bottom Hinge Bracket using the 2 previously removed bolts.
- Reattach Middle Hinge Bracket with the previously removed 2 bolts and 2 screws.

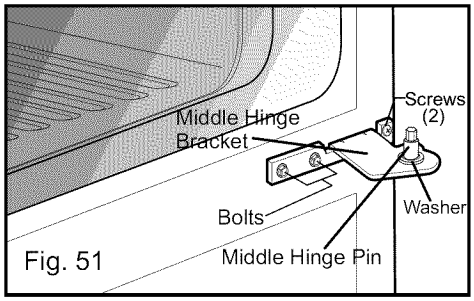

- Place freezer door down on Bottom Hinge Pin.

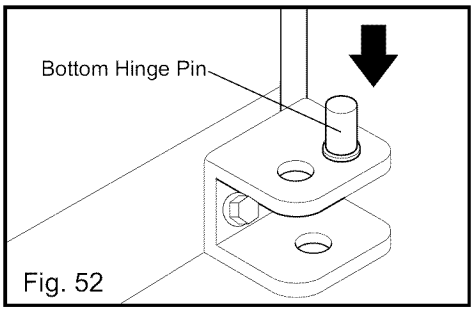

Fig. 52

- Reattach Middle Hinge Pin. Replace washer.

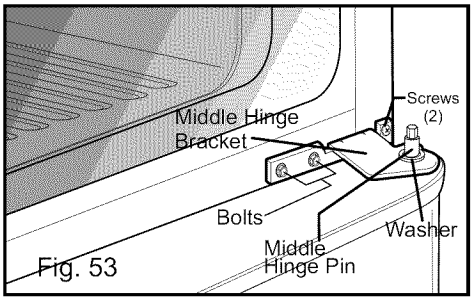

Fig. 53

- Put refrigerator door down over the Hinge Pin on the Middle Hinge Pin Bracket.

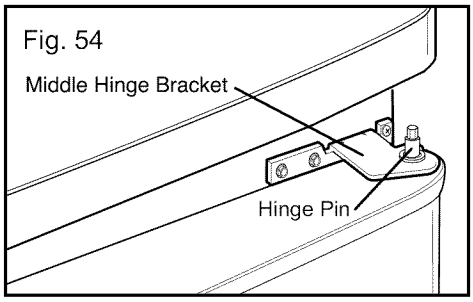

Fig. 54

- Line up Top Hinge with holes in top of refrigerator. Use the 3 bolts to replace the Hinge.

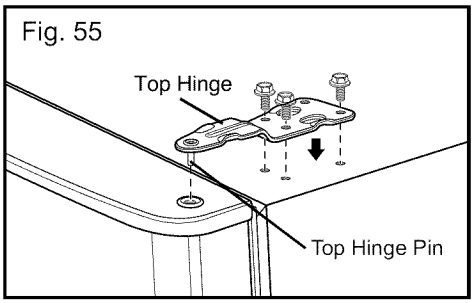

Fig. 55

- Tighten Bolts. Force-fit Top Hinge Cover over top Hinge.

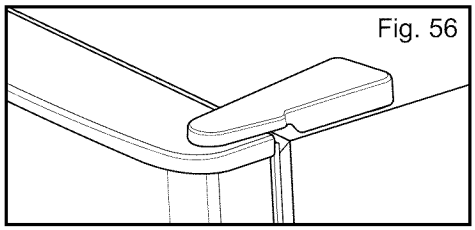
Fig. 56

REMOVING,REVERSING AND REPLACING REFRIGERATOR DOORS (For Freezer Swing Models)

⚠ WARNING

ELECTRICAL SHOCK HAZARD

Before you begin, either unplug the refrigerator or turn off power at the circuit breaker or fuse box. Failure to do so could result in death or serious injury.

⚠ CAUTION

Remove food and any Adjustable Door or Utility Bins from doors. Failure to do so could result in serious injury.

REVERSING DOORS

You may find it more convenient to have the doors converted from the left-opening type (factory installed) to the right-opening type. Directions refer to the right side as the side on your right as you face the unit.

TOOLS NEEDED

- 10mm or 13/32-inch socket wrench (with 2-inch extension for bottom door hinge)
- No. 2 Phillips head screwdriver
- ¼ inch socket wrench
- Flat-head screwdriver for prying
- Adjustable wrench

- Gently pry off the Top Hinge Cover with a flat head screwdriver and remove.

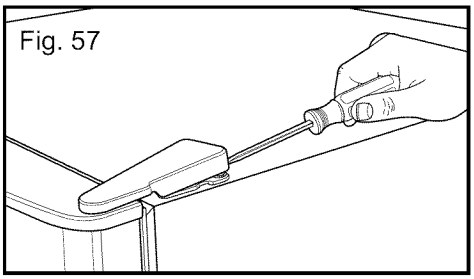
Fig. 57

- Using 10mm or 13/32-inch socket wrench, remove the 3 bolts and lift off the Top Hinge. Set parts aside.

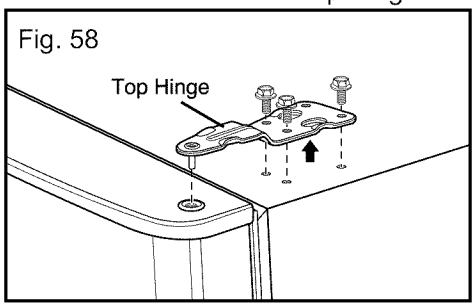

Fig. 58

- Lift up refrigerator door slightly and remove it.

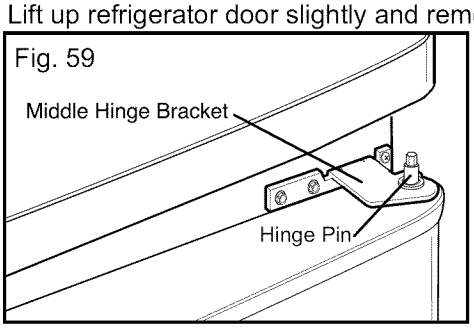

Fig. 59

- Remove Hinge Pin Insert on the right side of the door and reinstall on left side of door.

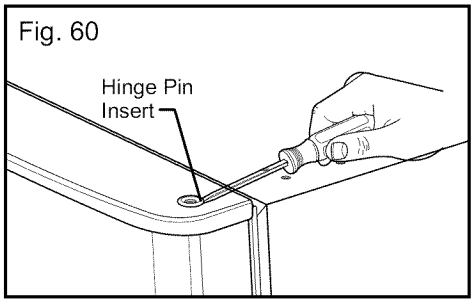

- Turn refrigerator door upside down on a non-scratch surface.
- Loosen the 2 screws to remove the Bottom Hinge Pin Insert Bracket with Hinge Pin Insert.

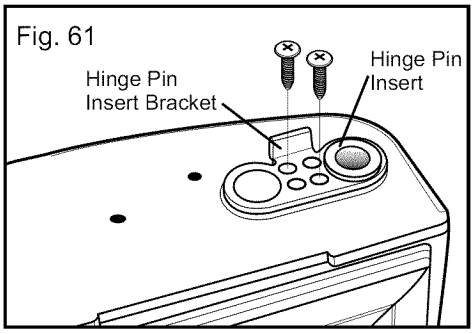

- Remove the screw on the opposite side of the door. This screw is no longer necessary and can be discarted.
- Move the Hinge Pin Insert Bracket to the other side of the door, keeping the same orientation, and push the Hinge Pin Insert into the hole on the left side of the bracket. Insert the 2 screws as shown below.

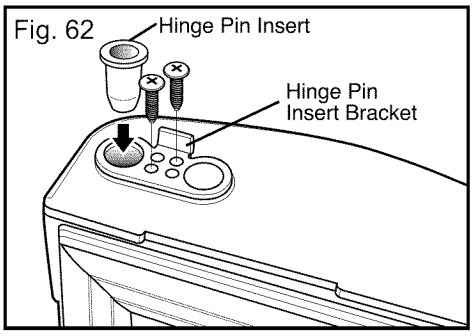

- Pry off cover on top of refrigerator on left side to uncover screw holes and place it on the right side.

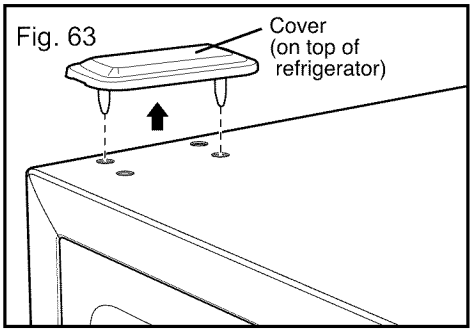

- Remove Washer and set aside.
- Using a 1/4" socket wrench, loosen and remove Hinge Pin from the Middle Hinge Bracket.

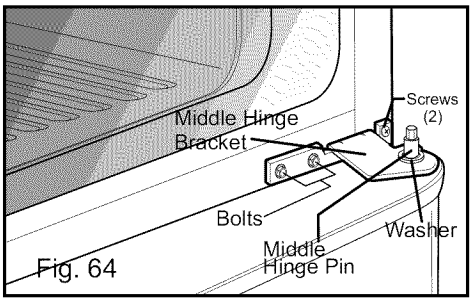

- Carefully lift up the freezer door. Remove and place it on a non scratching surface.
- Turn freezer door upside down.
- With door upside down, loosen the 2 screws and remove the Door Closer/Stop.

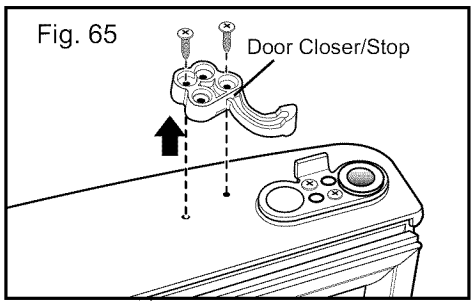

- Loosen the 2 screws to remove the Bottom Hinge Pin Insert Bracket with Hinge Pin Insert.

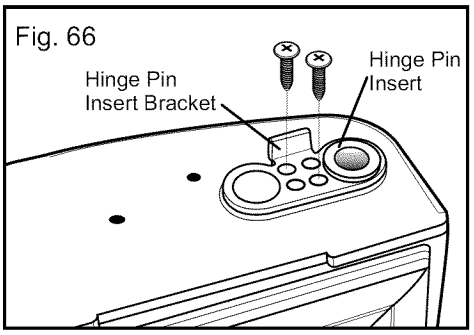

- Remove the screw on the opposite side of the door. This screw is no longer necessary and can be discarded.
- Move the Hinge Pin Insert Bracket to the other side of the door, keeping the same orientation, and push the Hinge Pin Insert into the hole on the left side of the bracket. Insert the 2 screws as shown below.

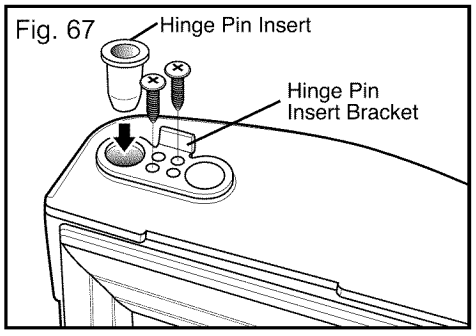

- Take Door Closer/Stop and flip. Line up screw holes and mount on left side of door bottom with the 2 screws. Turn door upright and set aside.

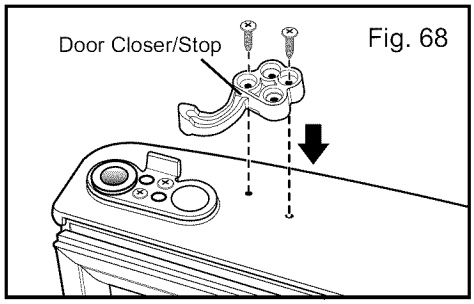

Fig. 68

- Use a 10mm or 13/32 inch socket wrench to remove the 2 bolts in Middle Hinge Bracket. Remove 2 screws. Set Middle Hinge Bracket and other parts aside.

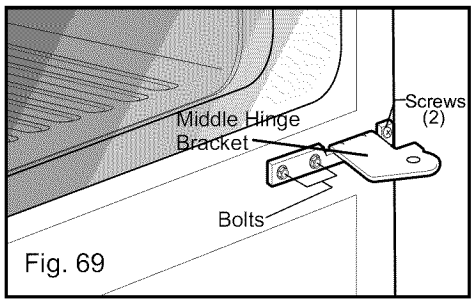

Fig. 69

- With a flat-head screwdriver, carefully pry off and remove the cover over the screw holes on the left side of refrigerator housing.

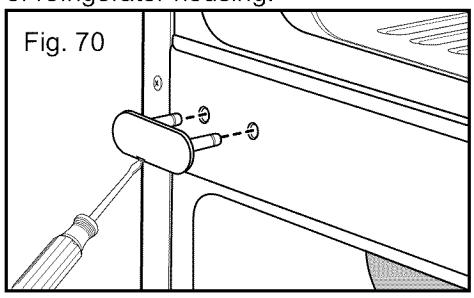
Fig. 70

- Remove the 2 outer screws from cabinet frame as shown.
  You will need these holes for the Middle Hinge Bracket.

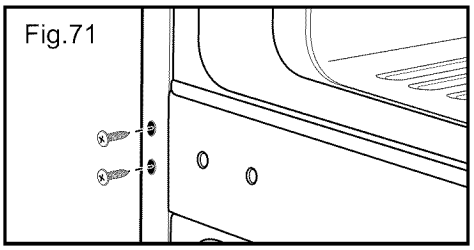
Fig.71

- Place screws into outer holes on right side of cabinet.
- Attach cover on the right side. Cover is force-fitted.

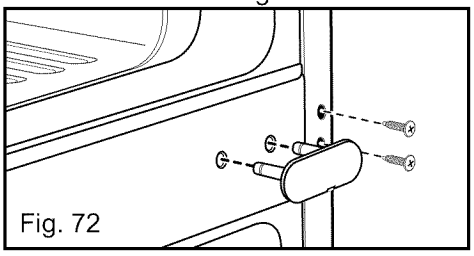
Fig. 72

- Flip the middle hinge bracket and position on left side of refrigerator and re-attach with two bolts and a 2 phillips screws.

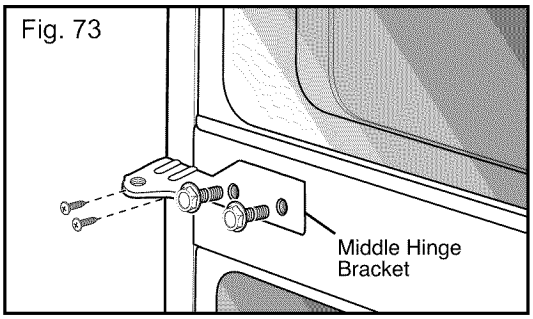

Fig. 73

- Using a 13/32" or 10mm socket wrench with 2" extension, loosen the 2 bolts and remove bottom hinge from right side.

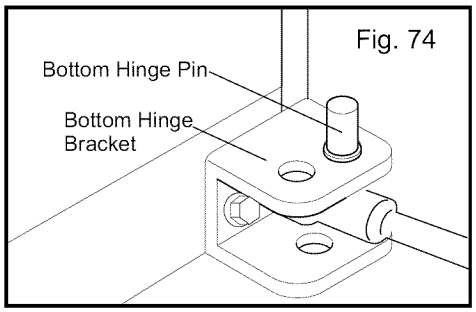

Fig. 74

- Remove the bolt on bottom of refrigerator from the left side and insert it on the right side.
  You will need this hole for the Bottom Hinge.

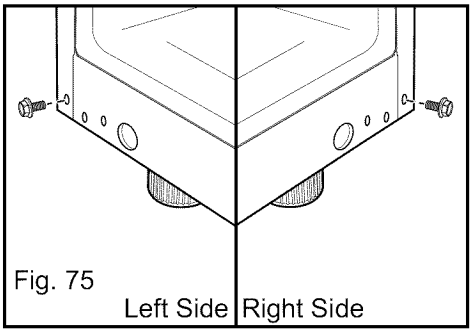

Fig. 75

- Move the Bottom Hinge to the left side keeping the same orientation and attach 2 bolts.

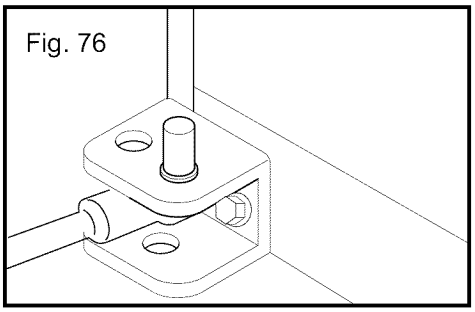
Fig. 76

- Change the Hinge Pin from the right side to left side.

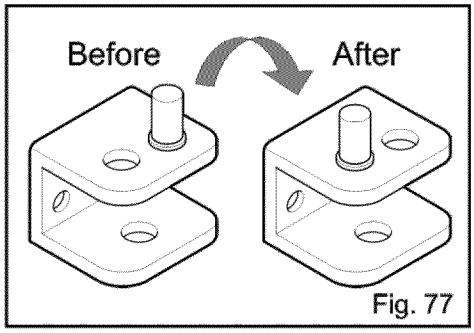

Fig. 77

- Put freezer door down over the Bottom Hinge Pin on the Bottom Hinge Bracket.
- Reattach Middle Hinge Pin using a 1/4" socket wrench. Replace washer.
- Put refrigerator door down over the Hinge Pin on the Middle Hinge Pin Bracket.

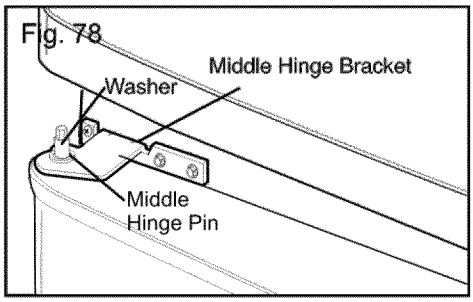

Fig. 78

- Line up Top Hinge with holes in top of refrigerator. Use the 3 bolts to replace the Hinge.

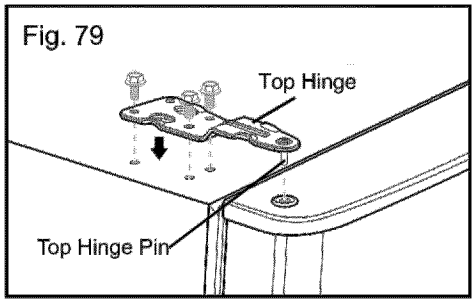

Fig. 79

- Tighten Bolts. Force-fit Top Hinge Cover over Top Hinge.

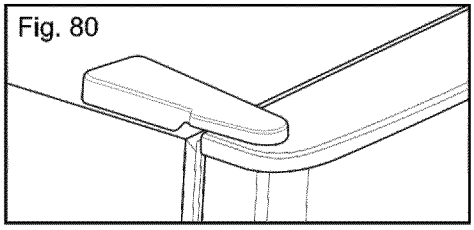
Fig. 80

HOW TO REVERSE DOOR HANDLE

NOTE: To assist in installing the handle on the right side, place a small piece of masking tape near the top of the handle before removing.

- Grasp the handle tightly with both hands and slide the handle up (this may require some force).

- The keyhole slots on the back of the handle allow the handle to separate from the mounting screws.

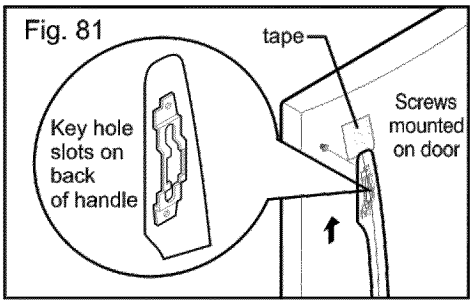

Fig. 81

- Use an adjustable wrench to remove the 2 handle mounting screws.

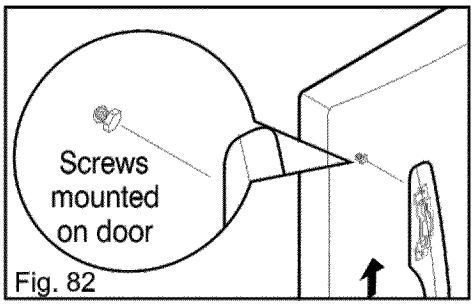

Fig. 82

⚠ CAUTION

To avoid scratching the door. Do not remove the plug buttons by prying with a screwdriver.

- Unscrew the buttons with your fingers by rotating counterclockwise; they will loosen and fall free.

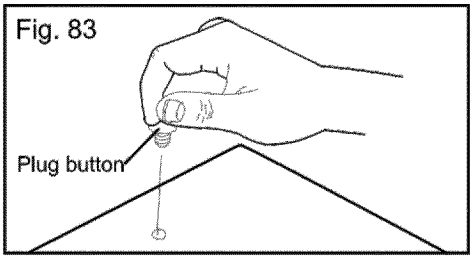

Fig. 83

- Install the plug buttons on the left side.

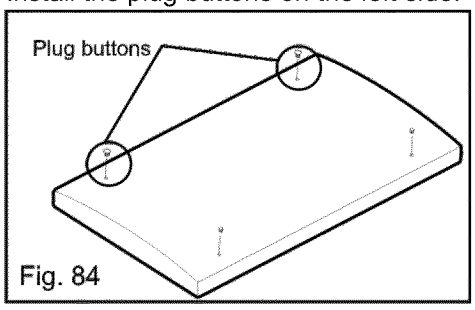

Fig. 84

- Install the handle mounting screws on the right side.

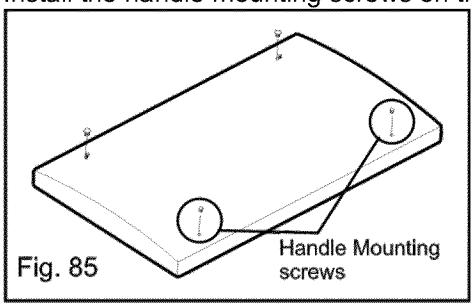

Fig. 85

- Keeping the same top and bottom orientation, align the keyhole slots on the door handle to the handle mounting screws on the door and grasping the handle with both hands, press it firmly against the front of the door and slide the handle down. This may require some force. Remove handle top marking tape if used.

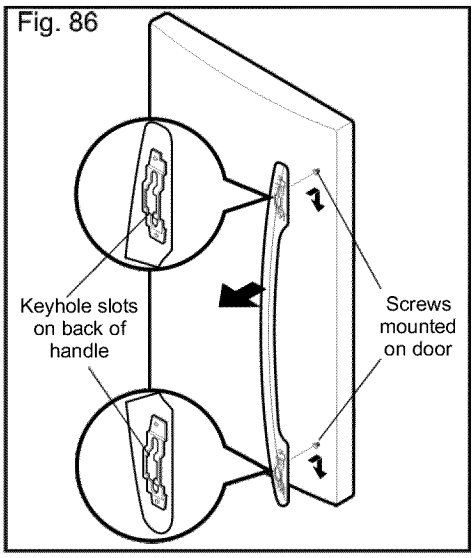

AFTER COMPLETING THE JOB

Make sure that the four corners of the door gasket are not folded over. To ensure a good seal, apply a small amount of silicon grease on the gasket.

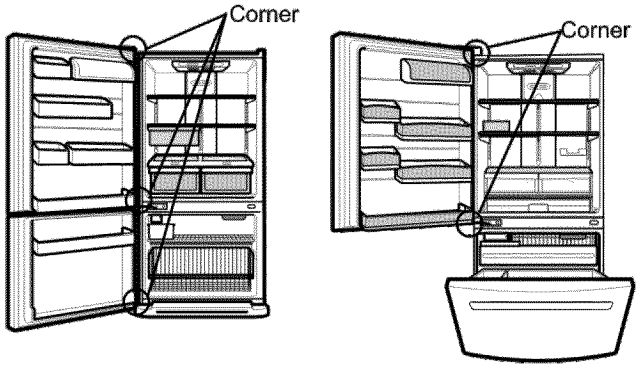

LEVELING AND DOOR CLOSING

To avoid vibration, the unit must be leveled. If necessary, adjust the Leveling Legs to compensate for unevenness of the floor. The front should be slightly higher than the rear to aid in door closing.

Your refrigerator has two Front Leveling Screws – one on the right and one on the left. If your refrigerator seems unsteady or you want the doors to close more easily, adjust the refrigerator's tilt using the instructions below:

1. Plug refrigerator power cord into a 3-prong grounded outlet. Move the refrigerator into its final position.
2. Remove the base grille. See **BASE GRILLE INSTRUCTIONS.** The two Leveling Screws are located on the bottom of the refrigerator on either side.
3. Insert a flat screwdriver in slots to adjust the Leveling Screws. Turn the leveling screw clockwise to raise the side of the refrigerator or counterclockwise to lower it. It may take several turns of the Leveling Screw to adjust the tilt of the refrigerator.

NOTE: Having someone push against the top of the refrigerator takes some of the weight off the Leveling Screws. This makes it easier to adjust the screws.

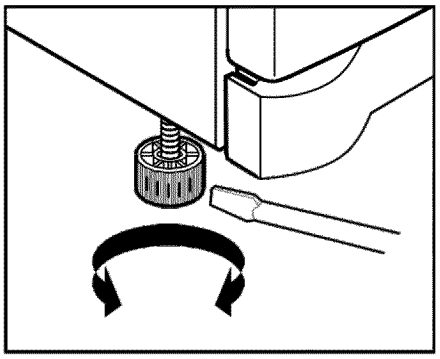

4. Open both doors again and check to make sure that they close easily. If not, tilt the refrigerator slightly more to the rear by turning both Leveling Screws clockwise. It may take several more turns, and you should turn both Leveling Screws the same amount.
5. Replace the base grille.

Place level tool on refrigerator shelf as shown below to check if unit is level.

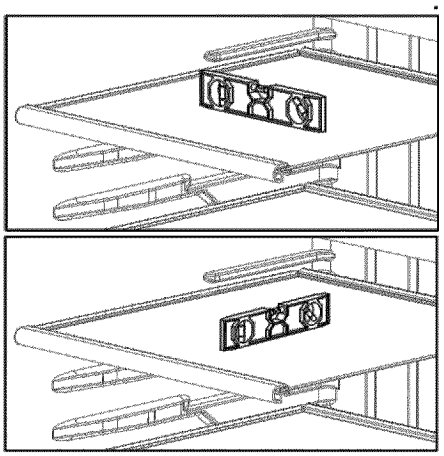

DOOR ALIGNMENT

If the space between your doors is uneven, follow the instructions below to align the doors:

1. Gently pry off the refrigerator door Top Hinge Cover with a flat head screwdriver and remove. Loosen the Top Hinge Bolts using a 10mm or 13/32-in. Socket wrench or open-end wrench.
2. Have someone hold the freezer door so the space between the two doors is even, and retighten the top hinge bolts.
3. Replace the Top Hinge Cover.

ENSURING PROPER AIR CIRCULATION

In order to ensure proper temperatures, air must flow between the refrigerator and freezer sections. As shown in the illustration below, cool air enters through the bottom of the freezer section and moves up. Most of the air then flows through the freezer section vents and recirculates under the freezer floor. The rest of the air enters the refrigerator section through the top vent.

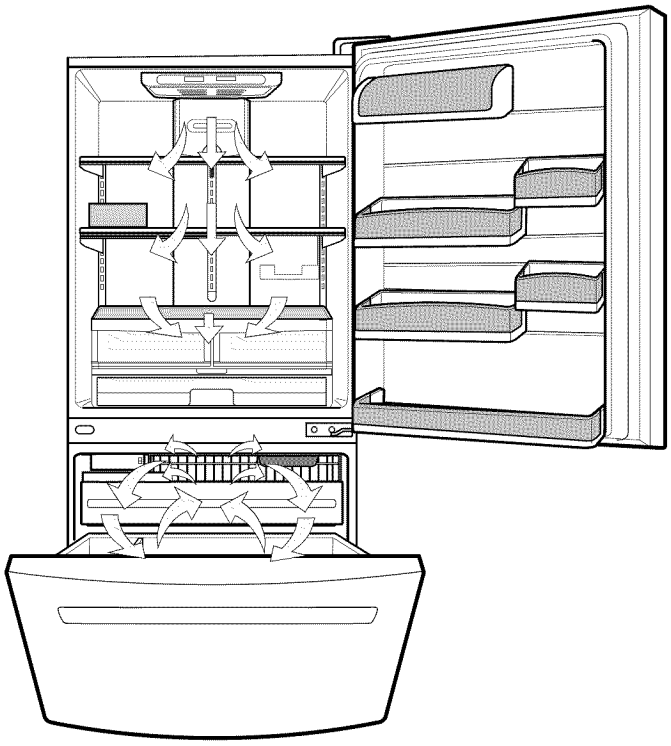

Do not block any of these vents with food packages. If the vents are blocked, airflow will be interrupted and temperature and moisture problems may occur.

IMPORTANT: Because air circulates between both sections, any odors formed in one section will transfer to the other. You must thoroughly clean both sections to eliminate odors. To prevent odor transfer and drying out of food, wrap or cover foods tightly. (See the **Food Storage Guide** section for details.)

DOOR ALARM

With this feature you will hear an alarm when the freezer or refrigerator door is not closed within 1 minute after it is opened. These tones repeat every 30 seconds.

The alarm is cancelled when the freezer or the refrigerator is closed correctly.

SETTING THE CONTROLS

- Your refrigerator has two controls that let you regulate the temperature in the freezer and refrigerator compartments.
- Initially set the REFRIGERATOR CONTROL at 37 °F (3 °C) and the FREEZER CONTROL at 0 °F (-18 °C). Leave it at this setting for 24 hours (one day) to stabilize. Then adjust the compartment temperature as desired.

▶ Identify your control type

- **Refrigerator control: 32 °F to 47 °F or 0 °C to 8 °C**
  The lower the number setting, the colder the refrigerator compartment will become.

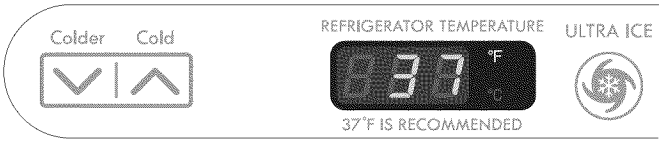

- **Freezer control: -6 °F to 8 °F or -21 °C to -13 °C**
  When the setting is at a lower number, the freezer compartment becomes colder.

- **Ultra Ice:**
  Press the Ultra Ice key and the LED will turn on. This function will remain activated for 24 hours and intensify the cooling speed of freezer and increase the amount of ice.

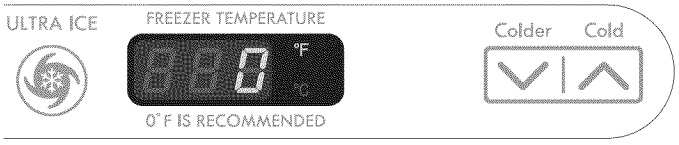

NOTE: To change from °F to °C, press and hold COLDER key of freezer and COLDER key of refrigerator for more than 1 second at the same time.

▶Identify your control type

- **Refrigerator control: position 1 to 7 (32 °F to 47 °F or 0 °C to 8 °C)**

  The higher the number setting, the colder the refrigerator compartment will become.

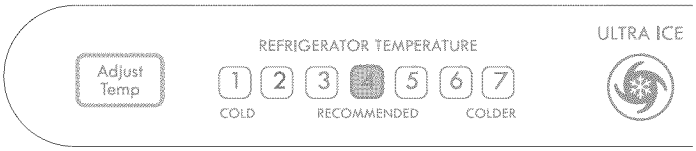

- **Freezer control: position 1 to 7 (-6 °F to 8 °F or -21 °C to -13 °C)**

  When the setting is at a higher number, the freezer compartment becomes colder.

- **Ultra Ice**

  Press the Ultra Ice key and the LED will turn on. This function will remain activated for 24 hours and intensify the cooling speed of freezer and increase the amount of ice.

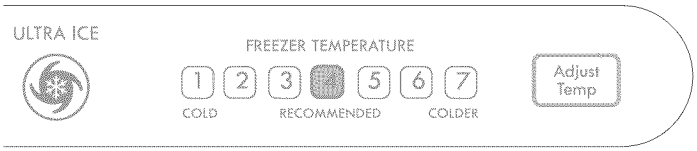

ADJUSTING CONTROL SETTINGS

Give the refrigerator time to cool down completely before adding food. It is best to wait 24 hours before you put food into the refrigerator for the first time. The mid-settings indicated in the previous section should be correct for normal Household refrigerator usage. The controls are set correctly When milk or juice is as cold as you like and when ice cream is firm.

The refrigerator control functions as the thermostat for the entire appliance (refrigerator and freezer sections.) The higher the number setting, the longer the compressor will run to keep the temperature colder. The freezer control adjusts the cold air flow from the freezer to the refrigerator. Setting the freezer control to a lower temperature keeps more cold air in the Freezer compartment to make it colder.

If you need to adjust temperatures in the refrigerator or freezer, start by adjusting the refrigerator first. Wait 24 hours after the refrigerator adjustment to check the freezer temperature. If it is too warm or too cold, then adjust the freezer control as well.

Use the settings listed in the chart below as a guide. **Always remember to wait at least 24 hours between adjustments.**

CONDITION/REASON:	RECOMMENDED ADJUSTMENT:
REFRIGERATOR section too warm • Door opened often • Large amount of food added • Room temperature very warm	**Turn REFRIGERATOR control to next higher number, wait 24 hours, then re-check**
FREEZER section too warm/ ice not made fast enough • Door opened often • Large amount of food added • Very cold room temperature (can't cycle often enough) • Heavy ice usage	**Turn FREEZER control to next higher number, wait 24 hours, Then re-check**
• Air vents blocked by items	**Move items out of airstream**
REFRIGERATOR section too cold • Controls not set correctly for your conditions	**Turn REFRIGERATOR control to next lower number, wait 24 hours, then re-check**
FREEZER section too cold • Controls not set correctly for your conditions	**Turn FREEZER control to next lower number, wait 24 hours, then re-check**

FOOD STORAGE GUIDE

Storing Fresh Food

Wrap or store food in the refrigerator in airtight and moisture-proof material unless otherwise noted. This prevents food odor and taste transfer throughout the refrigerator. For dated products, check date code to ensure freshness.

Butter or margarine

Keep opened butter in a covered dish or closed compartment. When storing an extra supply, wrap in freezer packaging and freeze.

Cheese

Store in the original wrapping until you are ready to use it. Once opened, rewrap tightly in plastic wrap or aluminum foil.

Milk

Wipe milk cartons. For best storage, place milk on interior shelf, not on door shelf.

Eggs

Store in original carton on interior shelf, not on door shelf.

Fruit

Wash, let dry, and store in refrigerator in plastic bags or in the crisper. Do not wash or hull berries until you are ready to use them. Sort and keep berries in their original container in a crisper, or store in a loosely closed paper bag on a refrigerator shelf.

Leafy vegetables

Remove store wrapping and trim or tear off bruised and discolored areas. Wash in cold water and drain. Place in a plastic bag or plastic container and store in the crisper.

Vegetables with skins (carrots,peppers)

Place in plastic bags or plastic container and store in crisper.

Fish

Use fresh fish and shellfish the same day purchased.

Chef fresh

Store most chef fresh in original wrapping as long as it is airtight and moisture-proof. Rewrap if necessary.

Leftovers

Cover leftovers with plastic wrap or aluminum foil. Plastic containers with tight lids can also be used.

STORING FROZEN FOOD

NOTE: For further information about preparing food for freezing or food storage times, check a freezer guide or a reliable cookbook.

Packaging

Successful freezing depends on correct packaging. When you close and seal the package, it must not allow air or moisture in or out. If you do, you could have food odor and taste transfer throughout the refrigerator and also dry out frozen food.

Packaging recommendations:

- Rigid plastic containers with tight-fitting lids
- Straight-sided canning/freezing jars
- Heavy-duty aluminum foil
- Plastic-coated paper
- Non-permeable plastic wraps
- Specified freezer-grade self-sealing plastic bags

Follow package or container instructions for proper freezing methods.

Do not use:

- Bread wrappers
- Non-polyethylene plastic containers
- Containers without tight lids
- Wax paper or wax-coated freezer wrap
- Thin, semi-permeable wrap

Freezing

IMPORTANT: Do not store bottles in the freezer compartment - they may break when frozen, causing damage.

Your freezer will not quick-freeze any large quantity of food. Do not put more unfrozen food into the freezer than will freeze within 24 hours (no more than 2 to 3 lbs or 0.91 kg to 1.36 kg of food per cubic foot of freezer space). Leave enough space in the freezer for air to circulate around packages. Be careful to leave enough room at the front so The door can close tightly.

Storage times will vary according to the quality and type of food, the type of packaging or wrap used (airtight and moisture-proof) and the storage temperature. Ice crystals inside a sealed package are normal. This simply means that moisture in the food and air inside the package have condensed, creating ice crystals.

NOTE: Allow hot foods to cool at room temperature for 30 minutes, then package and freeze. Cooling hot foods before freezing saves energy.

NOTE: Do not store food near the sensor; it may cause the sensor to malfunction.

REFRIGERATOR SHELVES

The shelves in your refrigerator are adjustable to meet your individual storage needs. These units are all glass shelves.

Storing similar food items together in your refrigerator and adjusting the shelves to fit different heights of items will make finding the exact item you want easier; it will also reduce the amount of time the refrigerator door is open, saving energy.

IMPORTANT: Do not clean glass shelves with warm water when they are cold. Shelves may break if exposed to sudden temperature changes or impact, such as bumping. For your protection, glass shelves are made with tempered glass, which will shatter into small pebble-sized pieces.

NOTE: Glass shelves are heavy. Use special care when removing them to avoid dropping them.

Adjusting Shelves

Remove shelves from the shipping position and replace shelves in the position you want.

- **To remove a shelf** : Tilt up the front of the shelf in the direction of (1) and lift it in the direction of (2). Pull the shelf out.
- **To replace a shelf** : Tilt the front of the shelf up and guide the shelf hooks into the slots at a desired height. Then lower the front of the shelf so that the hooks drop into the slots.

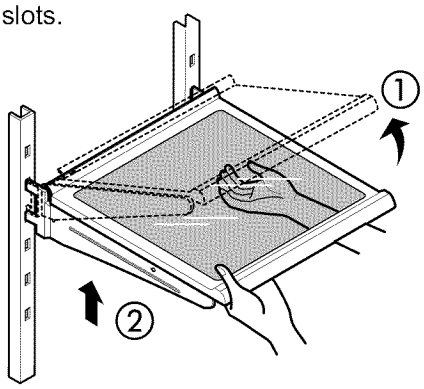

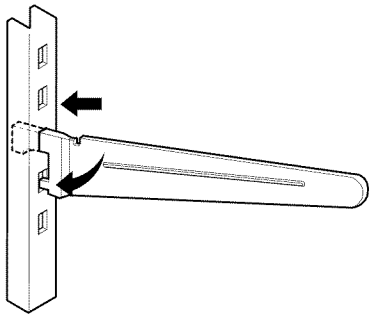

NOTE: Make sure that shelves are level from one side to the other. Failure to do so may result in the shelf falling or spilling food.

Sliding Out Shelves (optional on some models)

You can slide some glass shelves in and out of your refrigerator as follows.

- **To slide the shelf out,** carefully pull front of shelf toward you.
- **To slide shelf in,** push shelf in until it stops.

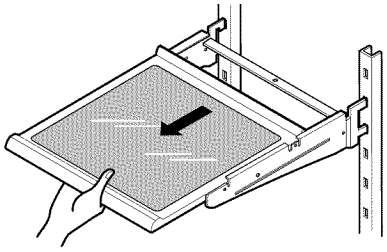

To remove a sliding shelf from its metal frame:

1. Pull the shelf out to the stop position.
2. Tilt the front of the shelf up and pull it past the stop position.
3. Lift up the shelf to remove.

To replace shelf:

1. With front of shelf tilted up, place rear of shelf onto brackets at point past stop position.
2. Slide shelf fully back. 3. Lower front of shelf into place.

Convenience Shelves (optional on some models)

- **Folding Shelf:** You can store taller items such as gallon containers or bottles by simply sliding the shelf back.

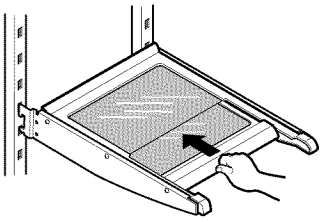

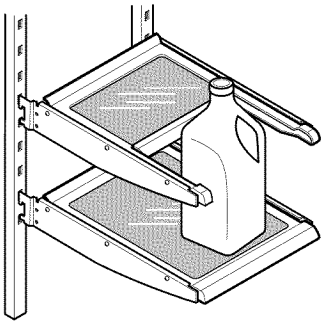

REFRIGERATOR FEATURES
(For Freezer Drawer Models)

PANTRY
(on some models)

Adjust the control to desired temperature by moving from COLD to COLDER.
Pull forward to open. Lift slightly and pull it out to remove.

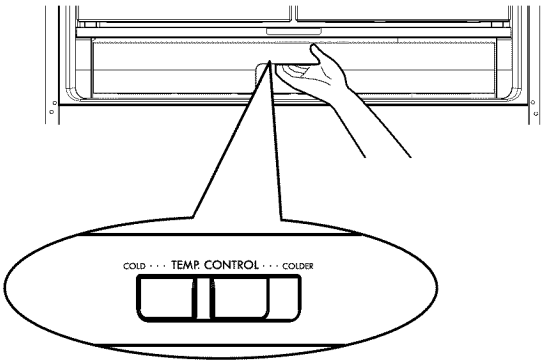

CRISPER HUMIDITY CONTROL
(on some models)

You can control the amount of humidity in the moisture-sealed crispers. Adjust the control to any setting between "FRUIT" and "VEGETABLE".

"FRUIT" Lets moist air out from crisper for best storage of fruits.
"VEGETABLE" Keeps moist air in crisper for best storage of fresh, leafy vegetables.

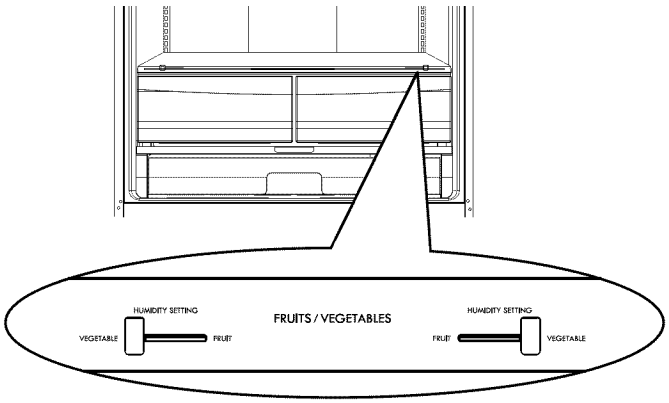

To remove the crisper:

1. Slide crisper straight out to the stop.
2. Lift the front of the crisper, then pull it out to remove.
3. Replace the crisper by sliding it back in fully past the drawer stop.

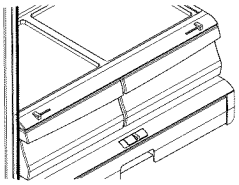

⚠ **WARNING:** Be careful when handing glass cover since glass is not attached to cover.

To remove the glass:

1. Lift up the glass after inserting a screwdriver under the crisper cover.
2. Pull glass cover up and out.

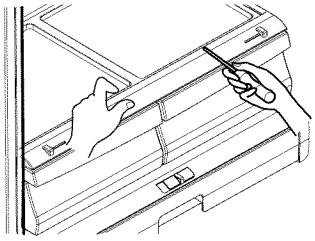

To remove the crisper cover support:

NOTE: Remove glass before removing the crisper cover support.

While holding the crisper cover support with both hands (as shown in the image below). Pull forward and slightly lift the front part.

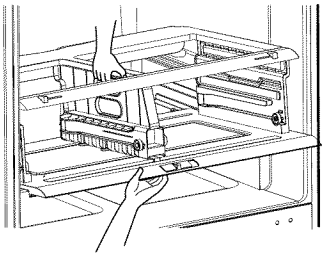

REFRIGERATOR FEATURES (For Freezer Swing Models)

CHEF FRESH / SNACK PAN (on some models)

While holding the chef fresh with one hand, pull it forward slightly. Lift slightly and pull it out.

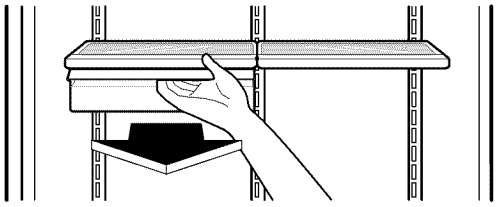

CRISPER HUMIDITY CONTROL (on some models)

You can control the amount of humidity in the moisture-sealed crispers. Move the slide above each crisper up for fruit or down for vegetables.

"FRUIT" Lets moist air out from crisper for best storage of fruits.
"VEGETABLE" Keeps moist air in crisper for best storage of fresh, leafy vegetables.

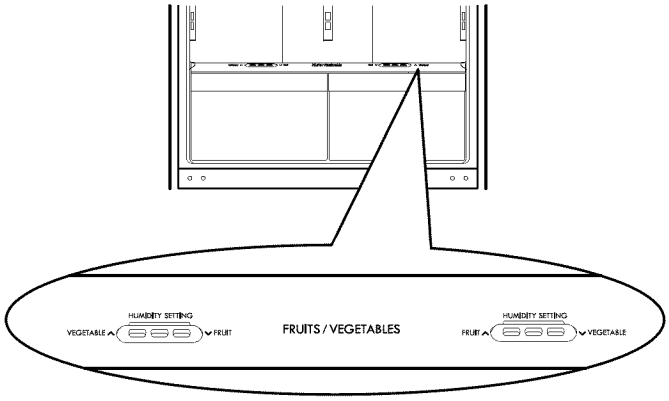

To remove the crisper:

1. Slide crisper straight out to the stop.
2. Lift the front of the crisper, then pull it out to remove.
3. Replace the crisper by sliding it back in fully past the drawer stop.

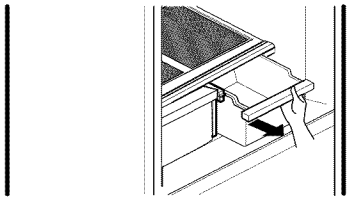

To remove the glass:

1. Lift up the glass by pushing up the back part using your hand.
2. Pull up and out.

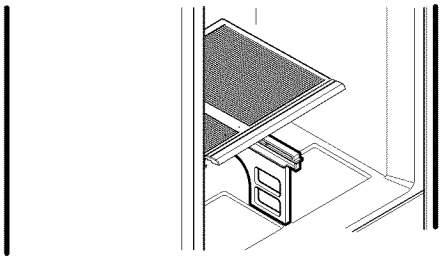

CRISPER COVER WITH LATTICE ON INNER SURFACE (on some models)

To remove the crisper cover:

1. Remove both crisper drawers.
2. While holding the crisper cover support (2), pull the cover up and out (1).

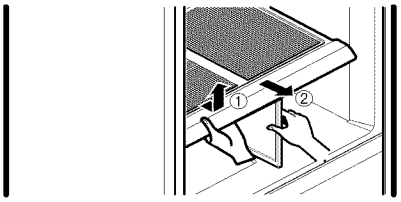

⚠ **WARNING:** Be careful when handing glass cover since glass is not attached to cover.

DOOR RACKS

The door racks may be removed for easier cleaning.

Snap-on Door Racks

To remove the racks:

1. Remove all items in the door racks.
2. Push the rack against the inside wall of the door (A) and lift up on door rack (B).

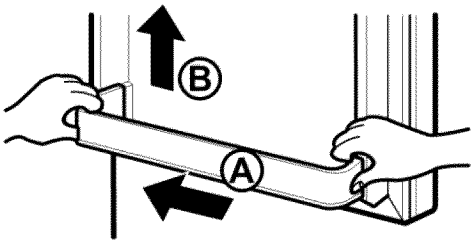

To replace the racks:

1. Hold either end of the door rack against the inside wall of the door.
2. Push down on rack until it locks in place.

DOOR BINS

1. Bins can be moved to either side of the door.

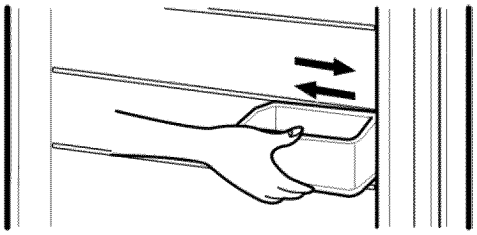

2. **To remove the bin,** simply lift the bin and pull straight out.

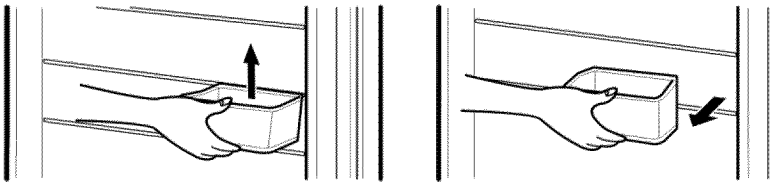

3. **To replace the bin,** slide it in above the desired support and push down until it locks completely so that a “click” sound is heard

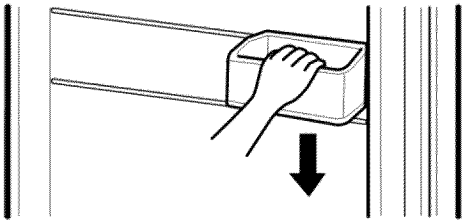

4. **If moving bins to lowest position**, be especially sure to secure them in place so that they don't fall out of the door.

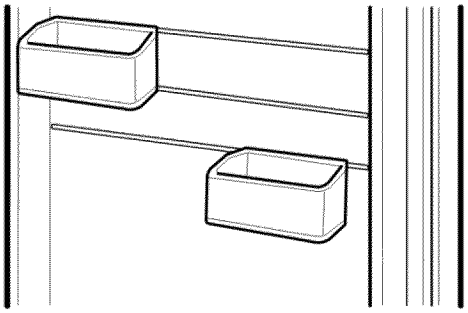

⚠ **WARNING:** Somebody can be hurt if door bins are not firmly assembled.

NOTE: Do not adjust a bin that is loaded with food.

DAIRY BIN

1. **To remove the dairy bin**, simply lift it and pull straight out.
2. **To replace the dairy bin,** slide it in above the desired location and push down until it stops.

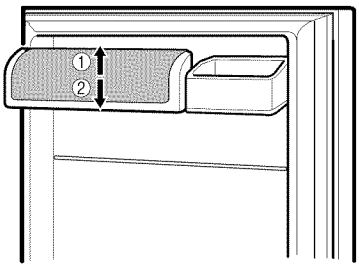

EGG BOX (on some models)

Store Egg Box on interior shelf, not on door shelf.

⚠ **CAUTION:** Do not use the egg box as an ice storage bin in the freezer compartment. The egg box can easily easily break if it freezes.

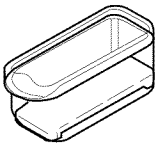

FREEZER SECTION

ICE BIN (on some models)

1. To separate the ice bin, pull out the drawer as much as possible.
2. Gently lift and pull out the ice bin.
3. To reinstall, pull out the drawer as much as possible and set the ice bin in its correct position, and then push in the drawer.

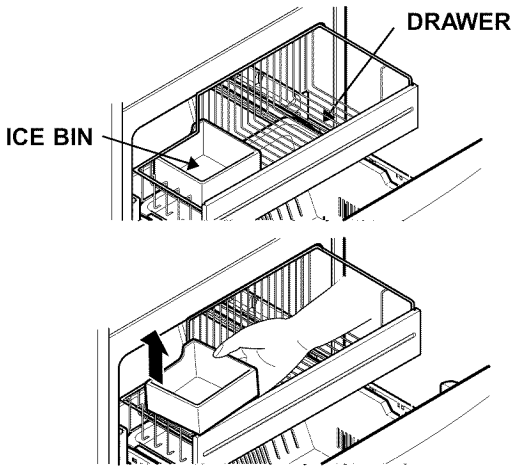

DURABASE (on some models)

1. To remove the Durabase, push it back to the end as much as possible. Tilt up the front of the Durabase and pull straight out.
2. To install, insert the Durabase in rail assembly.

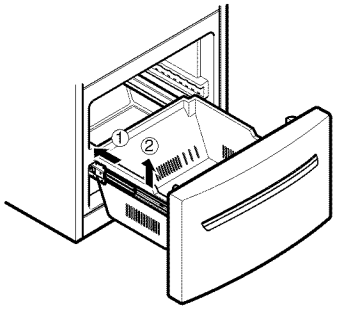

DURABASE DIVIDER (on some models)

The Durabase divider allows you to organize the Durabase area into sections.

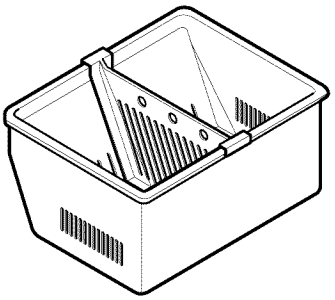

⚠ **WARNING:** There is enough open space in the Durabase drawer for a child or pet to climb inside. To prevent accidental child and pet entrapment and suffocation risk, DO NOT allow them to play inside of Durabase drawer.

GLIDE-OUT DRAWER BASKET (on some models)

1. To remove, lift basket up and pull out straight out.

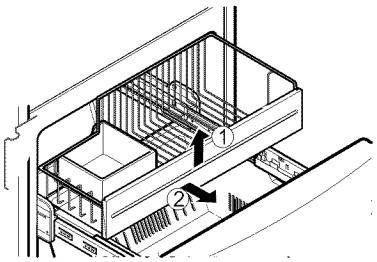

2. To Install, pull both rails out to full extension. Hook the basket supports into the rail tabs and push to the back of compartment.

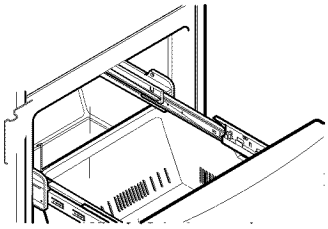

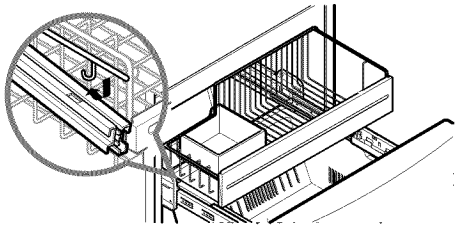

TILTING DOOR (on some models)

The tilting door provides easy access to stored foods.

How to use:
Tilt the door down and pull it out.

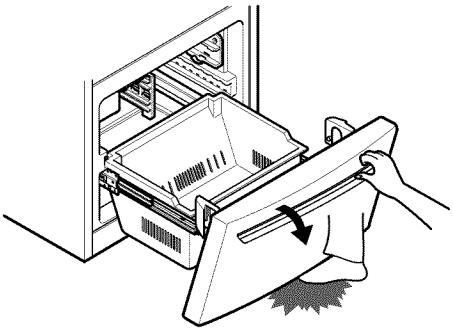

⚠ **WARNING:** Be careful when you open tilting door so that you do not injure your foot!

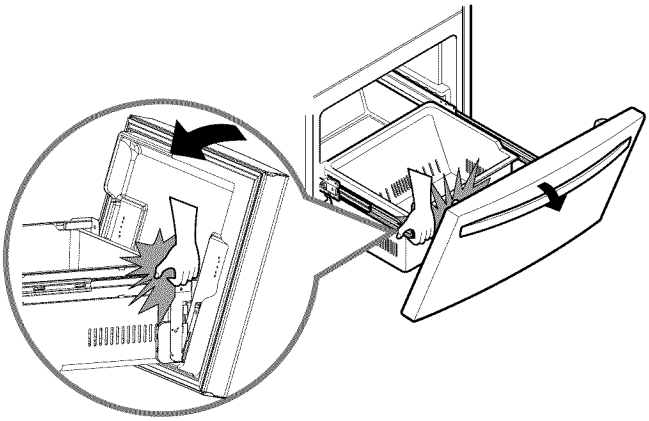

⚠ **WARNING:** To avoid hand injury, keep your hands away from tilting device when drawer is open.

WIRE DURABASE (on some models)

1. To remove wire Durabase, pull it out to full extension. Tilt up the front of the wire Durabase and pull it straight out.
2. To install, insert the wire Durabase into frame rails and push back into place.

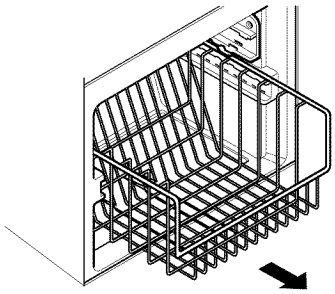

FREEZER SHELF (on some models)

To remove shelf, grasp it at the front and pull it towards you.

To replace the shelf, simply push it back into place.

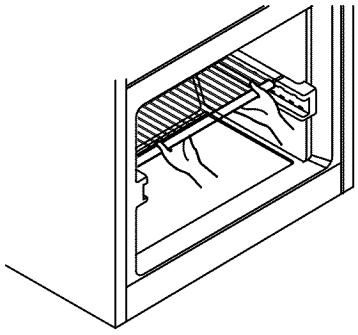

⚠ WARNING

Explosion Hazard

Use non-flammable cleaner.

Failure to do so can result in death, explosion, or fire.

Both the refrigerator and freezer sections defrost automatically. However, clean both sections about once a month to prevent odors. Wipe up spills immediately.

GENERAL CLEANING TIPS

- Unplug refrigerator or disconnect power.
- Remove all removable parts, such as shelves, crispers, etc.
- Use a clean sponge or soft cloth and a mild detergent in warm water. Do not use abrasive or harsh cleaners.
- Hand wash, rinse and dry all surfaces thoroughly.
- Plug in refrigerator or reconnect power.

OUTSIDE

Waxing external painted metal surfaces helps provide rust protection. Do not wax plastic parts. Wax painted metal surfaces at least twice a year using appliance wax (or auto paste wax). Apply wax with a clean, soft cloth.

For products with a stainless steel exterior, use a clean sponge or soft cloth and a mild detergent in warm water. Do not use abrasive or harsh cleaners. Dry thoroughly with a soft cloth.

Note: Avoid door surface contact with chemical products that contain Phosphate or Chlorine.

INSIDE WALLS (allow freezer to warm up so cloth will not stick)

To help remove odors, you can wash the inside of the refrigerator with a mixture of baking soda and warm water. Mix 2 tablespoons baking soda to 1 quart of water (26 g soda to 1 liter water). Be sure the baking soda is completely dissolved so does it not scratch the surfaces of the refrigerator.

DOOR LINERS AND GASKETS

Do not use cleaning waxes, concentrated detergent, bleaches, or cleaners containing petroleum on plastic refrigerator parts.
Use a clean sponge or soft cloth and a mild detergent in warm water. Wash, rinse and dry all surfaces thoroughly.

PLASTIC PARTS (covers and panels)

Do not use windows sprays, abrasive cleaners, or flammable fluids. These can scratch or damage the material. Use a clean sponge or soft cloth and a mild detergent in warm water. Wash, rinse and dry all surfaces thoroughly.

BACK COVER

⚠ WARNING

ELECTRICAL SHOCK HAZARD

Before you begin, either unplug the refrigerator or turn off power at the circuit breaker or fuse box. Failure to do so could result in death or serious injury.

NOTE: Back cover should only be removed by a qualified technician.

Clean the vents on the back cover. Use a vacuum cleaner with the brush attachment, at least twice a year to keep your refrigerator working efficiently.

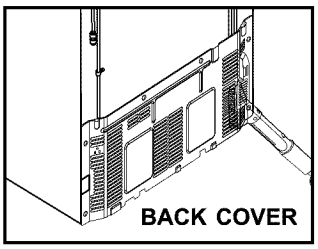

LIGHT BULB REPLACEMENT

⚠ WARNING

Electrical Shock Hazard

Before replacing a burned-out light bulb, either unplug the refrigerator or turn off power at the circuit breaker or fuse box.

NOTE: Moving the control to the OFF position does not remove power to the light circuit.

NOTE: Not all appliance bulbs will fit your refrigerator. Be sure to replace the bulb with one of the same size, shape and wattage.

NOTE: The light bulbs will turn off if door is left open for seven continuous minutes. Shutting door for one second will make light bulbs come back on.

To change the refrigerator light:

1. Unplug the power cord from the outlet.
2. Remove refrigerator shelves.
3. Release the hooks on the front of the light shield with the help of a flat screwdriver and pull the shield down to remove it.

4. Turn the bulb counter clockwise.

5. To assemble, first insert the hooks at the back and then push up the light shield.

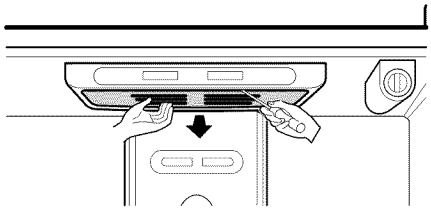

To change the freezer light:

1. Unplug refrigerator or disconnect power.
2. Reach behind light shield to remove bulb.
3. Replace bulb with a 60-watt appliance bulb.
4. Plug in refrigerator or reconnect power.

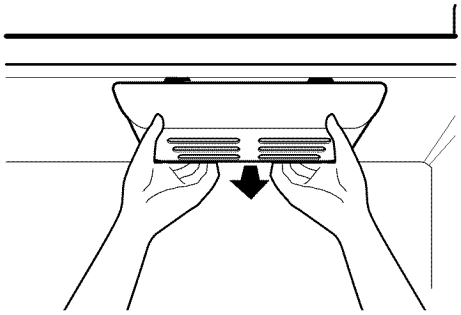

POWER INTERRUPTIONS

If the electricity goes off, call the power company and ask how long it will be off.

1. If the power will be out for 24 hours or less, keep both refrigerator doors closed to help foods stay cold and frozen.
2. If the power will be out for more than 24 hours:

   a) Remove all frozen food and store it in a frozen food locker.

   OR

   b) Place 2 lbs of dry ice in the freezer for every cubic foot of freezer space. This will keep the food frozen for two to four days. While handling dry ice, wear gloves to protect your hands from frostbite.

   OR

   c) If neither a food locker nor dry ice is available, consume or can perishable food at once.

WHEN YOU GO ON VACATION

If you choose to leave the refrigerator on while you are away, follow these steps to prepare your refrigerator before you leave.

1. Use up any perishables and freeze other items.
2. Empty the ice bin.

If you choose to turn the refrigerator off before you leave, follow these steps.

1. Remove all food from the refrigerator.
2. Depending on your model, set the thermostat control (refrigerator control) to OFF. See the **Setting the Controls** section.
3. Clean refrigerator, wipe it and dry well.
4. Tape rubber or wood blocks to the tops of both doors to prop them open far enough for air to get in. This stops odor and mold from building up.

WHEN YOU MOVE

When you are moving your refrigerator to a new home, follow these steps to prepare it for the move.

1. Remove all food from the refrigerator and pack all frozen food in dry ice.
2. Depending on your model, turn the thermostat control (refrigerator control) to OFF. See the **Setting the Controls** section.
3. Unplug the refrigerator.
4. Empty water from the defrost pan.
5. Clean, wipe and dry thoroughly.
6. Take out all removable parts, wrap them well and tape them together so they don't shift and rattle during the move.
7. Depending on the model, raise the front of the refrigerator so it rolls more easily OR screw in the leveling legs all the way so they don't scrape the floor. See the **Door Closing** section.
8. Tape the doors shut and tape the power cord to the refrigerator cabinet.

When you get to your new home, put everything back and refer to the **Installing Your Refrigerator** section for preparation instructions.

ICEMAKER

NOTE: Automatic Ice Maker feature is included only in certain models. Please check your product specification.

⚠ WARNING

Personal Injury Hazard

Avoid contact with the moving parts of the ejector mechanism, or with the heating element that releases the cubes. DO NOT place fingers or hands on the automatic icemaking mechanism while the refrigerator is plugged in.

A newly-installed refrigerator may take 12 to 24 hours to begin making ice.

►Identify your icemaker type

Type 1

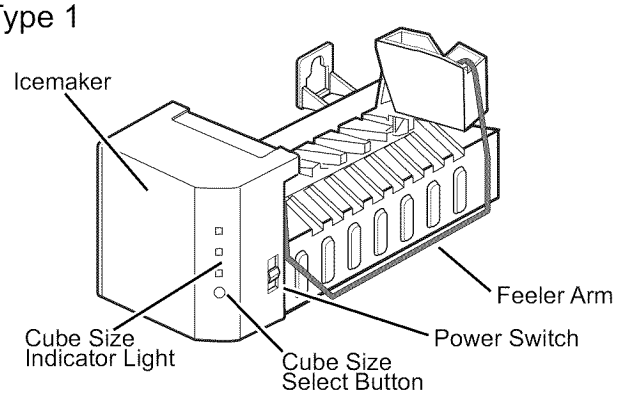

This icemaker will produce eight cubes per cycle—approximately 100–130 cubes in a 24-hour period, depending on freezer compartment temperature, room temperature, number of door openings and other operating conditions.

NOTE: If the cube size is smaller or larger than you expected, you can regulate the size with the cube size button.

Every time you press the cube size button, the indicator moves up one light. The higher the light position, the larger the cubes will be. Pressing at highest position returns indicator to lowest position.

Type 2

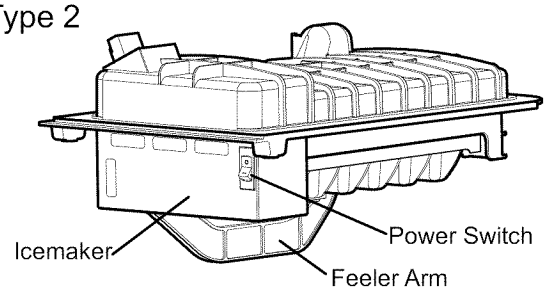

This type of icemaker will produce twelve cubes per cycle approximately 80–100 cubes in a 24-hour period, depending on freezer compartment temperature, room temperature, number of door openings and other operating conditions.

If the refrigerator is used before the water connection is made to the icemaker, set the power switch to **O (off)**.

When the refrigerator has been connected to the water supply, set the power switch to **I (on)**.

The icemaker will fill with water only when it cools to freezing. A newly-installed refrigerator may take 12 to 24 hours to begin making ice cubes.

Throw away the first few batches of ice to allow the water line to clear.

Be sure nothing interferes with the sweep of the feeler arm.

When the bin fills to the level of the feeler arm, the icemaker will stop producing ice.

It is normal for some cubes to be stuck together.

If ice is not used frequently, old ice cubes will become cloudy, taste stale, and shrink.

WHEN YOU SHOULD SET THE ICEMAKER POWER SWITCH TO O (OFF)

- When the water supply will be shut off for several hours.
- When the ice storage bin is removed for more than a minute or two.
- When the refrigerator will not be used for several days.

NORMAL SOUNDS YOU MAY HEAR

- The icemaker water valve will buzz as the icemaker fills with water. If the power switch is in the **I (on)** position, it will buzz even if it has not yet been hooked up to water. To stop the buzzing, move the power switch to **O (off)**. **NOTE:** Keeping the power switch in the **I (on)** position before the water line is connected can damage the icemaker.
- You will hear the sound of cubes dropping into the bin and water running in the pipes as the icemaker refills.

PREPARING FOR VACATION

Set the icemaker power switch to **O (off)** and shut off the water supply to the refrigerator.

If the surrounding air temperature will drop below freezing, have a qualified servicer drain the water supply system to prevent serious property damage due to flooding from ruptured water lines or connections.

CONNECTING THE WATER LINE

NOTE: Water line installation is needed when the Automatic Icemaker and/or Water Dispenser features are available on your product.

BEFORE YOU BEGIN

This water line installation is not warranted by the refrigerator or icemaker manufacturer. Follow these instructions carefully to minimize the risk of expensive water damage.

Water hammer (water banging in the pipes) in house plumbing can cause damage to refrigerator parts and lead to water leakage or flooding. Call a qualified plumber to correct water hammer before installing the water supply line to the refrigerator.

To prevent burns and product damage, do not hook up the water line to the hot water line.

If you use your refrigerator before connecting the water line, make sure the icemaker power switch is in the **O (off)** position.

Do not install the icemaker tubing in areas where temperatures fall below freezing.

When using any electrical device (such as a power drill) during installation, be sure the device is double-insulated or grounded in a manner to prevent the hazard of electric shock, or is battery-powered.

All installations must be in accordance with local plumbing code requirements.

NOTE: Wear eye protection.

• If a **reverse osmosis water filtration system** is connected to your cold water supply, This water line installation is not warranted by the refrigerator or icemaker manufacturer. Follow next instructions carefully to minimize the risk of expensive water damage.
• If a **reverse osmosis water filtration system** is connected to your cold water supply, the water pressure to the reverse osmosis system needs to be a minimum of 40 to 60 PSI or 0.27 MPa to 0.41MPa (2.8 kg·f/cm² ~ 4.2 kg·f/cm², less than 2 ~ 3 seconds to fill a cup of 7 oz capacity [0.2 liters]).
If the water pressure from the reverse osmosis system is less than 21 PSI or 0.14 MPa (1.5 kg·f/cm², more than 4 seconds to fill a cup of 7 oz capacity [0.2 liters]).
• Check to see whether the sediment filter in the reverse osmosis system is blocked. Replace the filter if necessary.
• Allow the storage tank on the reverse osmosis system to refill after heavy usage.
• If the issue about water pressure from reverse osmosis remains, call a licensed, qualified plumber.

WHAT YOU WILL NEED

- **Copper Tubing**, 1/4" outer diameter to connect the refrigerator to the water supply. Be sure both ends of the tubing are cut square.

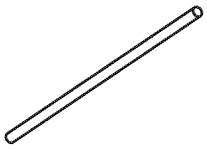

To determine how much tubing you need: measure the distance from the water valve on the back of the refrigerator to the water supply pipe. Then add 8 feet (2.4 m). Be sure there is sufficient extra tubing (about 8 feet [2.4 m] coiled into 3 turns of about 10 [25 cm] diameter) to allow the refrigerator to move out from the wall after installation.

Be sure that the kit you select allows at least 8 feet (2.4 m) as described above.

- **A cold water supply**.The water pressure must be between 20 and 120 PSI or 0.137 and 0.82 MPa on models without a water filter and between 40 and 120 PSI or 0.275 and 0.82 MPa on models with a water filter.
- **Power drill.**
- **1/2"** or adjustable wrench .
- **Straight- and Phillips-blade screwdriver**

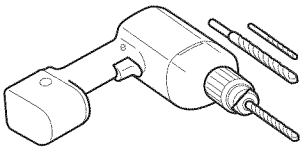

- **Two 1/4" outer diameter compression nuts and 2 ferrules (sleeves)** to connect the copper tubing to the shutoff valve and the refrigerator water valve.

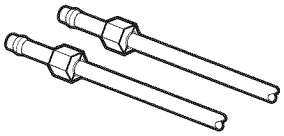

- If your existing copper water line has a flared fitting at the end, you will need an **adapter** (available at plumbing supply stores) to connect the water line to the refrigerator OR you can cut off the flared fitting with a tube cutterand then use a compression fitting.

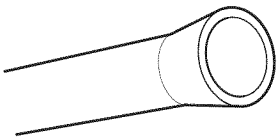

- **Shut off valve to connect to the cold water line**. The shutoff valve should have a water inlet with a minimum inside diameter of 5/32" at the point of connection to the COLD WATER LINE. Saddle-type shutoff valves are included in many water supply kits. Before purchasing, make sure a saddle-type valve complies with your local plumbing codes.

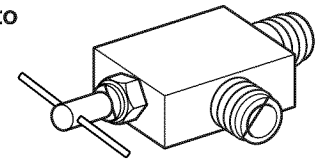

INSTALLATION INSTRUCTIONS

Install the shutoff valve on the nearest frequently used drinking water line.

1. SHUT OFF THE MAIN WATER SUPPLY

Turn on the nearest faucet to relieve the pressure on the line.

INSTALLATION INSTRUCTIONS (CONTINUED)

2. CHOOSE THE VALVE LOCATION

Choose a location for the valve that is easily accessible. It is best to connect into the side of a vertical water pipe. When it is necessary to connect into a horizontal water pipe, make the connection to the top or side, rather than at the bottom, to avoid drawing off any sediment from the water pipe.

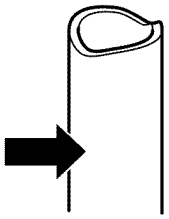

3. DRILL THE HOLE FOR THE VALVE

Drill a 1/4" hole in the water pipe (even if using a self-piercing valve) using a sharp bit. Remove any burrs resulting from drilling the hole in the pipe. Take care not to allow water to drain into the drill. Failure to drill a 1/4 hole may result in reduced ice production or smaller cubes.

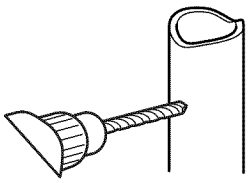

4. FASTEN THE SHUT OFF VALVE

Fasten the shutoff valve to the cold water pipe with the pipe clamp.

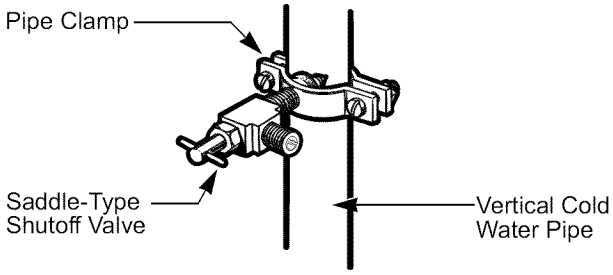

NOTE: Commonwealth of Massachusetts Plumbing Codes 248CMR shall be adhered to. Saddle valves are illegal and use is not permitted in Massachusetts. Consult with your licensed plumber.

5. TIGHTEN THE PIPE CLAMP

Tighten the clamp screws until the sealing washer begins to swell.

NOTE: Do not overtighten or you may crush the tubing.

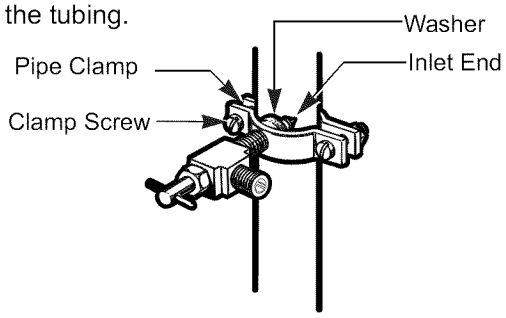

6. ROUTE THE TUBING

Route the tubing between the cold water line and the refrigerator.

Route the tubing through a hole drilled in the wall or floor (behind the refrigerator or adjacent base cabinet) as close to the wall as possible.

NOTE: Be sure there is sufficient extra tubing (about 8 feet coiled into 3 turns of about 10 diameter) to allow the refrigerator to move out from the wall after installation.

7. CONNECT THE TUBING TO THE VALVE

Place the compression nut and ferrule (sleeve) for copper tubing onto the end of the tubing and connect it to the shutoff valve. Make sure the tubing is fully inserted into the valve. Tighten the compression nut securely.

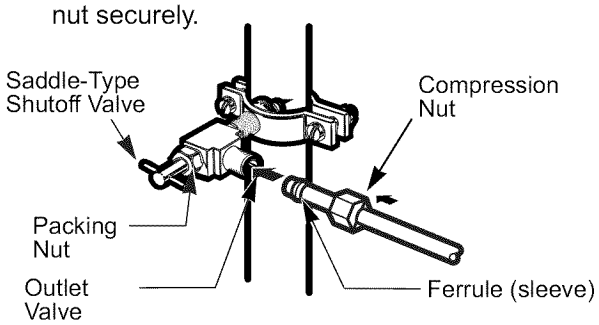

NOTE: Commonwealth of Massachusetts Plumbing Codes 248CMR shall be adhered to. Saddle valves are illegal and use is not permitted in Massachusetts. Consult with your licensed plumber.

8. FLUSH OUT THE TUBING

Turn the main water supply on and flush out the tubing until the water is clear.

Shut the water off at the water valve after about one quart of water has been flushed through the tubing.

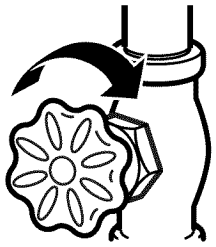

9. CONNECT THE TUBING TO THE REFRIGERATOR

NOTES:

- Before making the connection to the refrigerator, be sure the refrigerator power cord is not plugged into the wall outlet.
- If your refrigerator does not have a water filter, we recommend installing one if your water supply has sand or particles that could clog the screen of the refrigerator's water valve. Install the filter in the water line near the refrigerator.

IMPORTANT: Do not use old, worn or used waterlines, only use new for a better use and service.
Connect only to the supply of drinking water for your safety and health.

Remove the plastic flexible cap from the refrigerator connection.

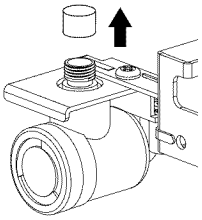

Place the compression nut and ferrule (sleeve) onto the end of the tubing.

Insert the end of the tubing into the connection as far as possible. While holding the tubing, tighten the fitting.

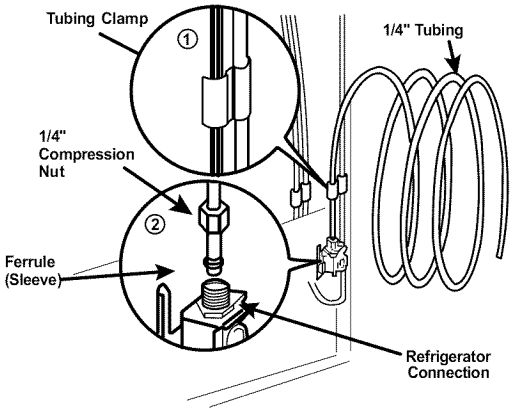

Fasten the tubing into the Tubing Clamp attached to the back of the refrigerator.
First, loosen the screw fastening the clamp. Next, insert the tubing in the groove. Finally, re-fasten the screw.

10. TURN THE WATER ON AT THE SHUT OFF VALVE

Tighten any connections that leak.

Reattach the compressor compartment access cover.

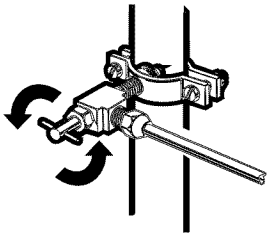

11. PLUG IN THE REFRIGERATOR

Arrange the coil of tubing so that it does not vibrate against the back of the refrigerator or against the wall. Push the refrigerator back to the wall.

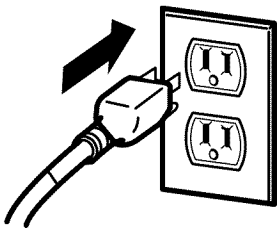

12. START THE ICEMAKER

Set the icemaker power switch to the **ON** position. The icemaker will not begin to operate until it reaches its operating temperature of 17°F (-8°C) or below. It will then begin operation automatically if the icemaker power switch is in the **I (on)** position.

UNDERSTANDING SOUNDS YOU MAY HEAR

Your new refrigerator may make sounds that your old one didn't make. Because the sounds are new to you, you might be concerned about them. Most of the new sounds are normal. Hard surfaces, like the floor, walls and cabinets, can make the sounds seem louder than they actually are. The following describes the kinds of sounds and what may be making them.

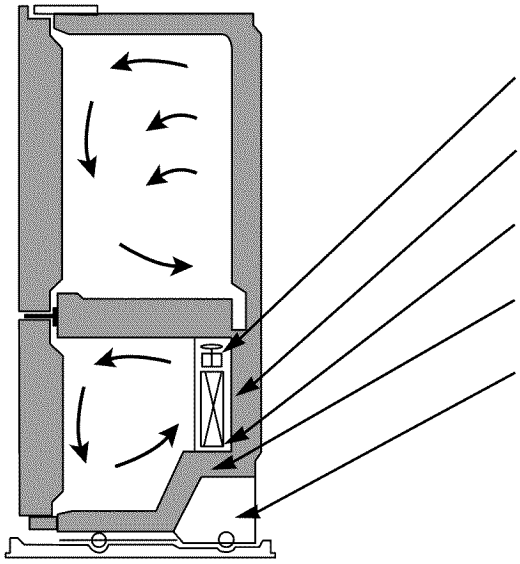

- The defrost timer will click when the automatic defrost cycle begins and ends. The thermostat control (or refrigerator control, depending on the model) will also click when cycling on and off.
- Rattling noises may come from the flow of refrigerant, the water line, or items stored on top of the refrigerator.
- Your refrigerator is designed to run more efficiently to keep your food items at the desired temperature. The high efficiency compressor may cause your new refrigerator to run longer than your old one, and you may hear a pulsating or high-pitched sound.
- You may hear the evaporator fan motor circulating the air through the refrigerator and freezer compartments.
- As each cycle ends, you may hear a gurgling sound due to the refrigerant flowing in your refrigerator.
- Contraction and expansion of the inside walls may cause a popping noise.
- Water dripping on the defrost heater during a defrost cycle may cause a sizzling sound.
- You may hear air being forced over the condenser by the condenser fan.
- You may hear water running into the drain pan during the defrost cycle.

REFRIGERATOR DOES NOT OPERATE

Check if...	Then...
The power supply cord is unplugged.	Firmly plug the cord into a live outlet with proper voltage.
A household fuse has blown or circuit breaker tripped.	Replace the fuse or reset the circuit breaker.
The refrigerator control is set to the OFF position.	If word OFF is in the Freezer and Refrigerator Display, hold COLDER key on refrigerator over 3 sec.
Refrigerator is in the defrost cycle.	Wait about 30 minutes for defrost cycle to end.
Display shows the word OFF.	The refrigerator has been put into the store Demo (Demonstration) Mode. The Demonstration Mode disables the cooling system; only the lamps and display work normally. To disable press any of the **cold** buttons for 5 seconds.
The control panel lights are blinking secuentially (1-2-3-4-5-6-7)	The refrigerator has been put into the store Demo (Demonstration) Mode. The Demonstration Mode disables the cooling system; only the lamps and display work normally. To disable press **ULTRA ICE** and **Adjust Temp** buttons at the same time for 5 seconds.

VIBRATION OR RATTLING NOISE

Check if...	Then...
The refrigerator is not resting solidly on the floor.	Floor is weak or uneven or leveling legs need adjusting. See **Installation** Section.

COMPRESSOR MOTOR SEEMS TO RUN TOO MUCH

Check if...	Then...
The refrigerator that was replaced was an older model.	Modern refrigerators with more storage space require more operating time.
The room temperature is hotter than normal.	The motor will run longer under warm conditions. At normal room temperatures, expect your motor to run about 40% to 80% of the time. Under warmer conditions, expect it to run even more often.
The door is opened often or a large amount of food has just been added.	Adding food and opening the door warms the refrigerator. It is normal for the refrigerator to run longer in order to cool the refrigerator back down. Adding a large amount of food warms the refrigerator. See the **Food Storage Guide** Section. In order to conserve energy, try to get everything you need out of the refrigerator at once, keep food organized so it is easy to find and close the door as soon as the food is removed.
The refrigerator was recently plugged in and the refrigerator control was set correctly	The refrigerator will take up to 24 hours to cool completely.
The refrigerator control was not set correctly for the surrounding conditions.	See the **Adjusting control settings** Section.
The doors are not closed completely.	Push the doors firmly shut. If they will not shut all the way, see **Doors will not close completely** below.
The condenser coils are dirty.	This prevents air transfer and makes the motor work harder. Clean the condenser coils. Refer to the **Care and Cleaning** section.

DOORS WILL NOT CLOSE COMPLETELY

Check if...	Then...
The refrigerator is not level.	See the **Installation** Section to level refrigerator.
Food packages are blocking the door open.	Rearrange food containers to clear door and door shelves.
The ice bin, crisper cover, pans, shelves, door bins or baskets are out of position.	Push bins all the way in and put crisper cover, pans, shelves and baskets into their correct positions. See the **Using Your Refrigerator** Section.
The gaskets are sticking.	Clean gaskets and the surface that they touch. Rub a thin coat of paraffin wax on the gaskets after cleaning.
The refrigerator wobbles or seems unstable.	Level the refrigerator. Refer to the **Door Closing and Alignment** Section.
The doors were removed during product installation and not properly replaced.	Remove and replace the doors according to the **Removing, Reversing and Replacing Refrigerator Doors** section or call a qualified service technician.

FROST OR ICE CRYSTALS ON FROZEN FOOD

Check if...	Then...
The door is not closing properly.	See **Doors will not close completely** above.
The door is opened often.	When the door is opened, warm, humid air is allowed into the freezer resulting in frost.

TROUBLESHOOTING GUIDE

ICE HAS OFF-TASTE OR ODOR

Check if...	Then...
The icemaker was recently installed.	Discard first few batches of ice to avoid discolored or off-flavored ice.
The ice has been stored for too long.	Throw away old ice and make new supply.
Food has not been wrapped tightly in either compartment.	Rewrap foods since odors may migrate to the ice if food is not wrapped properly.
The water supply contains minerals such as sulfur.	A filter may need to be installed to eliminate taste and odor problems.
The interior of refrigerator needs cleaning.	See **Care and Cleaning** section.
Ice storage bin needs cleaning.	Empty and wash bin. Discard old cubes.

THERE IS WATER IN THE DEFROST DRAIN PAN

Check if...	Then...
The refrigerator is defrosting.	The water will evaporate. It is normal for water to drip into the defrost pan.
It is more humid than normal.	Expect that the water in the defrost pan will take longer to evaporate. This is normal when it is hot or humid.

THE REFRIGERATOR SEEMS TO MAKE TOO MUCH NOISE

Check if...	Then...
The sounds may be normal for your refrigerator.	Refer to the **Understanding Sounds You May Hear section.**

THE ICEMAKER IS NOT PRODUCING ICE OR ICE CUBES ARE FREEZING TOO SLOWLY

Check if...	Then...
The freezer temperature is cold enough to produce ice.	Wait 24 hours after hook-up for ice production. See the **Setting the Controls** Section.
Door left open.	Check to see if something is holding the door open.

CUBES PRODUCED BY ICEMAKER ARE TOO SMALL

Check if...	Then...
Water shutoff valve connecting refrigerator to water line may be clogged.	Call a plumber to clear the valve.

THE DOORS ARE DIFFICULT TO OPEN

Check if...	Then...
The gaskets are dirty or sticky.	Clean gaskets and the surfaces that they touch. Rub a thin coat of appliance polish or kitchen wax on the gaskets after cleaning
The door is reopened within a short time after having been opened.	When you open the door, warmer air enters the refrigerator. As the warm air cools, it can create a vacuum. If the door is hard to open, wait 5 minutes to allow the air pressure to equalize, then see if it opens more easily.

TROUBLESHOOTING GUIDE

AUTOMATIC ICEMAKER DOES NOT WORK

Check if...	Then...
Icemaker power switch in the **O (off)** position.	Move the switch to the **I (on)** position.
Water supply turned off or not connected.	See the **Connecting the Water Line** section.
Freezer compartment too warm.	Wait 24 hours for the freezer to reach its ideal temperature.
Piled up cubes in the storage bin cause the icemaker to shut off.	Level cubes by hand.

TEMPERATURE IS TOO WARM OR THERE IS INTERIOR MOISTURE BUILD UP

Check if...	Then...
The air vents are blocked. Cold air circulates from the freezer to the fresh food section and back again through air vents in the wall dividing the two sections.	Locate air vents by using your hand to sense airflow and move all packages that block vents and restrict airflow. Refer to **Multi-Flow**Section for the location of air vents.
The doors are opened often.	When the door is opened, warm humid air is allowed into the refrigerator. The more the door is opened, the faster the humidity builds up, and the more warm air the refrigerator must cool. In order to keep the refrigerator cool, try to get everything you need out of the refrigerator at once, keep food organized so it is easy to find and close the door as soon as the food is removed.
The control is not set correctly for the surrounding conditions.	Refer to the **Setting the Controls** Section. Wait 24 hours for temperatures to stabilize or even out. If the temperature is too cold or too warm, move the dial one number at a time.
A large amount of food has just been added to the refrigerator or freezer.	Adding food warms the refrigerator. It can take a few hours for the refrigerator to return to normal temperature.
The food is not packaged correctly.	Wrap food tightly and wipe off damp containers prior to storing in the refrigerator to avoid moisture accumulation. If necessary, repackage food according to the guidelines in the **Food Storage Guide** Section.
The doors are not closing completely.	See **Doors will not close completely.**
The weather is humid.	In humid weather, air carries moisture into refrigerator when doors are opened.
A self-defrost cycle was completed.	It is normal for droplets to form on the back wall after the refrigerator self-defrosts.

LIGHTS DO NOT WORK

Check if...	Then...
The power supply cord is unplugged.	Firmly plug the cord into a live outlet with proper voltage.
Light bulb is loose in the socket.	Turn the refrigerator control to the OFF position and unplug the refrigerator. Gently remove the bulb and reinsert. Then plug in refrigerator and reset the refrigerator control.
Light bulb has burned out.	Unplug the refrigerator prior to bulb replacement. Replace the old bulb with a new appliance bulb with same size and shape from your local hardware store. (See Changing the Light Bulb Section).

Get it fixed, at your home or ours!

Your Home

For expert troubleshooting and home solutions advice:

manage my home

www.managemyhome.com

For repair – **in your home** – of **all** major brand appliances, lawn and garden equipment, or heating and cooling systems, **no matter who made it, no matter who sold it!**

For the replacement parts, accessories and owner's manuals that you need to do-it-yourself.

For Sears professional installation of home appliances and items like garage door openers and water heaters.

1-800-4-MY-HOME® Call anytime, day or night
(1-800-469-4663) (U.S.A. and Canada)
www.sears.com **www.sears.ca**

Our Home

For repair of carry-in items like vacuums, lawn equipment, and electronics, call anytime for the location of the nearest **Sears Parts & Repair Service Center**

1-800-488-1222 (U.S.A.) **1-800-469-4663** (Canada)
www.sears.com **www.sears.ca**

To purchase a protection agreement on a product serviced by Sears:

1-800-827-6655 (U.S.A.) **1-800-361-6665** (Canada)

Para pedir servicio de reparación a domicilio, y para ordenar piezas:
1-888-SU-HOGAR®
(1-888-784-6427)

Au Canada pour service en français:
1-800-LE-FOYERMC
(1-800-533-6937)
www.sears.ca

Sears

© Sears Brands, LLC

® Registered Trademark / TM Trademark / SM Service Mark of Sears Brands, LLC
® Marca Registrada / TM Marca de Fábrica / SM Marca de Servicio de Sears Brands, LLC
MC Marque de commerce / MD Marque déposée de Sears Brands, LLC