This Owner's Manual is provided and hosted by Appliance Factory Parts.

Appliance Factory Parts
Experts in BBQ, Humidifier, & Appliance Parts
1-800-955-7075

Kenmore 78546 Owner's Manual

Shop genuine replacement parts for Kenmore 78546

Find Your Kenmore Refrigerator Parts - Select From 665 Models

-------- Manual continues below --------

Kenmore ELITE®

REFRIGERATOR SERVICE MANUAL

CAUTION
BEFORE SERVICING THE UNIT,
READ THE SAFETY PRECAUTIONS IN THIS MANUAL.

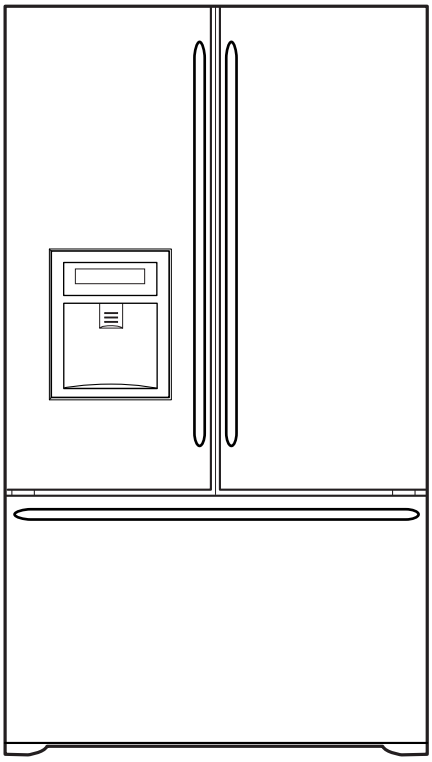

Model #s:

795.78542.805
795.78543.805
795.78544.805
795.78546.805
795.78549.805
795.78552.805
795.78553.805
795.78554.805
795.78556.805
795.78559.805

P/No. MFL47912428

CONTENTS

SAFETY PRECAUTIONS **2**
1. SPECIFICATIONS **3**
2. PARTS IDENTIFICATION **4**
3. DISASSEMBLY **5-12**
DOOR 5-8
TO REMOVE THE DISPENSER 8
FAN AND FAN MOTOR 8
DEFROST CONTROL ASSEMBLY 9
LAMP 9
CONTROL BOX-REFRIGERATOR 9
MULTI DUCT 9
HOW TO REMOVE AND REINSTALL THE PULLOUT DRAWER 10-15
4. ADJUSTMENT **13-15**
COMPRESSOR 13
PTC-STARTER 13
OLP (OVERLOAD PROTECTOR) 14
TO REMOVE THE COVER PTC 14
5. CIRCUIT DIAGRAM **15**
6. TROUBLESHOOTING **17-20**
COMPRESSOR AND ELECTRIC COMPONENTS 17
PTC AND OLP 18
OTHER ELECTRICAL COMPONENTS 18
SERVICE DIAGNOSIS CHART 19
REFRIGERATION CYCLE 20-21
7. OPERATION PRINCIPLE AND REPAIR METHOD OF ICEMAKER **22-27**
8. DESCRIPTION OF FUNCTION AND CIRCUIT OF MICOM **26-47**

SAFETY PRECAUTIONS

Please read the following instructions before servicing your refrigerator.

1. Unplug the power before handling any elctrical componets.
2. Check the rated current, voltage, and capacity.
3. Take caution not to get water near any electrical components.
4. Use exact replacement parts.
5. Remove any objects from the top prior to tilting the product.

1. SPECIFICATIONS

1-1 DISCONNECT POWER CORD BEFORE SERVICING
IMPORTANT – RECONNECT ALL GROUNDING DEVICES

All parts of this appliance capable of conducting electrical current are grounded. If grounding wires, screws, straps, clips, nuts, or washers used to complete a path to ground are removed for service, they must be returned to their original positions, and properly fastened.

1-2 IMPORTANT NOTICE

This information is intended for use by individuals, possessing adequate backgrounds of electrical, electronic, and mechanical experience. Any attempt to repair a major appliance may result in personal injury and property damage. The manufacturer or seller cannot be responsible for the interpretation of this information, nor can it assume any liability in connection with its use.

1-3 ELECTRICAL SPECIFICATIONS

Temperature Control (Freezer Compartment) ...-6°F to +8°F
Defrost Contro ....Total Comp Running Time : 7 hrs ~ 50 hrs
Defrost Thermostat .....46°F
Electrical Rating : 115VAC, 60Hz .....1-5 A
Maximum Current Leakage.....0.5 mA
Maximum Ground Path Resistance .....0.14 Ohms
Energy Consumption .....21 cu.ft. 457 kWh/yr (Energy Star)
.....25 cu.ft. 476 kWh/yr (Energy Star)

1-4 NO LOAD PERFORMANCE CONTROL POSITION: MID/MID

Ambient of .....70°F .....90°F
Fresh Food, °F.....33°F to 41°F .....33°F to 41°F
Frozen Food, °F.....-4°F to +4°F .....-4°F to +4°F
Percent Running Time.....35%-45%.....50°F-70°F

1-5 REFRIGERATION SYSTEM

Minimum Compressor Capacity Vacuum.....20 MIN.
Minimum Equalized Pressure
@ 70°F .....52 PSIG
@ 90°F .....59 PSIG
Refrigerant R134a.....4.41oz.
Compressor.....754BTU/hr

1-6 INSTALLATION

Clearance must be provided at top, sides, and rear of the refrigerator for air circulation.
AT REAR .....1 in

1-7 REPLACEMENT PARTS

25cu,ft	
795. 78542.805	795. 78552.805
795. 78543.805	795. 78553.805
795. 78544.805	795. 78554.805
795. 78546.805	795. 78556.805
795. 78549.805	795. 78559.805

Cover Relay.....3550C-0042C
Overload 6750C-0004S
Defrost Thermostat 6615JB2005H
Defrost Heater 5300JK1005D
Evaporator Fan Motor 4681JK1004D
Capacitor (Running) 0CZZJB2014L
Compressor (Hi-Side) TCA34638901
Evaporator (Lo-Side) 5421JJ1003B
Condenser ACG36653801
Dryer 5851JA2008U
Condenser Fan Motor 4681JB1029D
Temperature Control 6871JB1439B
Main Control 6871JB1423H

1-8 AIR FLOW / CIRCULATION D'AIR

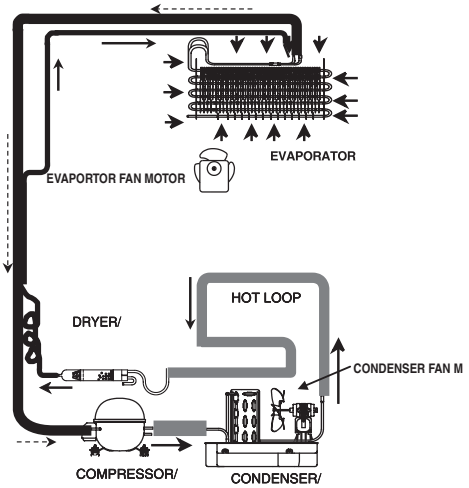

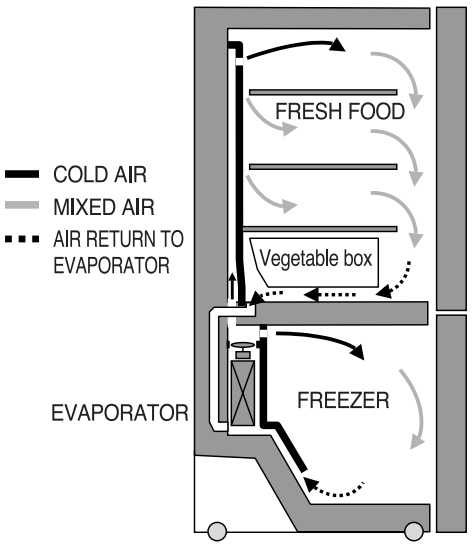

1-9 DIMENSIONS

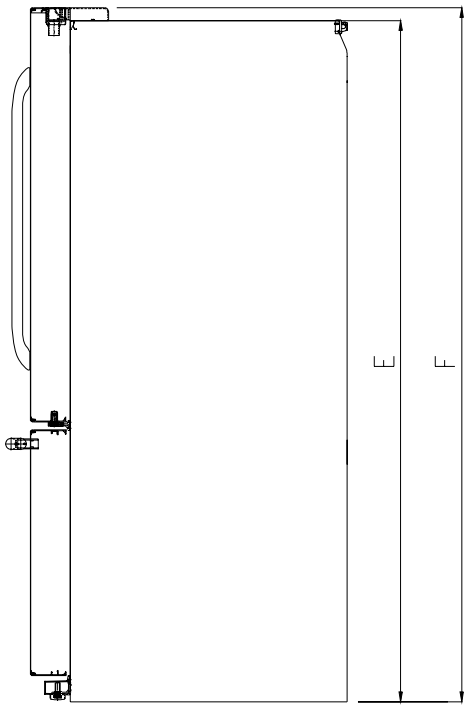

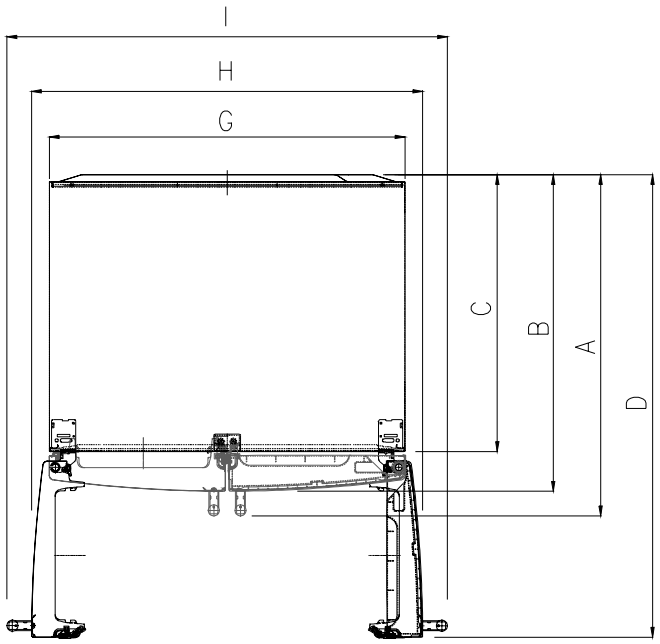

Description		795.785**
Depth w/ Handles	A	34 1/4 in.
Depth w/o Handles	B	31 3/4 in.
Depth w/o Door	C	27 7/8 in.
Depth (Total with Door Open)	D	46 1/2 in.
Height to Top of Case	E	68 3/8 in.
Height to Top of Door Hinge	F	69 3/4 in.
Width	G	35 3/4 in.
Width (door open 90 deg. w/o handle)	H	39/1/4 in.
Width (door open 90 deg. w/ handle)	I	44 1/4 in.

2. PARTS IDENTIFICATION

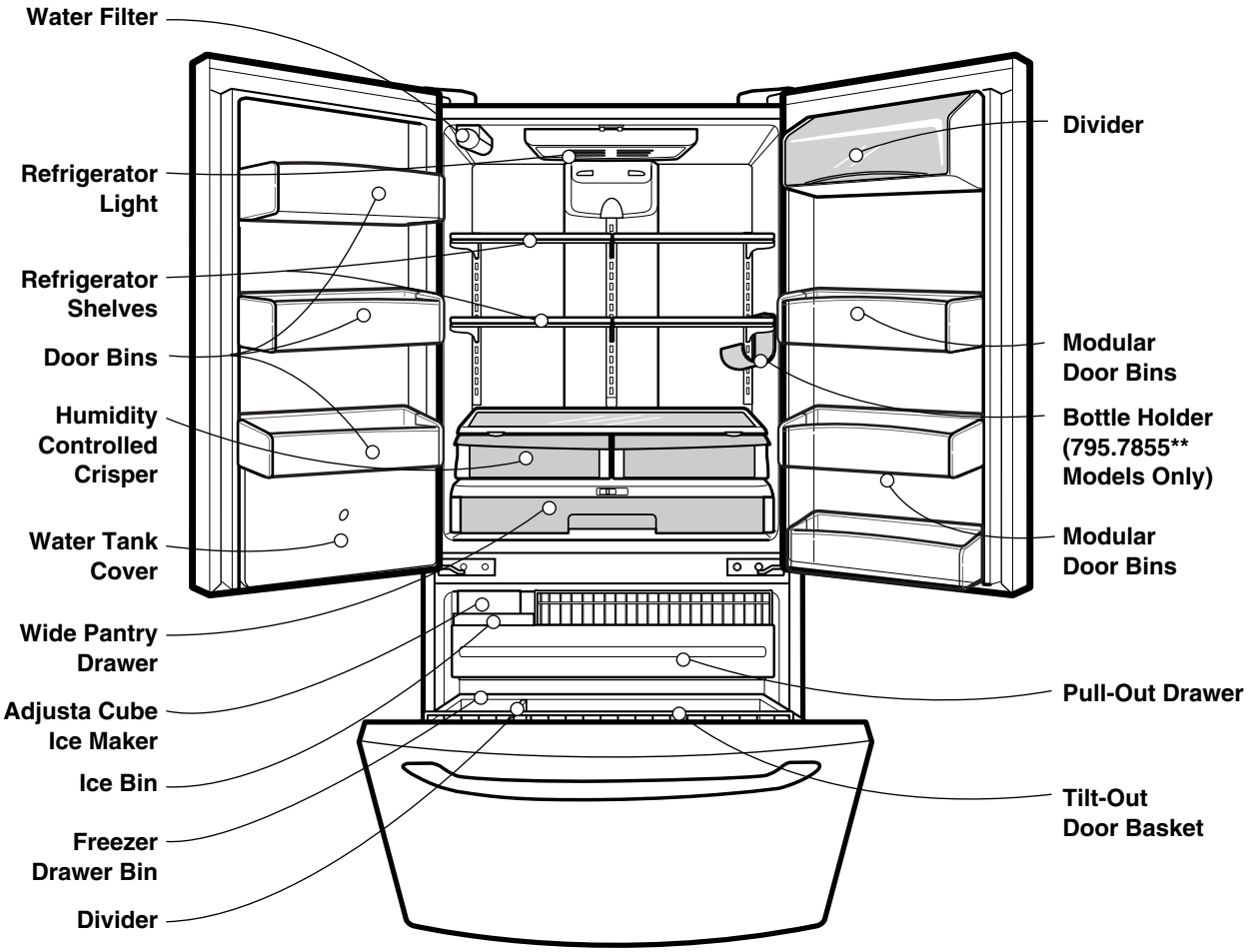

3. DISASSEMBLY

3-1 REMOVING AND REPLACING REFRIGERATOR DOORS

To remove the left refrigerator door:
Pull the water tube out of the fitting while pressing the release ring on the fitting.
When you pull out the tube, first you have to push the collet by opposite direction of arrow in the upper picture and tube pull out by direction of arrow.

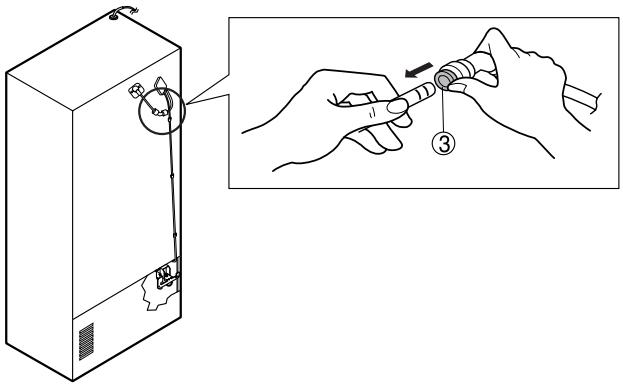

⚠ **CAUTION:** Before you begin, remove food and bins from the doors.

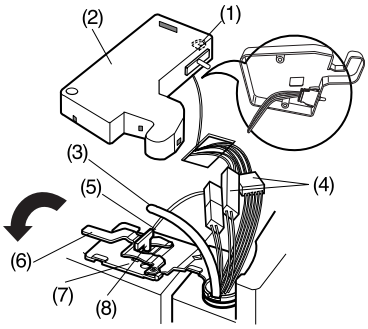

- Open the door. Remove the top hinge cover screw (1).
- Use a flat-head screwdriver to pry back the hooks (not shown) on the front underside of the cover (2). Lift up the cover.
- Remove the cover. Pull out the tube (3).
- Disconnect all the wire harnesses (4).
- Remove the grounding screw(5)
- Rotate hinge lever (6) counterclockwise. Lift the top hinge (7) free of the hinge lever latch (8).

IMPORTANT: When lifting the hinge free of the latch, be careful that the door does not fall forward.

- Lift the door from the middle hinge pin and remove the door.
- Place the door, inside facing up, on a nonscratching surface.

To remove the right refrigerator door:

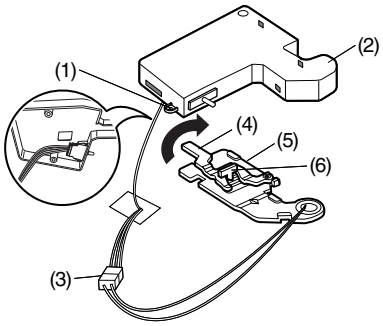

- Open the door. Remove the top hinge cover screw (1). Lift up the cover (2).
- Remove the cover.
- Disconnect the wire harness (3).
- Rotate the hinge lever (4) clockwise. Lift the top hinge (5) free of the hinge lever latch (6).

IMPORTANT: When lifting the hinge free of the latch, be careful that the door does not fall forward.

⚠ WARNING

Explosion Hazard

- Disconnect electrical supply to the refrigerator before installing. Failure to do so could result in death or serious injury.
- Do not put hands or feet or other objects into the air vents, base grille, or bottom of the refrigerator. You may be injured or receive an electrical shock.
- Be careful when you work with the hinge, base grille, and stopper. You may be injured.

3-2 DOOR

● **Door Gasket Removal**

1. Remove door frame cover

Starting at top of cover and working down, snap cover out and away from door.

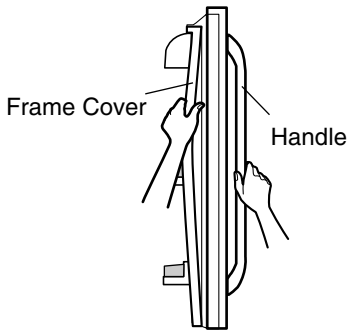

Figure 1

2. Remove gasket bracket clips

There are two clips on each door. Start bracket removal near one of the middle clips.

1) Pull gasket back to expose gasket bracket clip and door frame.
2) Insert a flat tip screwdriver into seam between gasket bracket and door frame and pry back until clips snaps out.
3) Continue prying back along seam until all clips snap out.

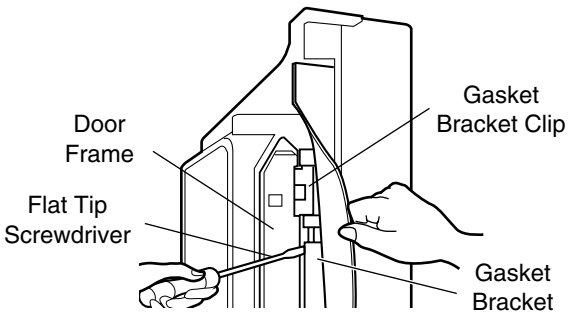

Figure 2

3. Remove gasket

Pull gasket free from gasket channel on the three remaining sides of door.

Figure 3

● **Door Gasket Replacement**

1. Insert gasket bracket clips

1) Insert gasket bracket edge beneath door frame edge.
2) Turn upper gasket bracket spring so that the spring ends are in the door channel.
3) Push in clip until you hear it snap securely into place.

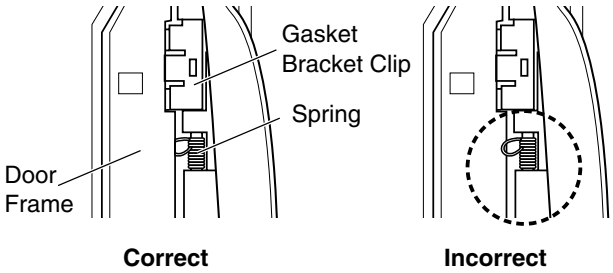

Figure 4

4) Push in remaining two clips until you hear each snap securely into place.

Note: Make sure that no part of gasket bracket edge protrudes from beneath door frame edge.

2. Insert gasket into channel

1) Snap gasket assembly into the door bracket.

Inserting the Gasket Assembly into the Bracket Door

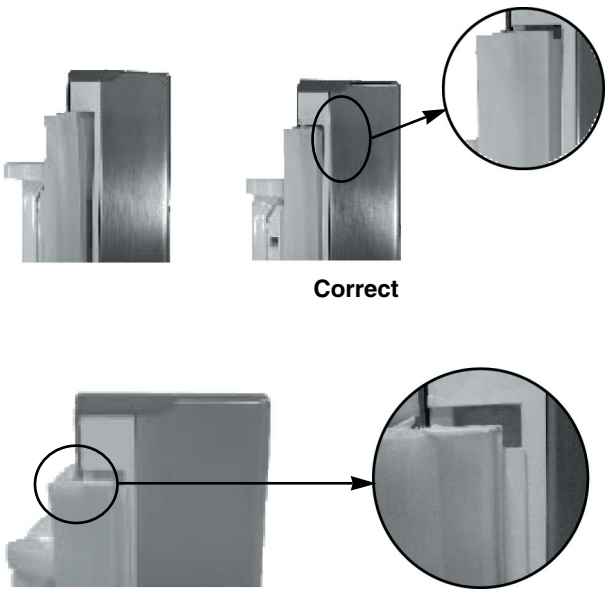

Figure 5

2) Press gasket into channels on the three remaining sides of door.

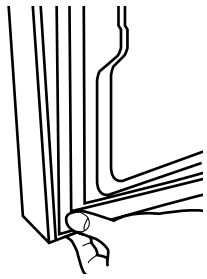

Figure 6

3. Replace door frame cover

Starting at top of cover and working down, snap cover back into door.

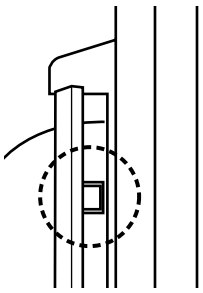

Figure 7

3-3 TO REMOVE THE DISPENSER

1. Use fiat tip screwdriver to pry back hooks on botton underside of cover dispenser.

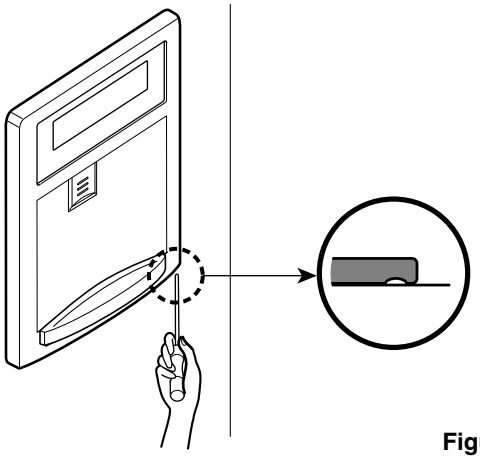

Figure 8

2. Pry off cover dispenser.

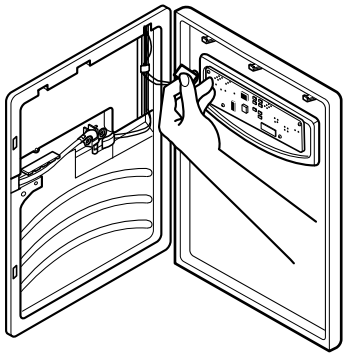

Figure 9

Disconnect wire harness.

3. Replace cover dispenser in opposite manner and order of removal.

3-4 DOOR ALIGNMENT

If the space between your doors is uneven, follow the instructions below to align the doors:

1. With one hand, lift up the door you want to raise at middle hinge.
2. With other hand, use pliers to insert snap ring as shown.
3. Insert additional snap rings until the doors are aligned. (Three snap rings are provided with unit.)

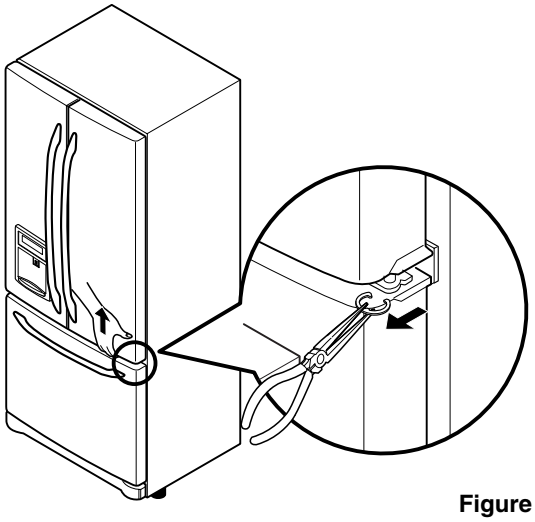

Figure 10

3-5 FAN AND FAN MOTOR

1. Remove the freezer shelf. (If your refrigerator has an icemaker, remove the icemaker first)
2. Remove the plastic guide for slides on left side by unscrewing phillips head screws.
3. Remove the grille by pulling it out and by loosening a screw.
4. Remove the Fan Motor assembly by loosening 2 screws and disassemble the shroud.
5. Pull out the fan and separate the Fan Motor and Bracket.

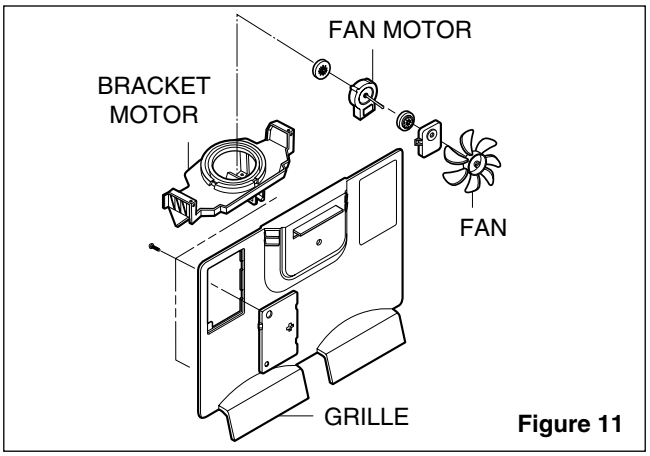

Figure 11

3-6 DEFROST CONTROL ASSEMBLY

Defrost Control assembly consists of Defrost Sensor and FUSE–M.
The Defrost Sensor works to defrost automatically. It is attached to the metal side of the Evaporator and senses its temperature. At 46°F(8°C), it turns the Defrost Heater off. Fuse-M is a safety device for preventing over-heating of the Heater when defrosting. At 172.8°F(77°C), it turns the Defrost Heater off. It is attached to the between Eva pipe in the middle Evaporator.

1. Pull out the grille assembly. (Figure 12)
2. Separate the connector with the Defrost Control assembly and replace the Defrost Control assembly after cutting the Tie Wrap. (Figure 13)

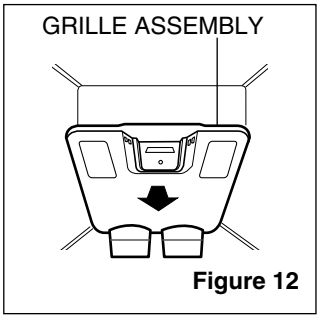

Figure 12

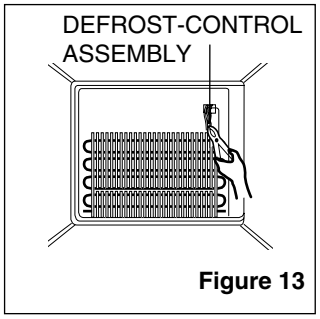

Figure 13

3-7 LAMP

3-7-1 Refrigerator Compartment Lamp

1. Unplug Refrigerator, or disconnect power at the circuit breaker.
2. If necessary, remove top shelf or shelves.
3. Using a flat instrument, gently pry the cover loose in the front as shown. Rotate downward to remove rear tabs.
4. Make sure the bulbs are cool to the touch. Turn bulbs counterclockwise to remove.
5. Assemble in reverse order by snapping the Lamp Cover in, engaging the rear tabs followed by the front tabs. (Max. 60 W-2EA)

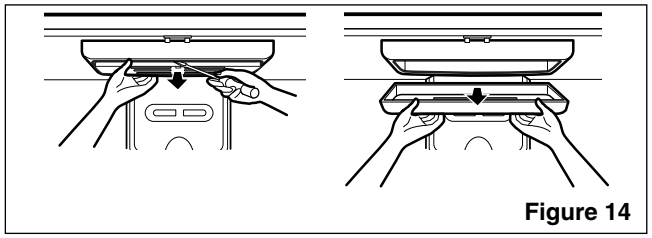
Figure 14

3-7-2 Freezer Compartment Lamp

1. Unplug refrigerator power cord form outlet.
2. Using a flat instrument, gently pry the lamp cover loose in the front as shown. Rotate downward to remove the rear tabs.
3. Make sure the bulb is cool to the touch. Turn the bulb counterclockwise to remove.
4. Replace with a new 60-watt appliance bulb.
5. Insert tabs on back of cover into slots in freezer ceiling. Push cover up to snap front into place.

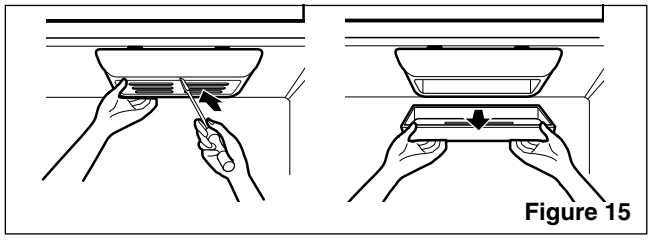
Figure 15

3-8 CONTROL BOX-REFRIGERATOR

1. First, remove all shelves in the refrigerator, than remove the Refrigerator control Box by loosening 2 screws.

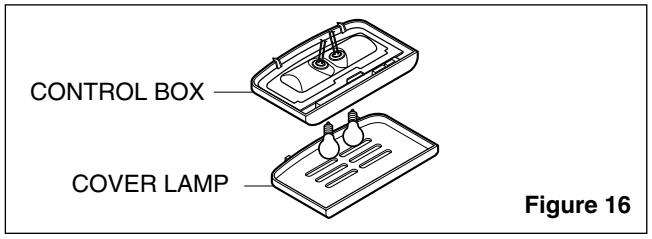

Figure 16

2. Remove the Refrigerator Control Box by pulling it downward.
3. Disconnect the lead wire on the right position and separate the lamp sockets.

3-9 MULTI DUCT

1. Remove an upper and lower Cap by using a flat screwdriver, and loosen 2 screws. (Figure 17)
2. Disconnect the lead wire on the bottom position.

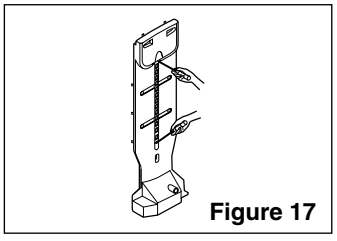
Figure 17

3-10 HOW TO REMOVE AND REINSTALL THE PULLOUT DRAWER

3-10-1 FOLLOW STEPS TO REMOVE

Step 1) Open the freezer door.

Step 2) Remove the lower basket.

Step 3) Remove the two screws from the guide rails (one from each side).

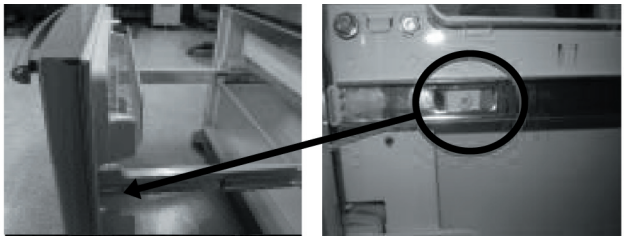

Step 4) Lift the freezer door up to unhook it from the rail support and remove.
Pull both rails to full extension.

Step 5) First: Remove the gear from the left side first by releasing the tab behind the gear, place a screwdriver between the gear and the tab and pull up on the gear.

Second: Remove the center rail.

Third: Remove the gear from the right side by following the same steps for the left side.

NOTE: THIS TAB MUST BE PUSHED IN TO RELEASE THE GEAR.

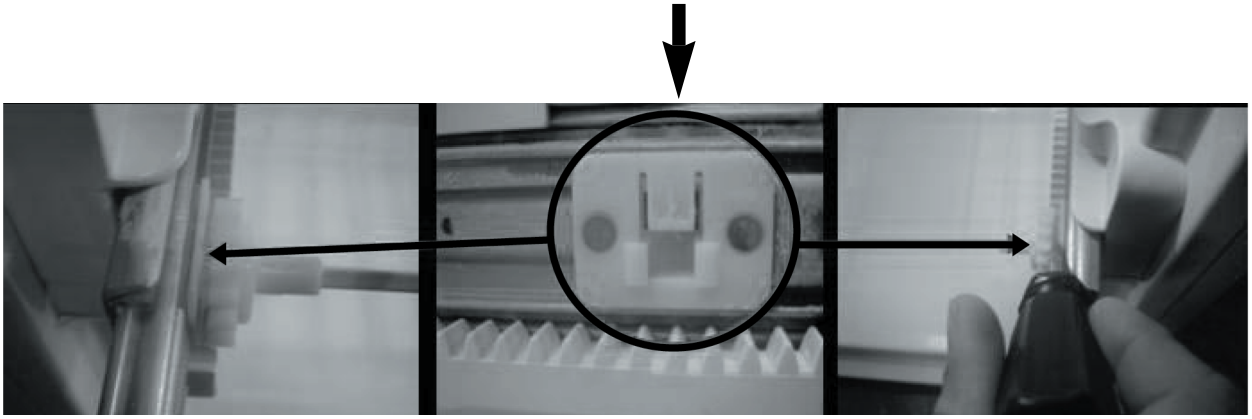

3-10-2 FOLLOW STEPS TO REINSTALL

Step 1) Reinstall the right side gear into the clip.

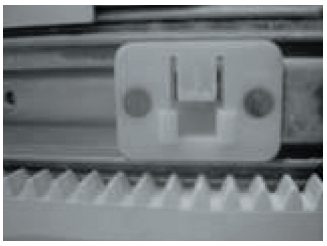

Step 2) Insert the rail into the right side gear. Gears do **not** need to be perpendicular to each other.

Step 3) Insert the rail into the left side gear, and insert the gear into the clip.

Step 4) The rail system will align itself by pushing the rails all the way into the freezer section.
Pull the rails back out to full extension.

Step 5) Reinstall the freezer door by inserting the rail tabs into the guide rail.

Step 6) Reinstall the two screws into the guide rails (one from each side).

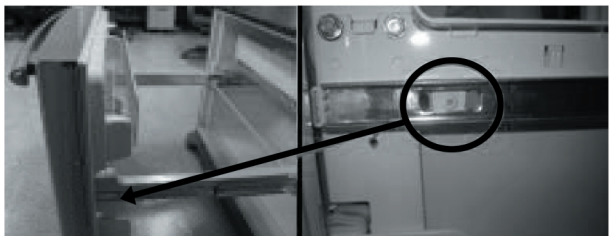

Step 7) Reinstall the lower basket, and close the freezer door.

3-10-3 PULL OUT DRAWER

To separate the drawer, push the front left and right hooks in ① direction to pull up and remove.
Then gently lift the gear part of rear left and right side of the drawer and pull it out in ③ direction.

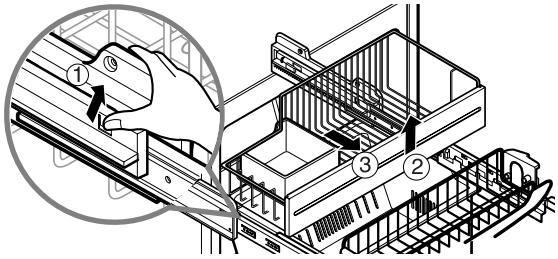

To install, reposition the gear part of rear left and right side of the drawer after pulling out both rails as much as possible, and gently push down both left and right side while checking the hook on the front part.

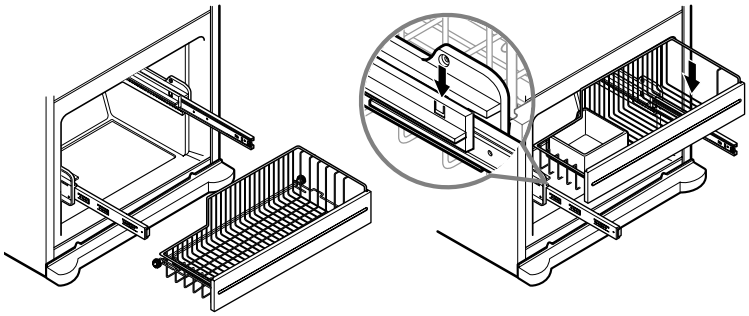

4. ADJUSTMENT

4-1 COMPRESSOR

4-1-1 Role

The compressor intakes low temperature and low pressure gas from the evaporator of the refrigerator and compresses this gas to high-temperature and high-pressure gas. It then delivers the gas to the condenser.

4-1-2 Composition

The compressor includes overload protection. The PTC starter and OLP (overload protector) are attached to the outside of the compressor. Since the compressor is manufactured to tolerances of 1 micron and is hermetically sealed in a dust and moisture-free environment, use extreme caution when repairing it.

4-1-3 Note for usage

(1) Be careful not to allow over-voltage and over-current.
(2) If compressor is dropped or handled carelessly, poor operation and noise may result.
(3) Use proper electric components appropriate to the particular compressor in your product.
(4) Keep compressor dry.
If the compressor gets wet (in the rain or a damp environment) and rust forms in the pin of the Hermetic Terminal, poor operation and contact may result.
If the hermetic connector rusts out or fails, refrigerant and oil will be expelled into the contact area, probably resulting in smoke and fire.
(5) When replacing the compressor, be careful that dust, humidity, and soldering flux don't contaminate the inside of the compressor. Contamination in the cylinder may cause noise, improper operation or even cause it to lock up.

4-2 TSD STARTER

- The TSD must not be applied to refrigeration systems with defrosting electrical resistance or any other component in parallel to the thermostat. Systems with this configuration can maintain a residual voltage over the compressor when the thermostat is opened, obstructing the proper functioning of the TSD. It is vital for the TSD circuit and compressor to remain completely de-energized after opening the thermostat.
- Use of the fixing clamp is essential, as this prevents disconnection or bad TSD contact in relation to the compressor as well as to running capacitor in relation to the TSD. The ones that assemble it have to guarantee a perfect connection between the parts. Bad contacts and sparking can burn out the electronic circuit.
- The electronic circuit was designed taking the mandatory use of the running capacitor into consideration.
The 115V version is rect angular box, assembling directly onto the TSD body .
- The plastic box was projected to offer protection against contamination and mechanical shock normally present in refrigeration system production lines.
- The TSD's internal components may undergo degradation when in contact with chemical elements such as Cl_2, H_2S, NH_3, SO_X, NO_X. Some plastic isolation of cables may release chemical elements when submitted to high temperature conditions. Thus, check if the isolation of the cables used on the terminal board are in accordance with this recommendation.

4-2-3 TSD-Applied circuit diagram

● **Starting Method for the Motor**

ELECTRICAL AND DIMENSION DIAGRAM
ELECTRICAL CONNECTION DIAGRAM

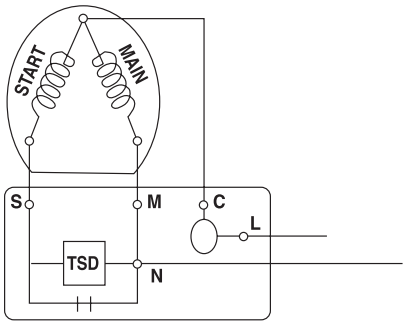

4-2-4 Reference

- The TSD was designed for the operation with a run capacitor and Embraco domestic compressor; any other application must be previously evaluated by Embraco's technical team.
- Embraco reserves the right to check the customer's handling of the manufacturing / assembly process, indicating possible adjustments should any be required.
- After replacement, the compressor and it's accessories must have proper processing, and the components must be recycled according to the material group (ferrous, non-ferrous, polymers, oils, ...) directives.
These recomendations are intended to minimize the adverse impacts that may be caused to the environment.

4-3 OLP (OVERLOAD PROTECTOR)

4-3-1 Definition of OLP

(1) OLP (OVERLOAD PROTECTOR) is attached to the Compressor and protects the Motor by opening the circuit to the Motor if the temperature rises and activating the bimetal spring in the OLP.

(2) When high current flows to the Compressor motor, the Bimetal works by heating the heater inside the OLP, and the OLP protects the Motor by cutting off the current flowing to the Compressor Motor.

4-3-2 Role of the OLP

(1) The OLP is attached to the Sealed Compressor used for the Refrigerator. It prevents the Motor Coil from being started in the Compressor.

(2) For normal operation of the OLP, do not turn the Adjust Screw of the OLP in any way.

(OVERLOAD PROTECTOR cross section)

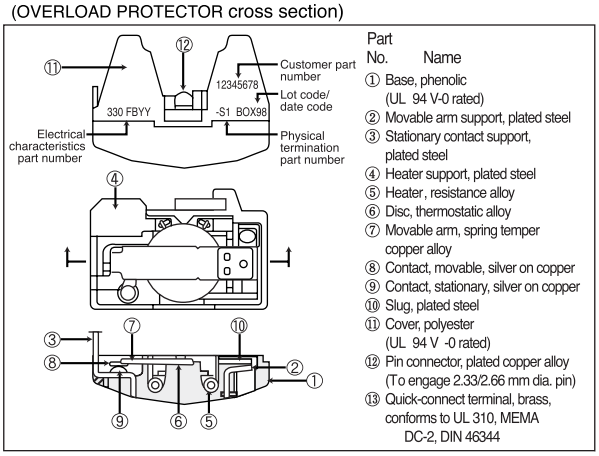

Part No. Name

① Base, phenolic (UL 94 V-0 rated)
② Movable arm support, plated steel
③ Stationary contact support, plated steel
④ Heater support, plated steel
⑤ Heater, resistance alloy
⑥ Disc, thermostatic alloy
⑦ Movable arm, spring temper copper alloy
⑧ Contact, movable, silver on copper
⑨ Contact, stationary, silver on copper
⑩ Slug, plated steel
⑪ Cover, polyester (UL 94 V -0 rated)
⑫ Pin connector, plated copper alloy (To engage 2.33/2.66 mm dia. pin)
⑬ Quick-connect terminal, brass, conforms to UL 310, MEMA DC-2, DIN 46344

Figure 19

5. CIRCUIT DIAGRAM

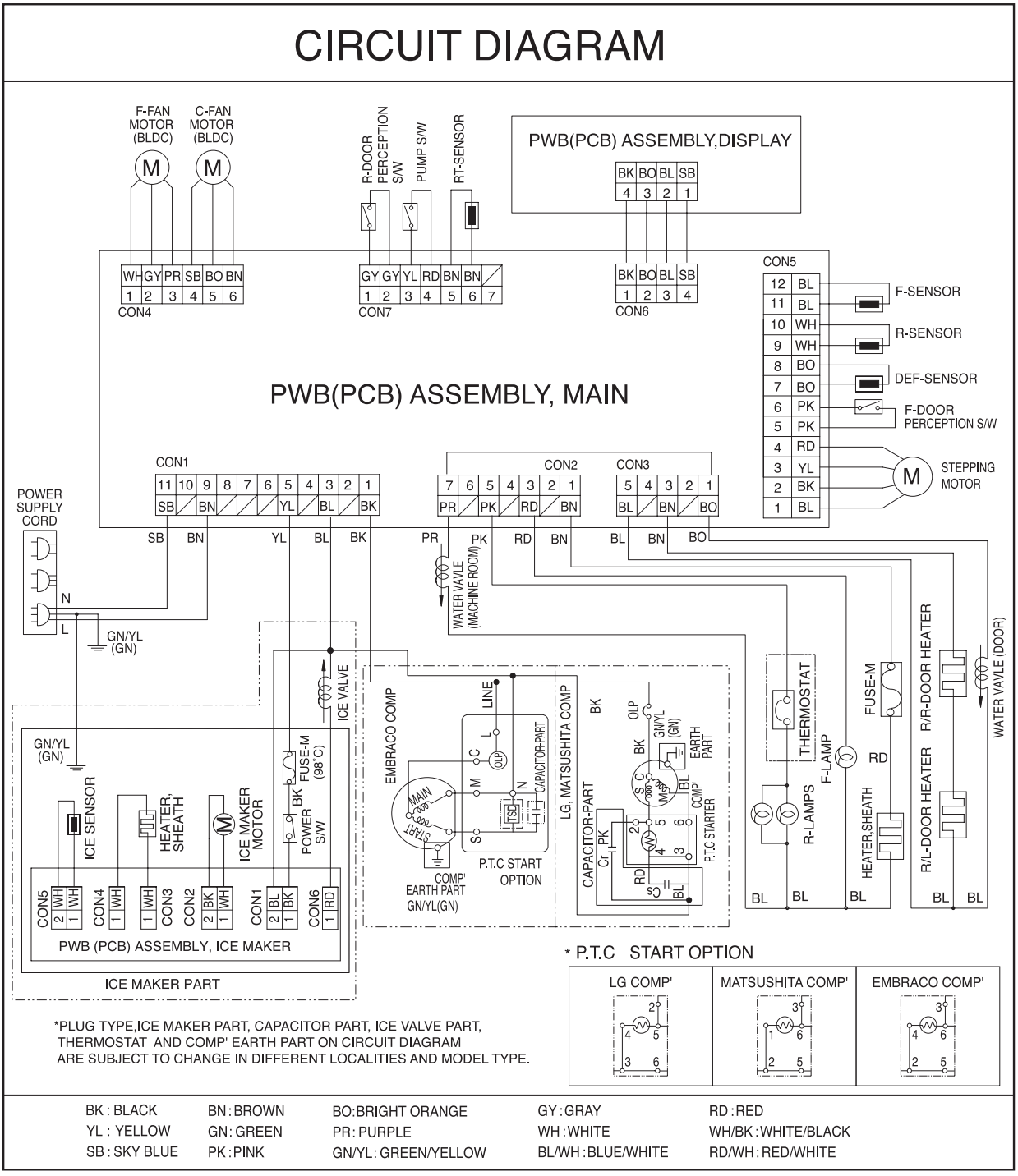

6-1 COMPRESSOR AND ELECTRIC COMPONENTS

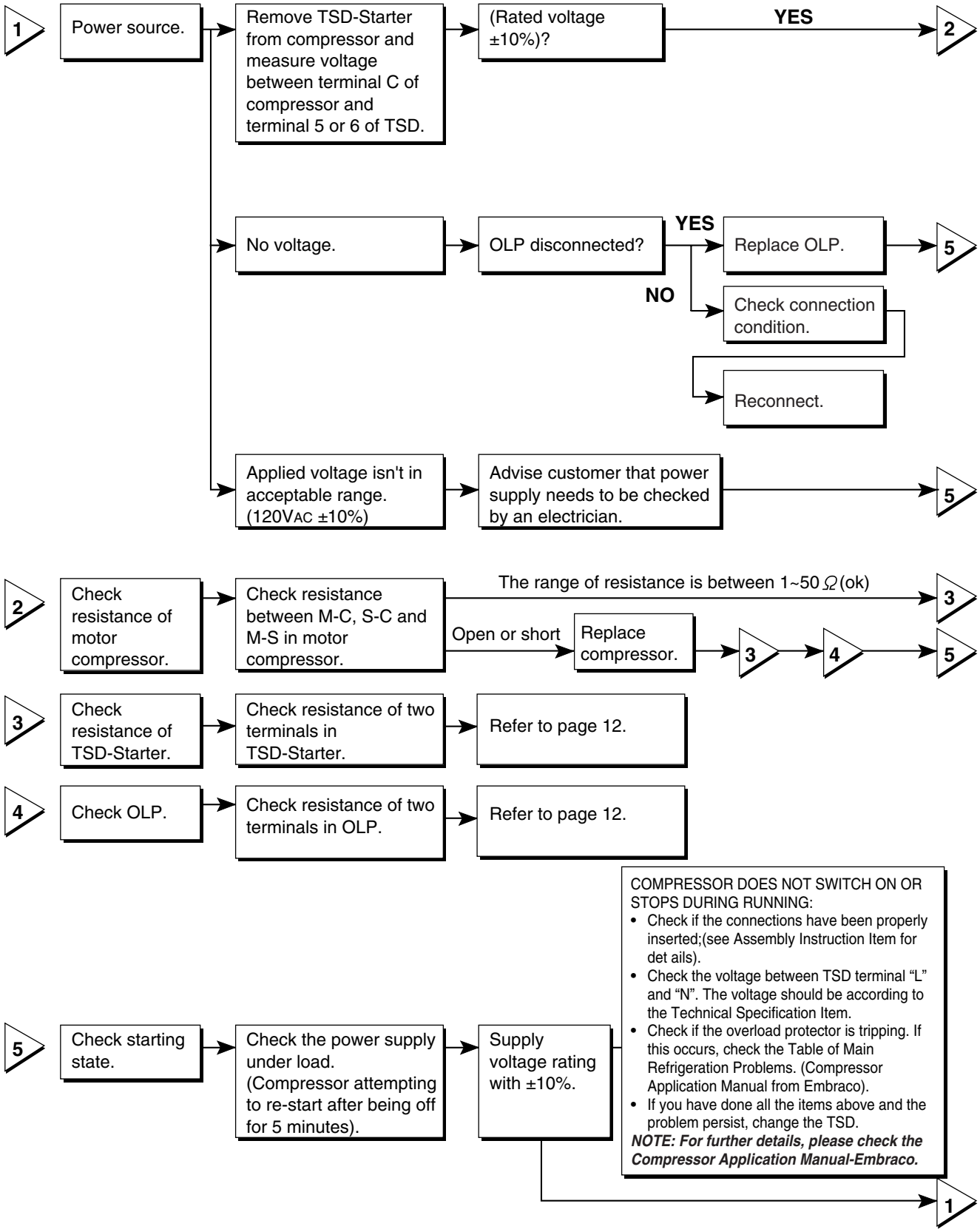

6-2 TSD AND OLP

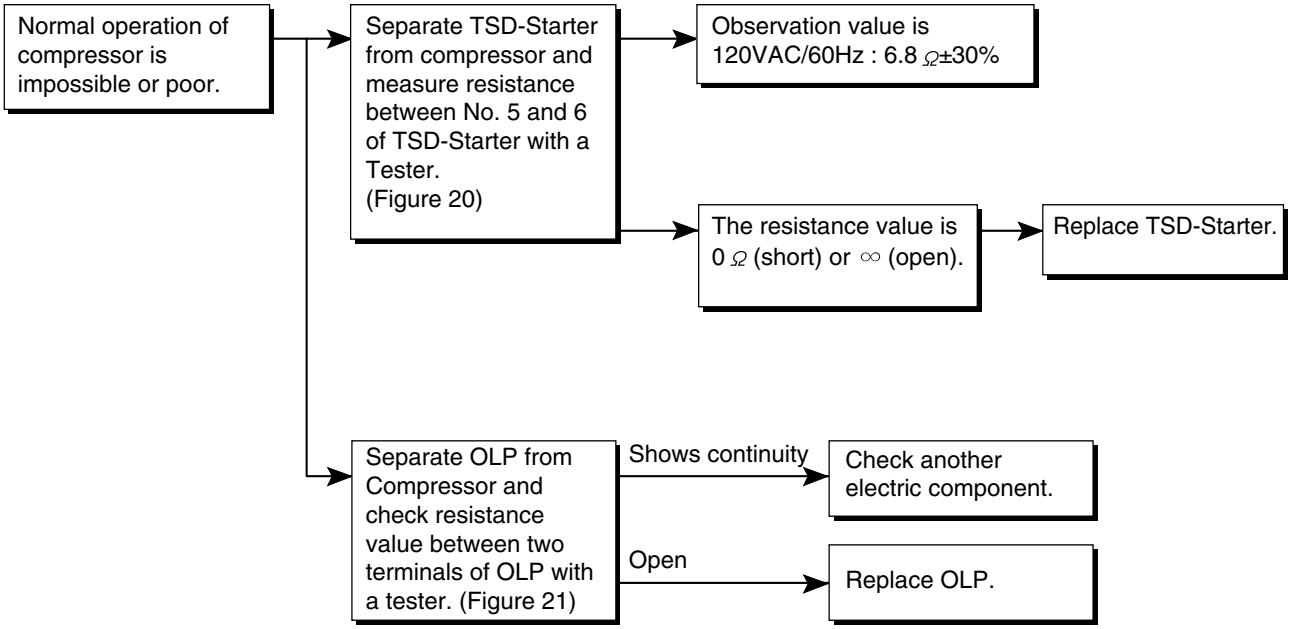

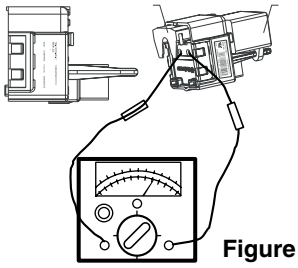

Figure 20

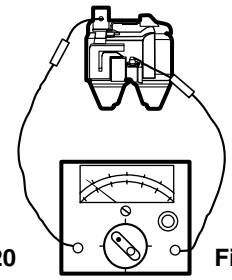

Figure 21

6-3 OTHER ELECTRICAL COMPONENTS

▼ Not cooling at all

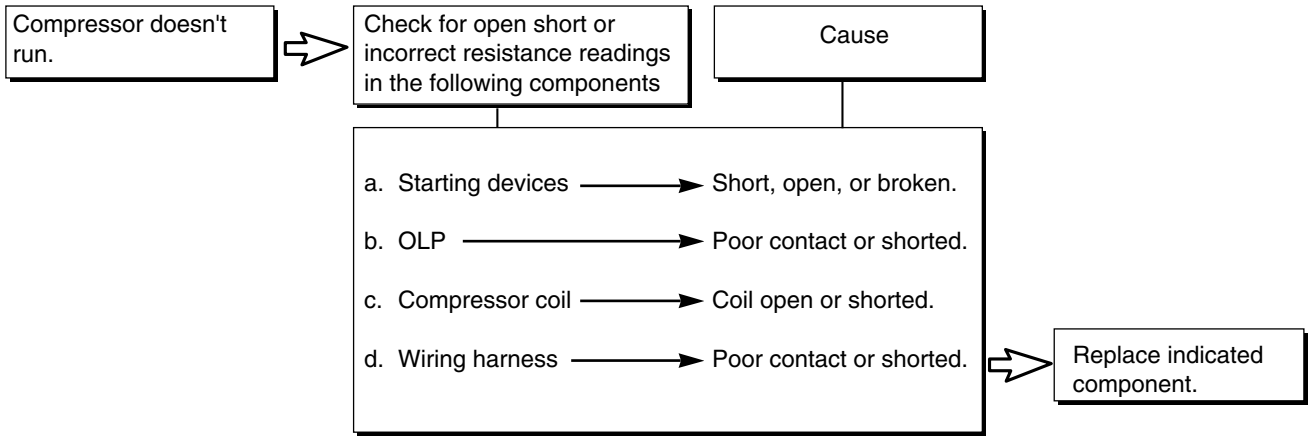

▼ Poor cooling performance

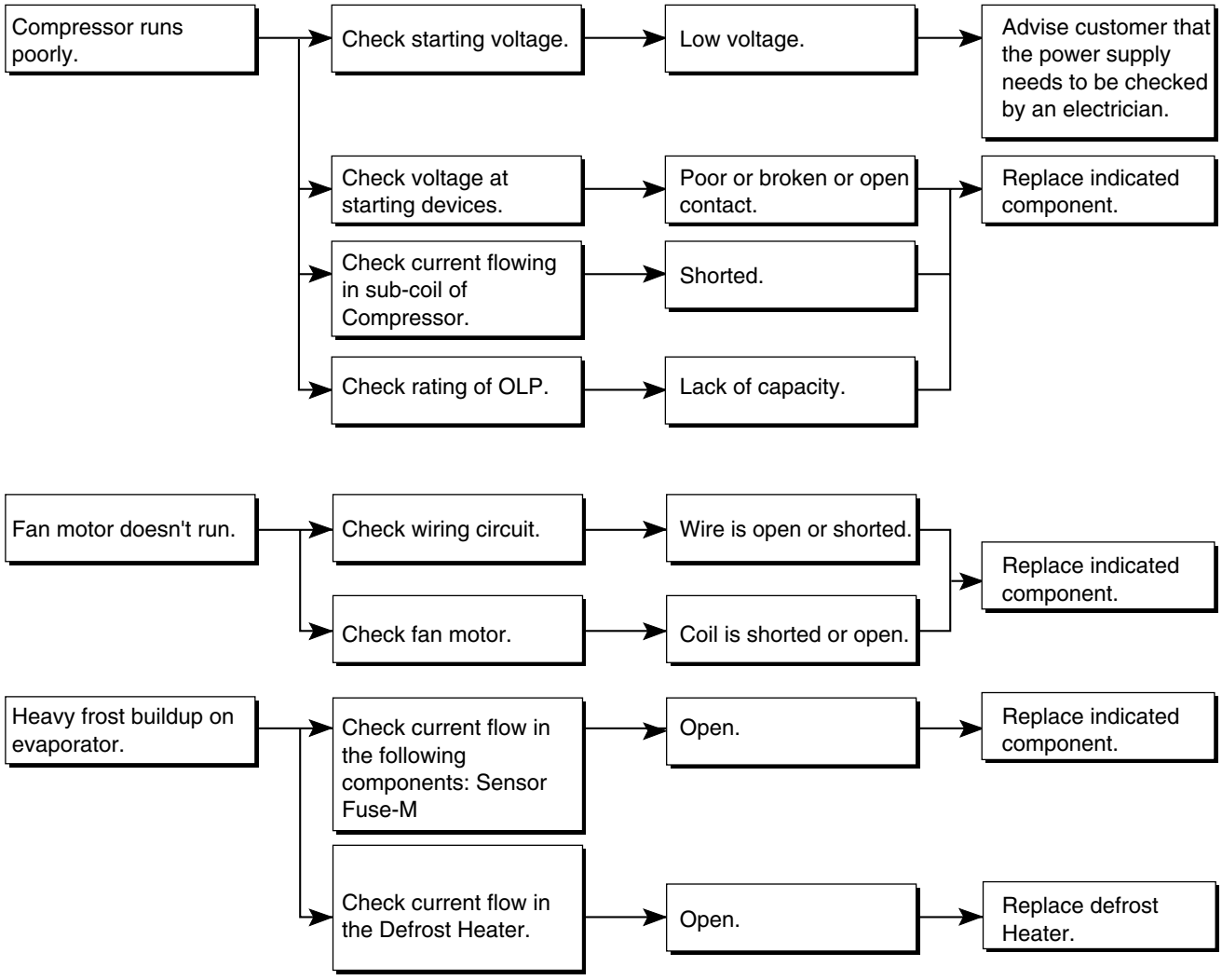

6-4 SERVICE DIAGNOSIS CHART

COMPLAINT	POINTS TO BE CHECKED	REMEDY
No Cooling.	• Is the power cord unplugged from the outlet? • Check if the power switch is set to OFF. • Check if the fuse of the power switch is shorted. • Measure the voltage of the power outlet.	• Plug into the outlet. • Set the switch to ON. • Replace the fuse. • If the voltage is low, correct the wiring.
Cools poorly.	• Check if the unit is placed too close to the wall. • Check if the unit is placed too close to the stove, gas cooker, or in direct sunlight. • Is the ambient temperature too high or the room door closed? • Check if food put in the refrigerator is hot. • Did you open the door of the unit too often or check if the door is sealed properly? • Check if the Control is set to **Warm position**.	• Place the unit about 4 inches (10 cm) from the wall. • Place the unit away from these heat sources. • Lower the ambient temperature. • Put in foods after they have cooled down. • Don't open the door too often and close it firmly. • Set the control to **Recommended position**.
Foods in the Refrigerator are frozen.	• Is food placed in the cooling air outlet? • Check if the control is set to **colder position**. • Is the ambient temperature below 41°F(5°C)?	• Place foods in the high-temperature section. (front part) • Set the control to **Recommended position**. • Set the control to **Warm position**.
Condensation or ice forms inside the unit.	• Is liquid food sealed? • Check if food put in the refrigerator is hot. • Did you open the door of the unit too often or check if the door is sealed properly?	• Seal liquid foods with wrap. • Put in foods after they have cooled down. • Don't open the door too often and close it firmly.
Condensartion forms in the Exterior Case.	• Check if the ambient temperature and humidity of the surrounding air are high. • Is there a gap in the door gasket?	• Wipe moisture with a dry cloth. It will disappear in low temperature and humidity. • Fill up the gap.
There is abnormal noise.	• Is the unit positioned in a firm and even place? • Are any unnecessary objects placed in the back side of the unit? • Check if the drip tray is not firmly fixed. • Check if the cover of the compressor enclosure in the lower front side is taken out.	• Adjust the leveling screw, and position the refrigerator in a firm place. • Remove drip tray. • Fix the Drip Tray firmly in the original position. • Place the cover in its original position.
Door does not close well.	• Check if the door gasket is dirty with an item like juice. • Is the refrigerator level? • Is there too much food in the refrigerator?	• Clean the door gasket. • Position in the firm place and level the leveling screw. • Make sure food stored in shelves does not prevent the door from closing.
Ice and foods smell unpleasant.	• Check if the inside of the unit is dirty. • Are foods with a strong odor unwrapped? • The unit smells of plastic.	• Clean the inside of the unit. • Wrap foods that have a strong odor. • New products smell of plastic, but this will go away after 1-2 weeks.

●Other possible problems:

Check if frost forms in the freezer.	→ Not defrosting	→ Check components of the defrosting circuit.
Check the refrigeration system.	→ The system is faulty.	→ Perform sealed system repair.
Check the thermistor.	→ The operation of the Thermistor is incorrect.	→ Replace the thermistor.

6-5 REFRIGERATION CYCLE

▼ Troubleshooting Chart

CAUSE		STATE OF THE UNIT	STATE OF THE EVAPORATOR	TEMPERATURE OF THE COMPRESSOR	REMARKS
LEAKAGE	PARTIAL LEAKAGE	Freezer compartment and refrigerator don't cool normally.	Low flowing sound of refrigerant is heard and frost forms in inlet only.	A little higher than ambient temperature.	• Refrigerant level is low due to a leak. • Normal cooling is possible by restoring the normal amount of refrigerant and repairing the leak.
	COMPLETE LEAKAGE	Freezer compartment and Refrigerator don't cool normally.	Flowing sound of refrigerant is not heard and frost isn't formed.	Equal to ambient temperature.	• No discharging of refrigerant. • Normal cooling is possible by restoring the normal amount of refrigerant and repairing the leak.
CLOGGED BY DUST	PARTIAL CLOG	Freezer compartment and refrigerator don't cool normally.	Flowing sound of refrigerant is heard and frost forms in inlet only.	A little higher than ambient temperature.	• Normal discharging of the refrigerant. • The capillary tube is faulty.
	WHOLE CLOG	Freezer compartment and Refrigerator don't cool.	Flowing sound of refrigerant is not heard and frost isn't formed.	Equal to ambient temperature.	• Normal discharging of the refrigerant.
MOISTURE CLOG		Cooling operation stops periodically.	Flowing sound of refrigerant is not heard and frost melts.	Lower than ambient temperature.	• Cooling operation restarts when heating the inlet of the capillary tube.
DEFECTIVE COMPRESSION	COMP-RESSION	Freezer and refrigerator don't cool.	Low flowing sound of refrigerant is heard and frost forms in inlet only.	A little higher ambient temperature.	• Low pressure at high side of compressor due to low refrigerant level.
	NO COMP-RESSION	No compressing operation.	Flowing sound of refrigerant is not heard and there is no frost.	Equal to ambient temperature.	• No pressure in the high pressure part of the compressor.

6-5-1 SEALED SYSTEM DIAGNOSIS

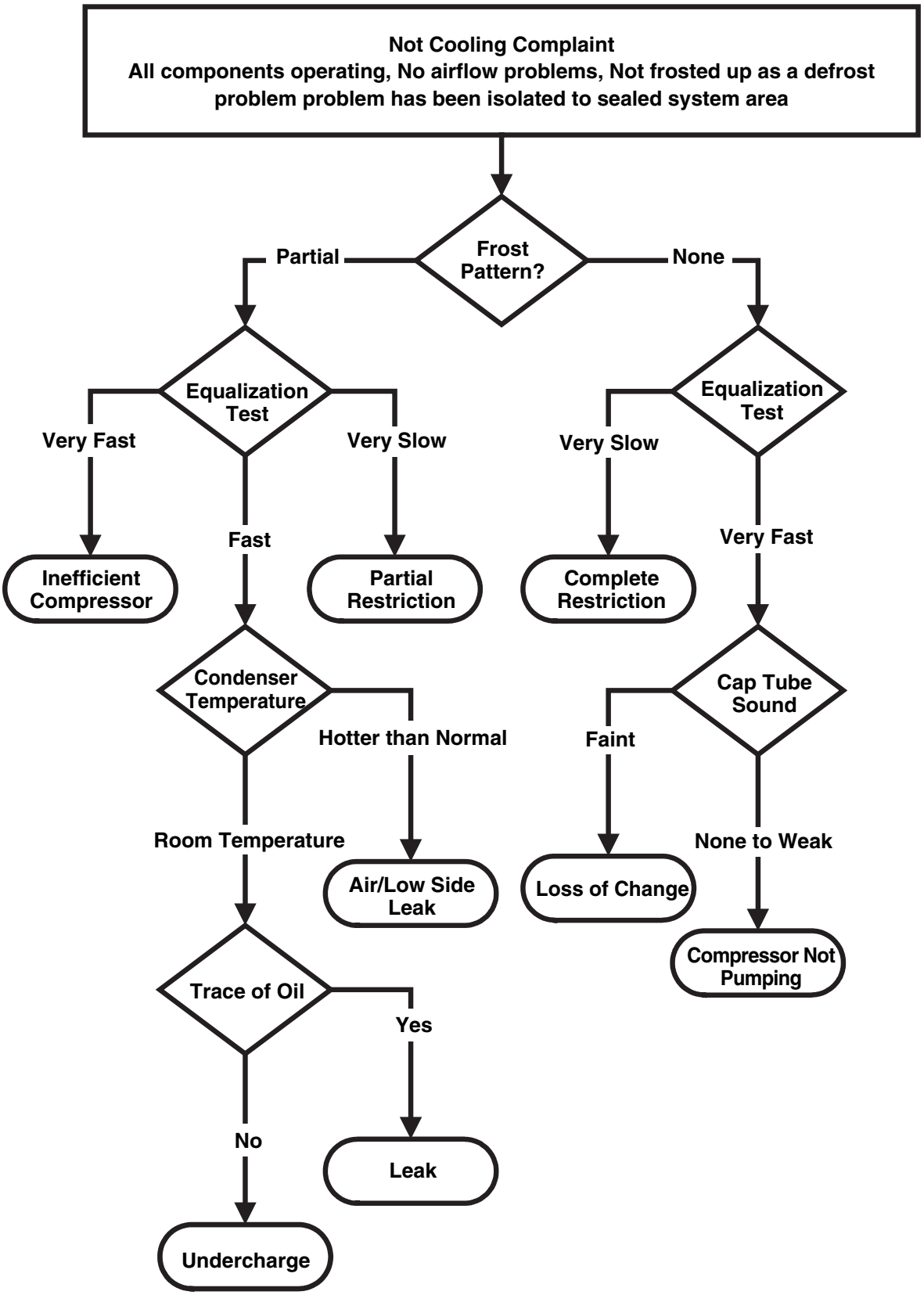

(The equalization test is trying to restart a compressor using a start kit after it has been operating.)

7. OPERATION PRINCIPLE AND REPAIR METHOD OF ICEMAKER

7-1 OPERATION PRINCIPLE

7-1-1 Operation Principle of Icemaker

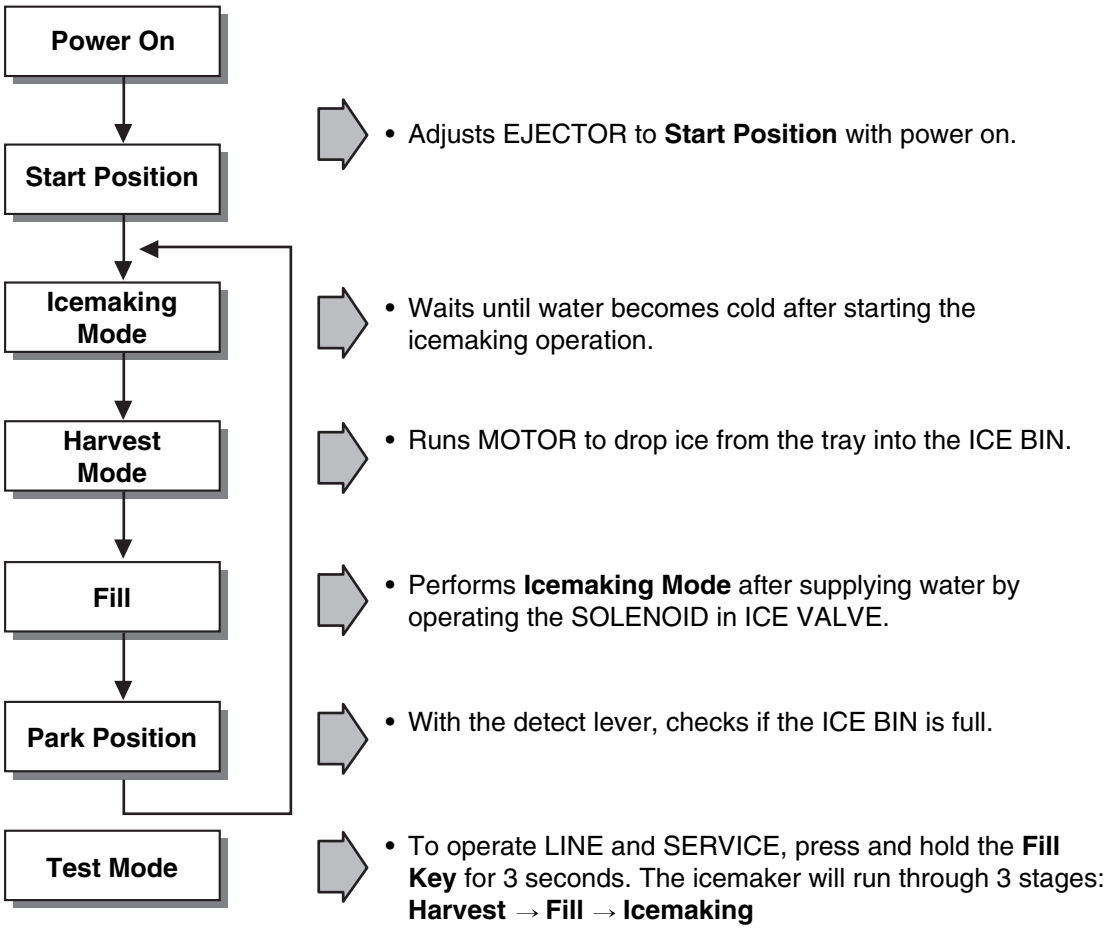

1. Turning the icemaker stop switch off (O) stops the icemaking function.
2. Setting the icemaker switch to OFF and then turning it back on will reset the icemaker control.

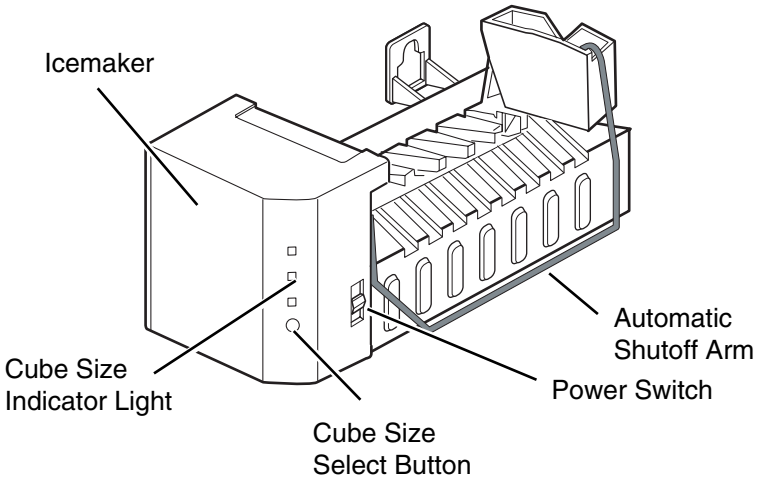

7-2 ICE MAKER FUNCTIONS

7-2-1 Start Position

1. After POWER OFF or power outage, check the EJECTOR's position with MICOM initialization to restart.
2. How to check if it is in place:
   - Check **HIGH/LOW** signals from HALL SENSOR in MICOM PIN.
3. Control method to check if it is in place:
   (1) EJECTOR is in place,
   - It is an initialized control, so the mode can be changed to ice making control.

   (2) EJECTOR isn't in place:
   A. If EJECTOR is back in place within 2 minutes with the motor on, it is being initialized. If not, go to step B.
   B. If the heater does not return to operate by turning on and off five times for 5 minutes in one cycle, it is being initialized. If not, it is not functioning. Repeat step B with heater and motor off.

7-2-2 Icemaking Mode

1. Icemaking refers to the freezing of supplied water in the ice trays. Complete freezing is assured by measuring the temperature of the Tray with the icemaking SENSOR.
2. Icemaking starts after completion of the water fill operation.
3. The icemaking function is completed when the sensor reaches -7°C, 60 minutes after starting.

NOTE : After icemaker power is ON, the icemaker heater will be on for test for 9 seconds.

7-2-3 Harvest Mode

1. Harvest (Ice removing) refers to the operation of dropping ice into the ice bin from the tray when icemaking has completed.
2. Harvest mode:
   (1) The Heater is ON for 30 seconds, then the motor starts.
   (2) Harvest mode is completed if it reaches start position again while the heater and motor are on at the same time.
   A. ice bin is full : the motor, the heater and the ejector will not operate.
   B. ice bin is not full : The ejector rotates once to open for ice.

NOTE : If the ejector does not rotate once within 5 minutes in status (2), aseparate heater control mode starts operating to prevent the ejector from being constrained. (It is recommended that the user open for ice to return to normal mode.)

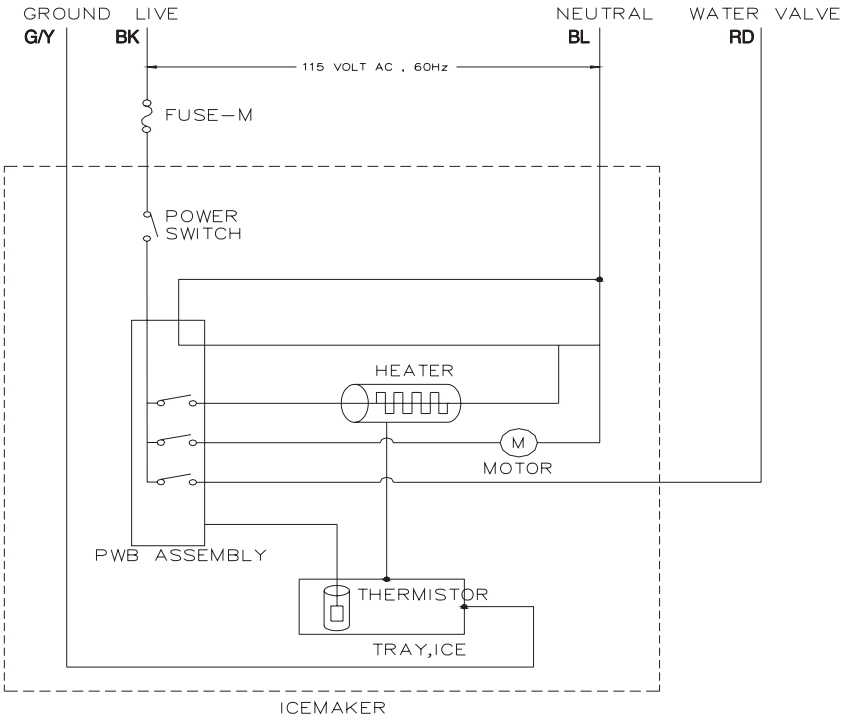

7-2-4 Fill/Park Position

1. Once a normal harvest mode has been completed, the water solenoid will be activated.
2. The amount of water is adjusted by pressing the fill key repeatedly. This changes the time allowed for fill as illustrated in the table below.

Water supply amount table

STAGE	TIME TO SUPPLY	INDICATIONS	REMARKS
1	6 seconds		The water amount will vary depending on the water control switch setting, as well as the water pressure of the connected water line.
2	7 seconds		
3	8 seconds		

NOTE : Below is an example used by another vendor as an explanation of what is taking place.

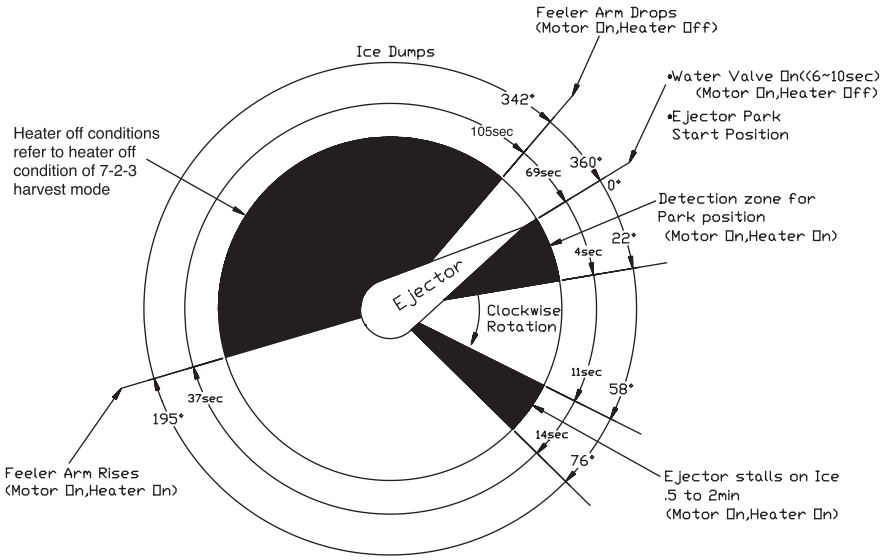

7-2-5 Function TEST

1. This is a compulsory operation for test, service, cleaning, etc. It is operated by pressing and holding the fill key for 3 seconds.
2. The test works only in the icemaking mode. It cannot be entered from the harvest or fill mode. (If there is an ERROR, it can be checked only in the test mode.)
3. Caution! If the test is performed before water in the icemaker is frozen, the ejector will pass through the water. When the fill mode begins (stage 4), unless the water supply has been shut off, added water will overflow into the ice bin. If the control doesn't operate normally in the test mode, check and repair as needed.
4. After water is supplied, the normal cycle is follows: **icemaking → harvest → fill → park position**.
5. Five seconds after stage 5 is completed, the icemaker returns to MICOM control. The time needed to supply water resets to the pre-test setting.

5 stage of diagnosia

STAGE	ITEMS	INDICATOR	REMARKS
1	HEATER		Five seconds after heater starts, heater will go off if temperature recorded by sensor is 50°F(10°C) of lever is in up position
2	MOTOR		Five seconds after heater starts, you can confirm that a motor is moving.
3	HALL IC I (detection of position)		You can confirm hall ic detection of start position.
4	VALVE		Two seconds after detection of start position, you can confirm that valve is on.
5	HALL IC I (detection of full-filled Ice)		You can check whether the Hall IC is sensing a full ice conditioin.(If there is a full-filled error, the fifth stage would no be progressed)
6	Reset	Mark previous status on TEST mode	Five seconds after fifth stage is completed, the icemaker resets to initial status.

7-3 DEFECT DIAGNOSIS FUNCTION

7-3-1 ERROR CODE on water supply control panel at icemaker

NO	DIVISION	INDICATOR	CONTENTS	REMARKS
1	Normal	Mark time to supply	None	Display switch operates properly
2	Ice-Making Sensor malfunction		Open or short-circuited wire	Make sure that the wire on each sensor is connected.

* ERROR indicaors in table can be checked only in TEST mode.

8. DESCRIPTION OF FUNCTION & CIRCUIT OF MICOM

8-1 FUNCTION

8-1-1 Function

1. When the appliance is plugged in, it is set to 37 for Refrigerator and 0 for freezer.
   You can adjust the Refrigerator and the Freezer control temperature by pressing the ADJUST button.
2. When the power is initially applied or restored after a power failure, it is automatically set to 37 & 0.

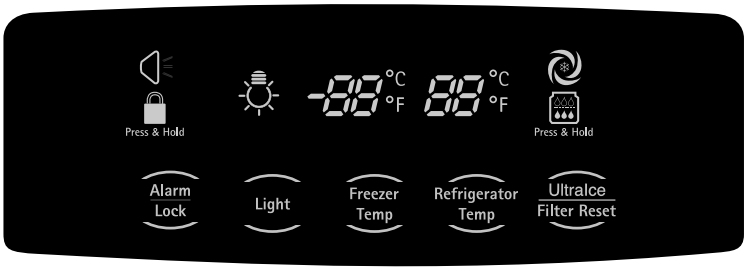

8-1-2 How to Change the Temperature Mode to °F / °C

1. The setting temperature mode can be changed to °F / °C by pressing and holding Freezer Temp. key of Freezer and Refrigerator Temp. key of Refrigerator over 5 seconds.
2. The initial setting is °F. Whenever the mode is changed, the LCD lights are changed.

8-1-3 Lock function (dispenser and display button lock)

1. In power application of refrigerator, the LOCK icon is turned off at the upper side of lock graphic of display with the lock release status.
2. If desiring to lock the display the dispenser and control panel push on the LOCK button more than 3 seconds. LOCK text is turned on at the upper side of lock graphic of display with lock status.
3. The buzzer sound and control panel and dispenser function is not performed even if pressing display button other than lock key in the lock status.
4. If desiring to release the lock status and pressing the lock button more than 3 seconds. LOCK icon is turned off at the upper side of lock graphic of display with the lock release status.

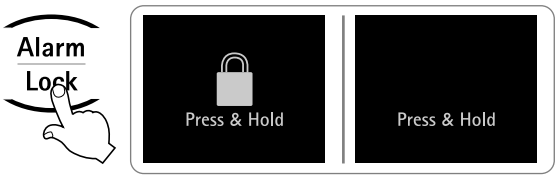

Ex) In selecting LOCK

Ex) In selecting LOCK again

8-1-4 Filter condition display function

1. There is a replacement indicator icon for the water filter cartridge on the dispenser.
2. Water filter needs replacement every months.
3. Water filter icon turns on to tell you need to replace the filter soon.
4. After replace the filter, press and hold the lock button more than 3 seconds.
   Then water filter light turns off with reset status.

Classification	In initial Power On / Filter RESET	Replace indicator light on
Filter Status Display	Press & Hold	Press & Hold

8-1-5 Ultra Ice selection

Please select this function for prompt freezer.

- Function is repeated following below whenever pressing Ultra Ice button.
- Ultra Ice function automatically turns off if a fixed time passes.

8-1-6 CONTROL OF FREEZER FAN MOTOR

1. Freezer fan motor has high and standard speeds.
2. High speed is used at power-up, for Ultra Ice, and when refrigerator is overloaded.
   Standard speeds is used for general purposes.
3. To improve cooling speed, the RPM of the freezer fan motor change from normal speed to high.
4. High speed (2700RPM) : Initial power on or load corresponding operation, Ultra Ice.
   Normal speed (2400RPM) : General working conditions.
5. Fan motor stops when refrigerator or freezer door opens.

8-1-7 Ultra Ice

1. The purpose of this function is to intensify the cooling speed of freezer and to increase the amount of ice.
2. When Ultra Ice is selected, LCD will remain ON for Ultra Ice Cycle.
3. If power is lost to the refrigerator, Ultra Ice function will be canceled.
4. To activate this function, to press the Ultra Ice key and the LCD will turn ON. This function will remain activated for 24 hours.
   The first three hours the compressor and Freezer Fan will be ON. The next 21 hours the freezer will be controlled at the lowest temperature. After 24 hours or if the Ultra Ice key is pressed again, the freezer will return to its previous temperature.
5. For the first three hours notice the following cases:
   (1) Compressor and freezer fan (HIGH RPM) continuously operate for three hours.
   (2) If defrost starts during Ultra Ice, Ultra Ice operates for the rest of time after defrost is completed, when Ultra Ice operation time is less than 90 minutes.
   If Ultra Ice operates for more than 90 minutes, the Ultra Ice will operate for two hours after defrost is completed.
   (3) If Ultra Ice is pressed during defrost, Ultra Ice LCD is on but this function will start seven minutes after defrost is completed and it shall operate for three hours.
   (4) If Ultra Ice is selected within seven minutes after compressor has stopped, the compressor (compressor delays seven minutes) shall start after the balance of the delay time.
   (5) The fan motor in the freezer compartment runs at high speed during Ultra Ice .
6. For the rest of the 21 hours, the freezer will be controlled at the lowest temperature.

8-1-8 REFRIGERATOR LAMP AUTO OFF

1. To avoid heat damage caused by the lamp, it is turned off automatically when the refrigerator door is open for more than 7 minutes.

8-1-9 Alarm for Open Door

1. This feature sounds a buzzer when the freezer or refrigerator door is not closed within 1 minute after it is opened.
2. One minute after the door is opened, the buzzer sounds three half-second beeps. These tones repeat every 30 seconds.
3. The alarm is cancellcd when the freezer or the refrigerator is closed while the buzzer sounds.

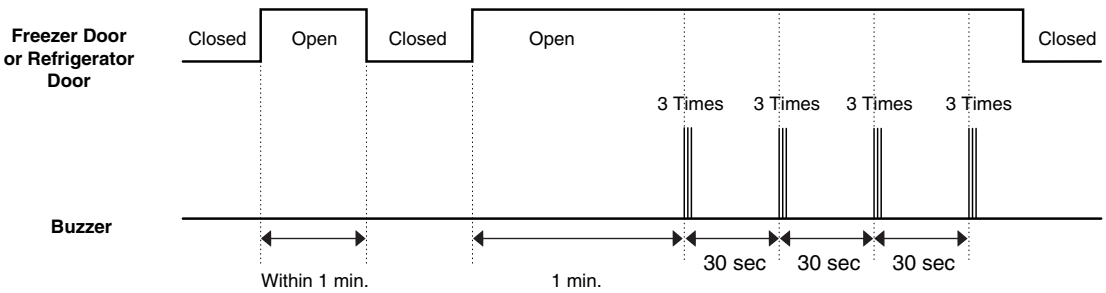

8-1-10 Buzzer Sound

When the button on the front Display is pushed, a Ding~ Dong~ sound is produced.

8-1-11 Defrost cycle

1. A defrost cycle will be initiated after 4 hours of accumulated compressor run time after the initial power up or a power failure.
2. After the initial defrost, the defrost cycle is initiated between 7~50 hours and 50 hours of accumulated compressor run time according to door open time.
3. The defrost cycle will be terminated once the defrost sensor reaches 46° F (8° C).

8-1-12 Filter Replacement Indication

1. After 6 months since the UNIT (refrigerator) has been powered on, the water filter icon is tumed sON.
2. When the water filter indicator LCD is illuminated, you should change the water filter. After this, you must press the water filter button for three seconds and you will hear a ding-dong sound.
   The icon will be OFF. This operation will indicate that the UNIT is reset to its initial conditions, so this process is restarted.

8-1-13 DISPENSER LIGHT

Please select this function for DISPENSER LIGHT MODE.
1. Normal status (LIGHT icon is OFF) : When dispenser is operated, DISPENSER LIGHT is ON.
2. ON status (LIGHT icon is ON) : DISPENSER LIGHT is on continuously.

8-1-13 Automatic Diagnosis Function

1. Automatic diagnosis makes servicing the refrigerator easy.
2. When an error occurs, the buttons will not operate; but the tones. such as ding. will sound.
3. When the error CODE removes the sign, it returns to normal operation (RESET).
4. The error CODE shows on the refrigerator and freezer display.

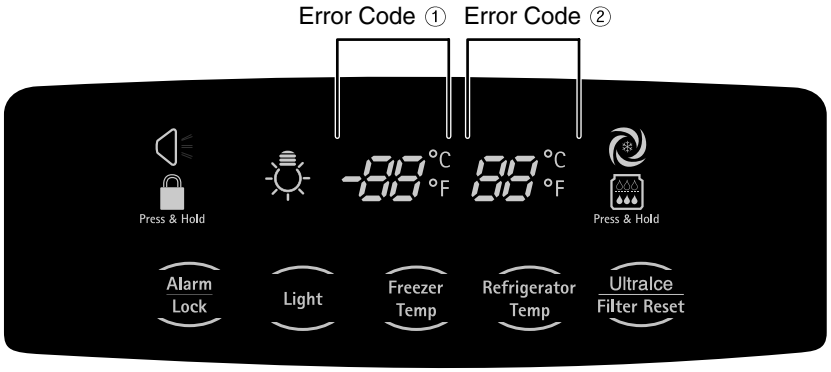

ERROR CODE on display panel

NO	ITEM	ERROR CODE		CONTENTS	REMARKS
		①	②		
1	Failure of freezer sensor	Er	FS	Cut or short circuit wire	Inspect Commecting wires on each sensor
2	Failure of Refrigerator sensor	Er	rS	Cut or short circuit wire	
3	Failure of defrost sensor	Er	dS	Cut or short circuit wire	
4	Failure of Room Temperature sensor	* NOTE 1		Cut or short circuit wire	
5	Failure of defrost mode	Er	dH	When defrost sensor doesn't reach 46°F (8°C). within 1 hour after starting defrost	Snapping of defrost heater or Temperature fuse, pull-out of connector (indicated minimum 1 hour after failure occurs)
6	Failure of BLDC Fan Motor at Freezing Compartment	Er	FF	If there is no fan motor signal for more than 65sec in operation fan motor	Poor motor, hooking to wires of fan, contact of structures to fan, snapping or short circuit of Lead wires
7	Failure of BLDC Fan Motor a Mechanical Room	Er	CF	If there is no fan motor signal for more than 65sec in operation fan motor	Poor motor, hooking to wires of fan, contact of structures to fan, snapping or short circuit of Lead wires
8	Failure of communication	Er	CO	If there is no signal for Communication between Main PCB and display PCB	Short or open of lead wire connecting between main PCB and display PCB, transmission TR and receiving part

* NOTE1) In case of Room Temperature Sensor Error, "Er rt" appears on the Display when Ultra Ice button and Freezer Temp button pressed at the same time for one second.

⁎ LCD check function : If simultaneously pressing Ultra Ice button and freezing temperature adjustment button for a second, display LCD graphics on. If releasing the button, the LCD graphic displays the previous status.

8-1-14 TEST Mode

1. The test mode allows checking the PCB and the function of the product as well as finding out the defective part in case of an error.
2. The test mode is operated by pressing test buttons at main PCB controller.
3. While in the test mode, the function control button is not recognized, but the recognition tone (beep~) sounds.
4. After exiting the test mode, be sure to reset by unplugging and then plugging in the appliance.
5. If an error, such as a sensor failure, is detected while in the test mode, the test mode is cleared and the error code is displayed.
6. While an error code is displayed, the test mode will not be activated.

MODE	MANIPULATION	CONTENTS	REMARKS
TEST1	Push TEST Switch (in the main board) once.	1) Continuous operation of the COMPRESSOR and the Freezer fan 2) Stepping DAMPER OPNE 3) Defrosting HEATER OFF 4) DISPLAY LCD all ON	
TEST2	Push TEST Switch once in TEST MODE 1	1) Continuous operation of the COMPRESSOR and the Freezer fan 2) Stepping DAMPER OPNE 3) Defrosting HEATER OFF 4) DISPLAY LCD shows no.2	
TEST3	Push TEST Switch once in TEST MODE 2	1) Continuous operation of the Freezer fan OFF 2) Stepping DAMPER OPNE 3) Defrosting HEATER ON 4) DISPLAY LCD shows no.3	Reset if the Temperature of the Defrosting Sensor is 46°F (8°C) or more.
RESET	Push TEST Switch once in TEST MODE 3	Reset to the previously setting Before TEST MODE.	The compressor will Start after a 7-minute delay.

* Freezer Fan RPM Variable Check:
In case the freezer fan is in operation when the Ultra Ice button and freezing temp. button are pressed for more than one second at the same time freezer fan RPM changes. (for example if high speed to normal speed or if normal speed, to high speed for 30 seconds)
After 30 seconds, it turns to its original RPM.

* Demonstration MODE:
1. After opening the door, when the Ultra Ice button and the Refrigerator Temperature Control button are pushed at the same time and hold for 5 seconds or longer, it converts to Demonstration Mode.
2. The Display shows OFF in F/R temperature display.
3. In this status, all Loads are off (Compressor / Fan / Damper / Heater)
   (The refrigerator Lamp automatic off function warks normally and can be demonstrated)
4. To release demonstration mode, reset display by pressing the Ultra Ice button and the Refrigerator Temperature Control button at the same time and holding for 5 seconds or longer in status of open the door.

8-2 PCB FUNCTION

8-2-1 Power Circuit

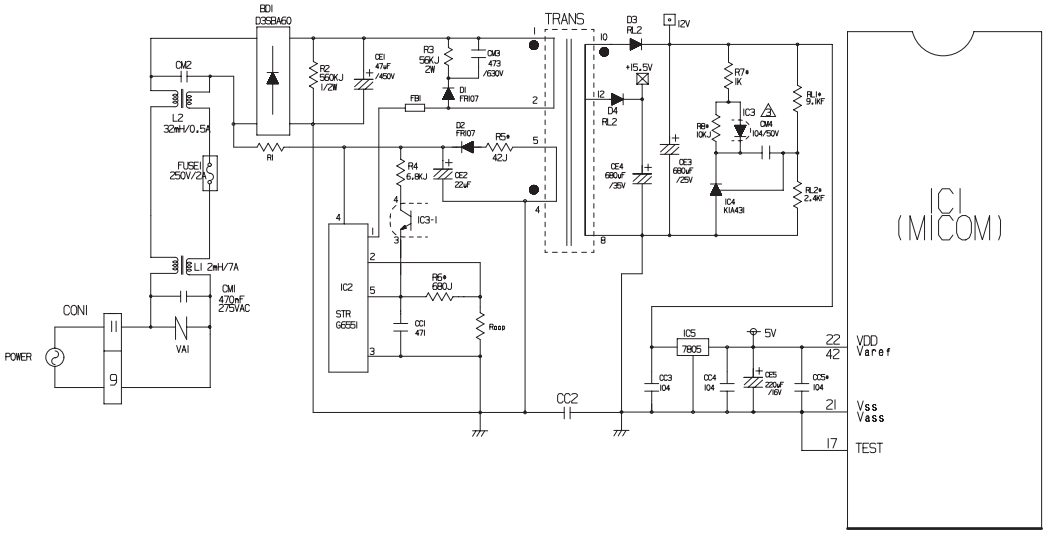

The secondary part of the TRANSFORMER is composed of the power supply for the display, the BLDC FAN Motor drive (15.5 V), the relay drive (12 Vdc) and the MICOM and IC (5 Vdc).
The voltage for each part is as follows:

PART	VA 1	CE 3	CE 4	CE 5
VOLTAGE	115 Vac	12 Vdc	15.5 Vdc	5 V

VA1 is a part for preventing over voltage and noise. When 385V or higher power is applied, the inside elements are short-circuited and broken, resulting in blowout of the fuse in order to protect the elements of the secondary part of the TRANSFORMER.

8-2-2 Oscillation Circuit

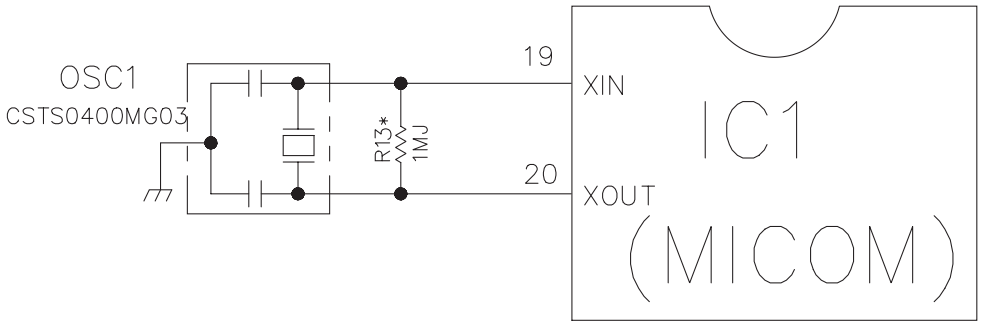

This circuit generates the base clock for calculating time and the synchro clock for transmitting data from and to the inside logic elements of the IC1 (MICOM). Be sure to use specified replacement parts, since calculating time by the IC1 may be changed. If changed, the OSC1 SPEC will not work.

8-2-3 Reset Circuit

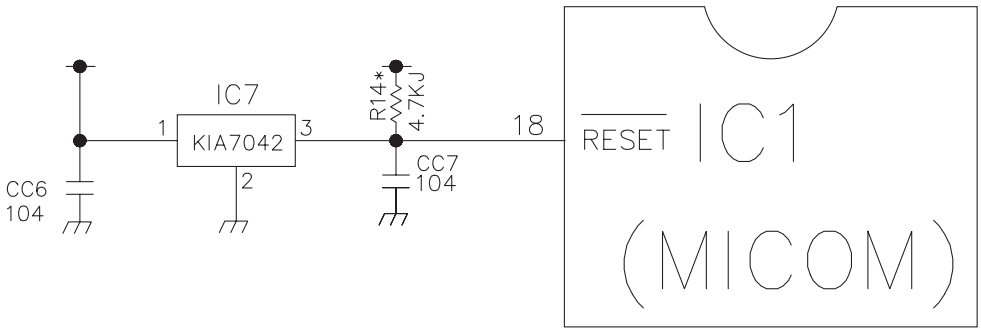

The RESET circuit allows all the functions to start at the initial conditions by initializing various parts, including the RAM inside the MICOM (IC1) when the power is initially supplied or the power supply to the MICOM is restored after a momentary power failure. For the initial 10ms of power supply, LOW voltage is applied to the MICOM RESET terminal. During a normal operation, 5V is applied to the RESET terminal. (If a malfunction occurs in the RESET IC, the MICOM will not operate.)

8-2-2 Load / Buzzer Drive & Open Door Detection Circuit

1. Load Drive Condition Check

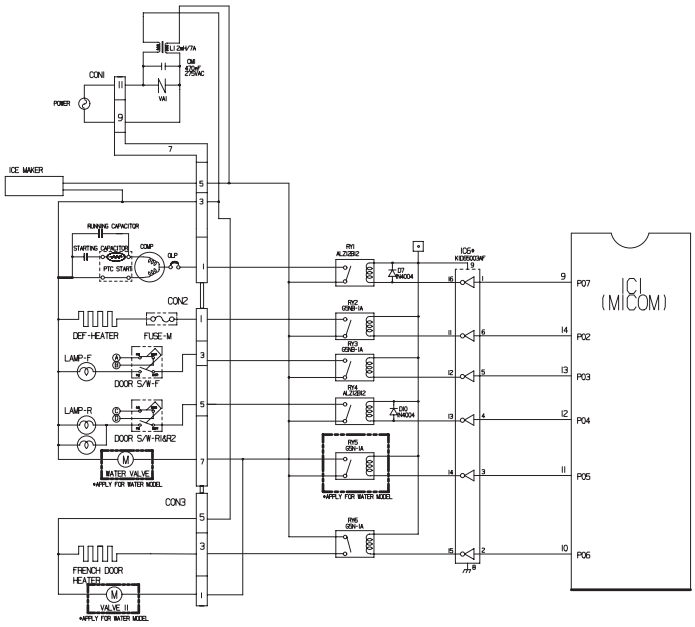

Circuit	Pin Number	Pin Number	Output Voltage
Compressor	Con1 pin1	Con1 pin3	115 VAC
Defrost heater	Con2 pin1	Con1 pin3	115 VAC
F,R-lamp	Con2, pins 3 and 5	Con1 pin3	115 VAC
Water valve	Con2 pin7	Con1 pin3	115 VAC
Frech Door	Con3 pin3	Con1 pin3	115 VAC
Heater Water valve II	Con3 pin1	Con1 pin3	115 VAC

To measure outputs of the control board, check voltages between the pins for the following components:

NOTE: When the door of the freezer/refrigerator is left open for 7 minutes or longer, the lamp turns off automatically.

2. Fan motor driving circuit (freezing compartment fan, mechanical room)

1. This circuit makes standby power 0 by cutting off power supplied to ISs inside of the fan motor in the fan motor OFF.
2. This is a circuit to perform a temporary change of speed for the fan motor and applies DC voltage up to 7.5V ~ 16V to motor.
3. This circuit prevents over-driving the fan motor by cutting off power applied to the fan motor in the lock of fan motor by sensing the operation RPM of the fan motor.

	F-FAN	C-FAN
Pin Number	Pin1 & 2 of con4	Pin4 & 5 of con4
MOTOR OFF	2V or less	2V or less
MOTOR ON	13V ~ 15V	11V ~ 15V

3. Open Door Detection Circuit Check

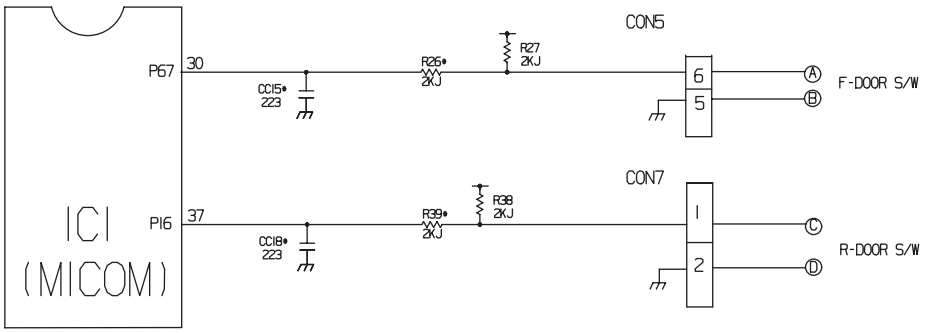

8-2-3 Temperature Sensor Circuit

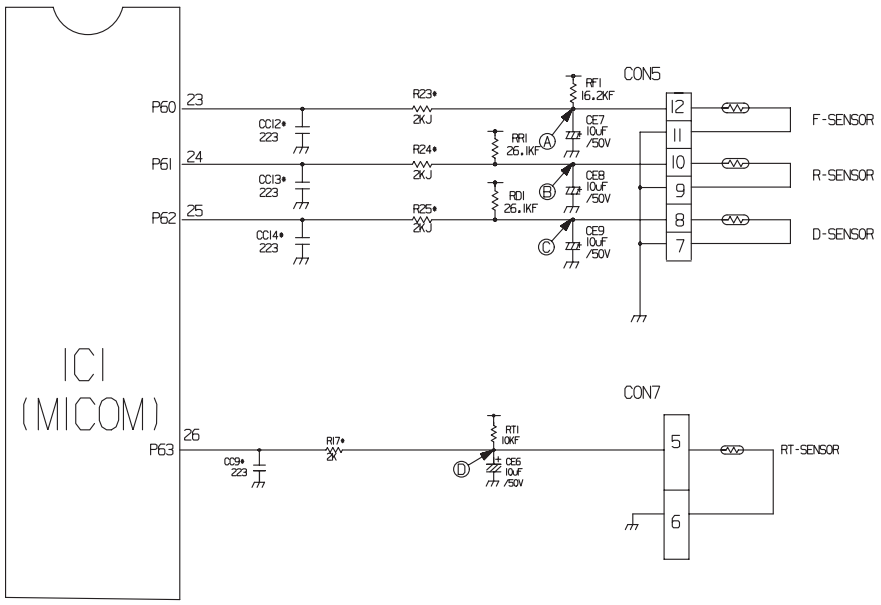

The upper circuit reads refrigerator temperature, freezer temperature, and defrost sensor temperature for defrosting and the indoor temperature for compensating for the surrounding temperature into MICOM.
Opening or short state of each temperature sensor are as follows:

SENSOR	CHECK POINT	NORMAL (-30°C ~ 50°C)	SHORT-CIRCUITED	OPEN
Freezer sensor	POINT Ⓐ Voltage	0.5 V ~ 4.5 V	0 V	5 V
Refrigerator sensor	POINT Ⓑ Voltage			
Defrosting sensor	POINT Ⓒ Voltage			
Room Temperature sensor	POINT Ⓓ Voltage			

8-2-4 Refrigeration Compartment Stepping Motor Damper Circuit

A reversible DC motor is used to open and close the damper.
To open the damper, push test button once.
To close the damper, push test button twice.

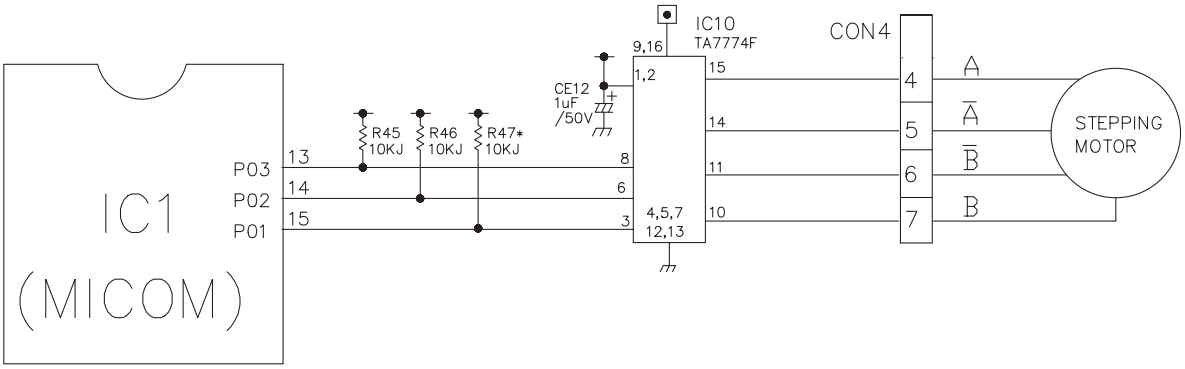

8-3 RESISTANCE SPECIFICATION OF SENSOR

TEMPERATURE	RESISTANCE OF FREEZER SENSOR	RESISTANCE OF REFRIGERATOR & DEFROST SENSOR & ROOM SENSOR
- 20 °C	22.3 kΩ	77 kΩ
- 15 °C	16.9 kΩ	60 kΩ
- 10 °C	13.0 kΩ	47.3 kΩ
- 5 °C	10.1 kΩ	38.4 kΩ
0 °C	7.8 kΩ	30 kΩ
+ 5 °C	6.2 kΩ	24.1 kΩ
+ 10 °C	4.9 kΩ	19.5 kΩ
+ 15 °C	3.9 kΩ	15.9 kΩ
+ 20 °C	3.1 kΩ	13 kΩ
+ 25 °C	2.5 kΩ	11 kΩ
+ 30 °C	2.0 kΩ	8.9 kΩ
+ 40 °C	1.4 kΩ	6.2 kΩ
+ 50 °C	0.8 kΩ	4.3 kΩ

- The resistance of the SENSOR has a ±5% tolerance.
- Measure the resistance of the SENSOR after leaving it for over 3 minutes in the measuring temperature.
  This delay is necessary due to sensor response speed.

8-3 TROUBLESHOOTING

PROBLEM	INDICATED BY	CHECK	CHECKING METHOD	CAUSE	SOLUTION
POWER SOURCE is poor.	1. The whole DISPLAY LCD is off.	1. FREEZER/ REFRIGERATOR.	Check if FREEZER/REFRIG ERA TOR DOOR IS OPEN and check display.	POWER SOURCE is poor.	Use boosting TRANS.
	2. DISPLAY LCD DISPLAY operates abnormally	2. If LAMP is dim.	Check visually.	Applied voltage error.	Reconnect CONNECTOR.
		3. The connection of the MAIN PWB CONNECTOR.	Check connection of CONNECTOR.	CONNECTOR connection is poor.	Replace TRANS.
				TRANS FUSE is open.	Replace COMPRESSOR.
COOLING is poor.	NO COOLING.	1. If the COMPRESSOR operates.	USE TEST MODE1 (forced COOLING). If less than 7 minutes pass after compressor shuts off, don't press the KEY and wait.	COMPRESSOR locked or blocked.	Replace OLP, PTC.
				OLP, PTC is poor. COMPRESSOR RELAY is poor.	Replace MAIN PWB.
				THE CONNECTING WIRE is poor.	Check the connection of the black wire of the MAIN PWB CONNECTOR (CON1).
		2. If refrigerant is leaking.	Measure the amount of frost sticking on EVAPORATOR and the surface temperature of the condenser pipe.	Refrigerant leakage.	Replace the leaking part and replace any lost refrigerant.
	FREEZER TEMPERATURE is incorrect	1. If FAN MOTOR operates.	USE TEST MODE1 (forced COOLING).	FAN MOTOR is poor.	Replace the FAN MOTOR.
				CONNECTING WIRE is poor.	Certify the MOTOR and the connection of the black wire of the MAIN PWB CONNECTOR (CON1).
		2. If DEFROSTING is normal.	Check the amount of frost sticking on the EVAPORATOR .	DEFROSTING is poor.	See DEFROSTING is poor.
		3. If SENSOR is normal.	of the Refrigerator SENSOR.	SENSOR RESISTANCE is poor.	Replace SENSOR.
		4. Door liner contact.	Check the seal when the door is closed.	Door liner damaged.	Replace door liner.

PROBLEM	INDICATED BY	CHECK	CHECKING METHOD	CAUSE	SOLUTION
COOLING is poor.	If REFRIGERATOR TEMPERATURE is too low.	1. If FREEZER TEMPERATURE is normal.	Check is FREEZER TEMPERATURE is too low.		Make sure the DOOR isattached.
		2. If amount of cool air from FAN MOTOR is sufficient.	Make sure that the amount and speed of cool air are sufficient by touching the check supplied on the REFRIGERATOR.	FAN MOTOR is poor.	Replace FAN MOTOR.
				Passage of cool air is blocked.	Remove impurities.
				Evaporator frozen.	See DEFROSTING is poor.
		3. Door Line contact.	Check door seal when door is closed.	Door liner damaged.	Replace Door liner.
DEFROSTING is poor.	NO DEFROSTING.	1. If HEATER emits heat.	USE TEST MODE3 (forced DEFROSTING).	HEATER disconnection.	Replace HEATER.
				TEMPERATURE FUSE disconnection.	Replace TEMPERATURE FUSE.
				Connection is poor.	Check EVAPORATOR connection and wire of MAIN PWB CONNECTOR.
				DEFROST-SENSOR is poor.	Replace DEFROST-SENSOR.
				HEATER RELAY is poor.	Replace RY2 of MAIN PWB.
		2. If DRAIN PIPE is blocked.	Check DRAIN PIPE.	DRAIN PIPE is blocked.	Remove ice and impurities.
					Check HEATER PLATE resistance.
		3. If ice remains after DEFROSTING.	Make sure that DEFROST SENSOR is connected.	Connection is poor.	Reassemble the DEFROST-SENSOR.
			Make sure that FREEZER /REFRIGERATOR DOOR is closed.	DOOR does not close properly.	Reassemble DOOR.
					Replace GASKET.

8-4 MAIN PWB ASSEMBLY AND PARTS LIST

8-4-1 Main PWB Assembly

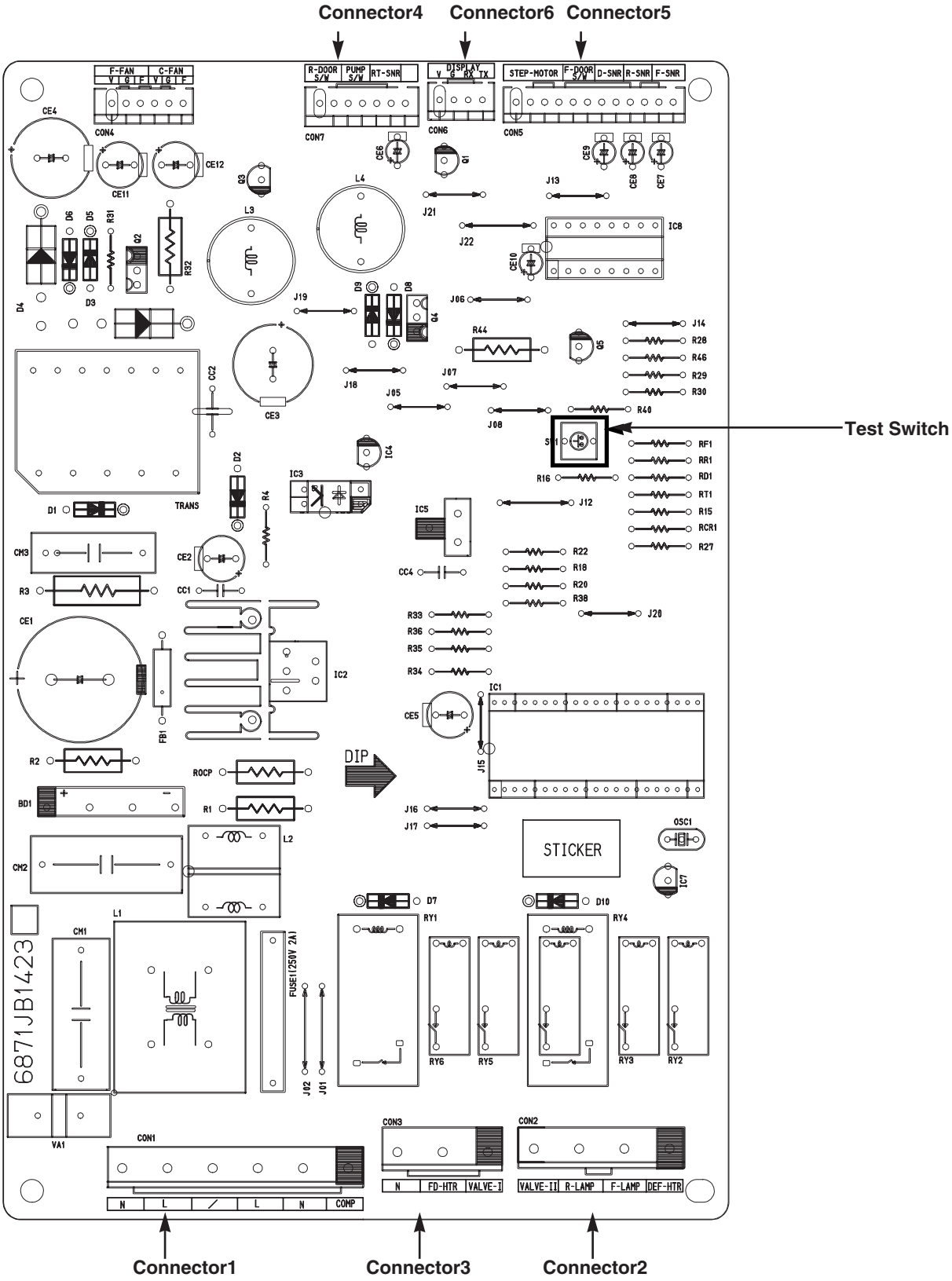

REPAIR
PARTS
LIST

MODELS No.

795.78542.805
795.78543.805
795.78544.805
795.78546.805
795.78549.805
795.78552.805
795.78553.805
795.78554.805
795.78556.805
795.78559.805

The model number of your refrigerator is found on the serial plate inside.

All repair parts listed are available for immediate purchase or special order when you visit your nearest Sears Service Center, or the Service Department at most Sears stores. To order parts by phone, call the toll free parts number listed to the left.

When requesting service or ordering parts, always provide the following information:

- Product Type
- Part Number
- Model Number
- Part Description

To call
Toll Free
For Parts:

1-800-366-PART
(1-800-366-7278)

For Service:

1-800-4-MY-HOME
(1-800-469-4663)

(Last Revision: January. 15. 2009)

Sears, Roebuck and Co., Hoffman Estates, IL 60179 U.S.A.

Get it fixed, at your home or ours!

Your Home

For repair—**in your home**—of **all** major brand appliances, lawn and garden equipment, or heating and cooling systems, **no matter who made it, no matter who sold it!**

For the replacement parts, accessories and owner s manuals that you need to do-it-yourself.

For Sears professional installation of home appliances and items like garage door openers and water heaters.

1-800-4-MY-HOME¤ **(1-800-469-4663)**
Call anytime, day or night (U.S.A. and Canada)
www.sears.com **www.sears.ca**

Our Home

For repair of carry-in items like vacuums, lawn equipment, and electronics, call or go on-line for the location of your nearest **Sears Parts & Repair Center.**

1-800-488-1222
Call anytime, day or night (U.S.A. only)
www.sears.com

To purchase a protection agreement (U.S.A.) or maintenance agreement (Canada) on a product serviced by Sears:

1-800-827-6655 (U.S.A.) **1-800-361-6665** (Canada)

Para pedir servicio de reparaci n a domicilio, y para ordenar piezas:
1-888-SU-HOGARSM
(1-888-784-6427)

Au Canada pour service en fran ai s:
1-800-LE-FOYERSM
(1-888-533-6937)
www.sears.ca

¤ Registered Trademark /™ Trademark /SM Service Mark of Sears, Roebuck and Co.
¤ Marca Registrada /™ Marca de F bri ca /SM Marca de Servicio de Sears, Roebuck and Co.
MC Marque de commerce /MD Marque d po s e de Sears, Roebuck and Co.
' Sears, Roebuck and Co.

ICEMAKER PARTS

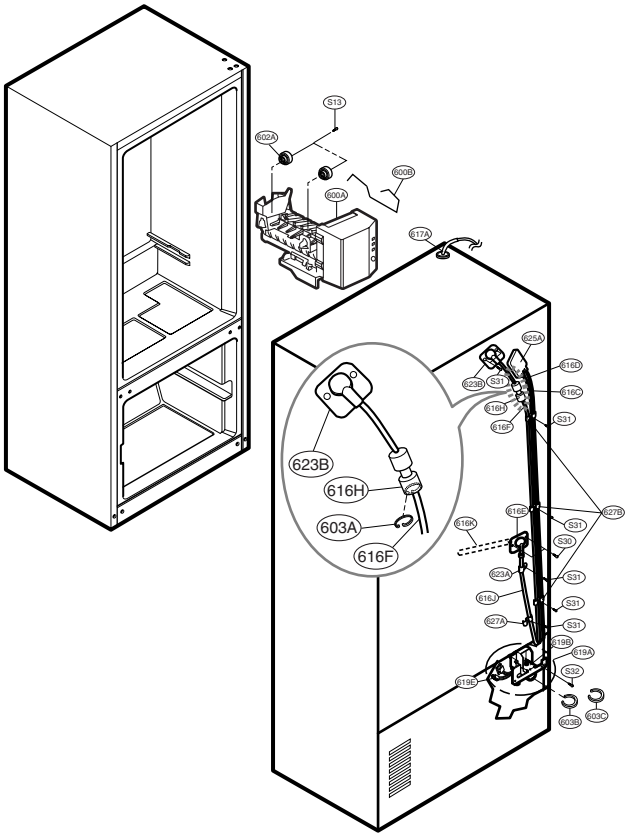

LOC No.	785**	Description
600A	AEQ57518202	Ice Maker Assembly,Kit
600B	MFC39371401	Lever,Ice Maker
603A	4930JA3093B	Holder,Bracket
603B	4930JA3091A	Holder,Bracket
603C	4004JA3002A	Clip
616C	5210JA3004U	Tube,Plastic
616E	5211JA3003E	Tube Assembly,Inject
616F	5210JA3004R	Tube,Plastic
616H	MCD38280804	Connector,Tube
616K	MJU47992202	Tube,Inject
617A	4970JA3004Q	Spring
619A	AJU72909001	Valve Assembly,Water
619B	5221JB2006K	Valve Assembly,Water
619E	6877JK2014B	Drawing,Assembly
623A	4770JA3001A	Band
623B	5006JJ2009A	Cap,Cover
625A	3550JA2184B	Cover,Tube
627A	4930JJ3018A	Holder,Pipe
602A	4930JA3090A	Holder,Bracket
616D	5210JA3005Q	Tube,Plas stic
627B	4930JA3054A	Holder,Pipe
616J	5210JA3005N	Tube,Plastic
S30	1SZZJJ3003D	Screw,Cus tomized
S31	4J00415D	Screw,Cus tomized
S32	4000W4A003A	Screw,Cus tomized

CAUTION: Use the part number to order the part, not the pos ition number.

Part No. MFL47912429

CASE PARTS

CAUTION: Us e the part number to order the part, not the pos ition number.

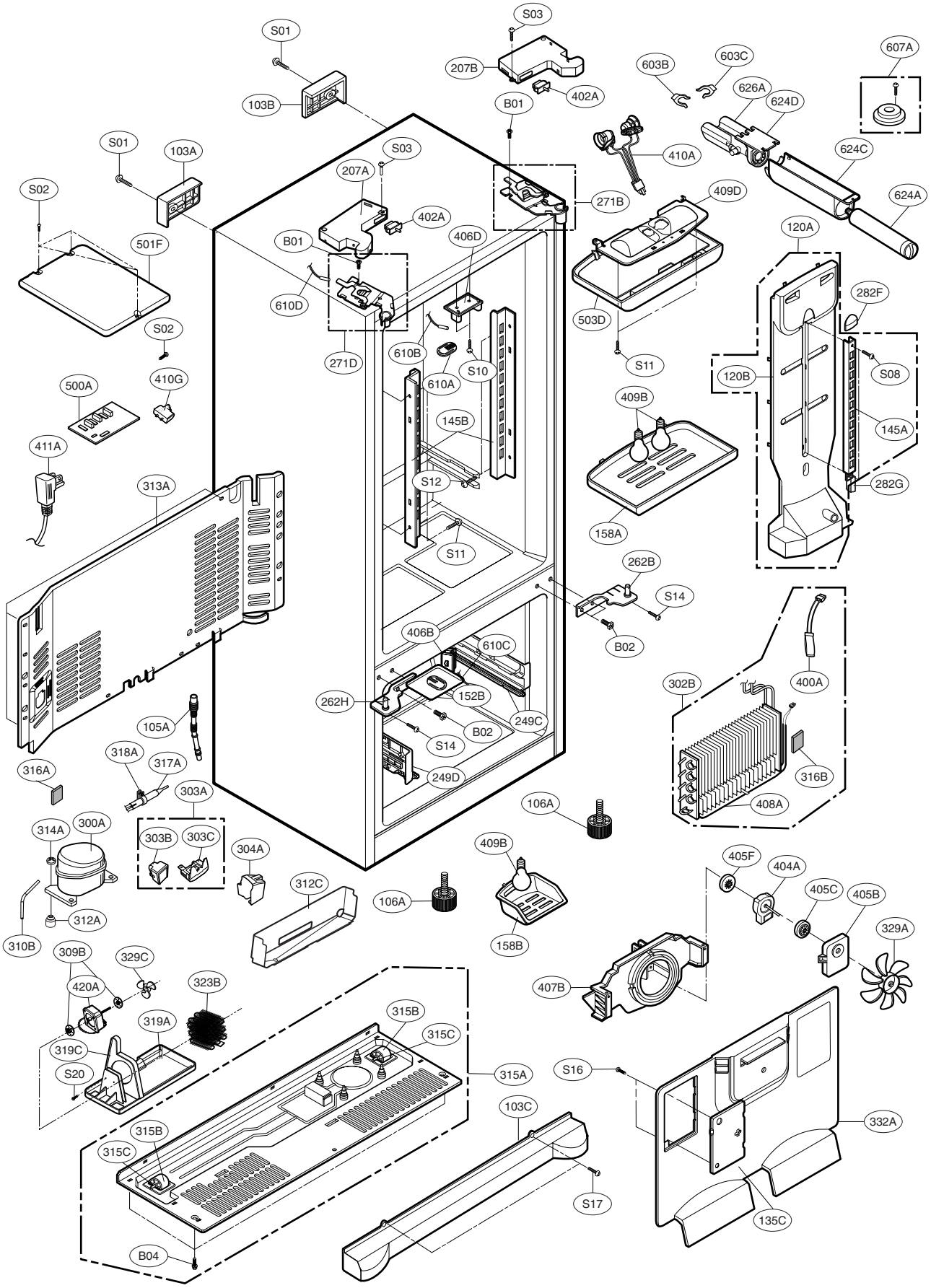

CASE PARTS

LOC No.	785*3	785*6	785*2	785*9	785*4	Des cription
103A	3650JA2061X	3650JA2061X	3650JA2061B	3650JA2113N	3650JA2061V	Handle,Rear
103B	3650JA2061W	3650JA2061W	3650JA2061A	3650JA2113P	3650JA2061U	Handle,Rear
103C	ACQ55957504	ACQ55957504	ACQ55957501	ACQ55957503	ACQ55957502	Cover Assembly, Lower
105A	5251JA3003D	5251JA3003D	5251JA3003D	5251JA3003D	5251JA3003D	Tube As s embly,Drain
106A	AFC72909201	AFC72909201	AFC72909201	AFC72909201	AFC72909201	Leg As sembly,Adjust
120A	ADJ36702003	ADJ36702003	ADJ36702003	ADJ36702003	ADJ36702003	Duct Assembly, Multi
120B	MCZ47932701	MCZ47932701	MCZ47932701	MCZ47932701	MCZ47932701	Duct,Multi
135C	3550JA2263A	3550JA2263A	3550JA2263A	3550JA2263A	3550JA2263A	Cover,Grille Fan
145A	4930JA2080C	4930JA2080C	4930JA2080C	4930JA2080C	4930JA2080C	Holder,Shelf
145B	4930JA2081C	4930JA2081C	4930JA2081C	4930JA2081C	4930JA2081C	Holder,Shelf
152B	MCK39131501	MCK39131501	MCK39131501	MCK39131501	MCK39131501	Cover,Sensor
158A	3550JJ1070B	3550JJ1070B	3550JJ1070B	3550JJ1070B	3550JJ1070B	Cover,Lamp
158B	3550JA1386B	3550JA1386B	3550JA1386B	3550JA1386B	3550JA1386B	Cover,Lamp
207A	3550JJ1097Q	3550JJ1097Q	3550JJ1097A	3550JJ1097E	3550JJ1097C	Cover,Hinge
207B	3550JJ1097R	3550JJ1097R	3550JJ1097B	3550JJ1097F	3550JJ1097D	Cover,Hinge
249C	MEG56923601	MEG56923601	MEG56923601	MEG56923601	MEG56923601	Holder, Rail
249D	MEG56923602	MEG56923602	MEG56923602	MEG56923602	MEG56923602	Holder, Rail
262B	AEH71135346	AEH71135346	AEH71135346	AEH71135350	AEH71135346	Hinge As sembly,Center
262H	AEH71135348	AEH71135348	AEH71135348	AEH71135352	AEH71135348	Hinge As sembly,Center
271B	AEH60614102	AEH60614102	AEH60614102	AEH60614102	AEH60614102	Hinge As sembly,Upper
271D	AEH60614101	AEH60614101	AEH60614101	AEH60614101	AEH60614101	Hinge As sembly,Upper
282G	5006JA3111A	5006JA3111A	5006JA3111A	5006JA3111A	5006JA3111A	Cap,Duct
282F	MBL38019501	MBL38019501	MBL38019501	MBL38019501	MBL38019501	Cap,Duct
300A	TCA34638901	TCA34638901	TCA34638901	TCA34638901	TCA34638901	Compressor,Assembly
302B	5421JJ1003B	5421JJ1003B	5421JJ1003B	5421JJ1003B	5421JJ1003B	Evaporator Assembly
303A	EBG31940241	EBG31940241	EBG31940241	EBG31940241	EBG31940241	Thermistor Assembly,PTC
303B	EBG60658602	EBG60658602	EBG60658602	EBG60658602	EBG60658602	Thermistor Assembly,PTC
303C	6750C-0004U	6750C-0004U	6750C-0004U	6750C-0004U	6750C-0004U	Overload Protect
304A	3550C-0042C	3550C-0042C	3550C-0042C	3550C-0042C	3550C-0042C	Cover,Relay
309B	5040JJ2001A	5040JJ2001A	5040JJ2001A	5040JJ2001A	5040JJ2001A	Damper,Motor Support
310B	4J00977P	4J00977P	4J00977P	4J00977P	4J00977P	Pipe,Compressor
312A	5040JA3071A	5040JA3071A	5040JA3071A	5040JA3071A	5040JA3071A	Damper,Compressor
312C	3391JJ2013B	3391JJ2013B	3391JJ2013B	3391JJ2013B	3391JJ2013B	Tray Assembly,Drain
313A	3551JJ2018A	3551JJ2018A	3551JJ2018A	3551JJ2018A	3551JJ2018A	Cover Assembly,Machinery(Rear)
314A	4620JA3015A	4620JA3015A	4620JA3015A	4620JA3015A	4620JA3015A	Stopper,Compressor
315A	3103JJ1001H	3103JJ1001H	3103JJ1001H	3103JJ1001H	3103JJ1001H	Base Assembly,Compressor
315B	4580JJ3001A	4580JJ3001A	4580JJ3001A	4580JJ3001A	4580JJ3001A	Roller
315C	1PZZJA3013B	1PZZJA3013B	1PZZJA3013B	1PZZJA3013B	1PZZJA3013B	Pin,Common
316A	5072JA3003F	5072JA3003F	5072JA3003F	5072JA3003F	5072JA3003F	Damper,Noise
316B	5072JA3003B	5072JA3003B	5072JA3003B	5072JA3003B	5072JA3003B	Damper,Noise
317A	5851JA2007J	5851JA2007J	5851JA2007J	5851JA2007J	5851JA2007J	Drier Assembly
318A	4930JA3034A	4930JA3034A	4930JA3034A	4930JA3034A	4930JA3034A	Holder,Drier
319A	MJS37355401	MJS37355401	MJS37355401	MJS37355401	MJS37355401	Tray,Drip
319C	MEA42257901	MEA42257901	MEA42257901	MEA42257901	MEA42257901	Guide,Fan
323B	ACG36653801	ACG36653801	ACG36653801	ACG36653801	ACG36653801	Condenser Assembly,Wire
329A	5901JA1021A	5901JA1021A	5901JA1021A	5901JA1021A	5901JA1021A	Fan Assembly
329C	ADP36665701	ADP36665701	ADP36665701	ADP36665701	ADP36665701	Fan Assembly
332A	3530JJ0007A	3530JJ0007A	3530JJ0007A	3530JJ0007A	3530JJ0007A	Grille,Fan
400A	6615JB2005H	6615JB2005H	6615JB2005H	6615JB2005H	6615JB2005H	Controller Assembly
402A	6600JB3007B	6600JB3007B	6600JB3007A	6600JB3007E	6600JB3007A	Switch,Push Button
404A	4681JB1027H	4681JB1027H	4681JB1027H	4681JB1027H	4681JB1027H	MOTOR,DC
407B	4810JJ0003B	4810JJ0003B	4810JJ0003B	4810JJ0003B	4810JJ0003B	Bracket,Motor
405B	4810JA2129B	4810JA2129B	4810JA2129B	4810JA2129B	4810JA2129B	Bracket,Motor
405C	5040JA2009B	5040JA2009B	5040JA2009B	5040JA2009B	5040JA2009B	Damper,Motor Support
405F	5040JA2004B	5040JA2004B	5040JA2004B	5040JA2004B	5040JA2004B	Harness, Single
406B	6600JB1010A	6600JB1010A	6600JB1010A	6600JB1010A	6600JB1010A	Switch,Push Button
406D	4931JA3006A	4931JA3006A	4931JA3006A	4931JA3006A	4931JA3006A	Holder Assembly,Gasket
408A	5300JK1005D	5300JK1005D	5300JK1005D	5300JK1005D	5300JK1005D	Heater,Sheath
409B	6912JB2004K	6912JB2004K	6912JB2004K	6912JB2004K	6912JB2004K	Lamp, Incandescent
409D	3034JA1009A	3034JA1009A	3034JA1009A	3034JA1009A	3034JA1009A	Reflecto,Lamp
410A	6621JK2003B	6621JK2003B	6621JK2003B	6621JK2003B	6621JK2003B	Drawing,Assembly
410G	0CZZJB2012J	0CZZJB2012J	0CZZJB2012J	0CZZJB2012J	0CZZJB2012J	Capacitor,Electric Appliance Film,Box
411A	6411JK1006A	6411JK1006A	6411JK1006A	6411JK1006A	6411JK1006A	Power Cord Assembly
420A	4681JB1029D	4681JB1029D	4681JB1029D	4681JB1029D	4681JB1029D	DC Motor Assembly
500A	6871JB1423M	6871JB1423M	6871JB1423M	6871JB1423M	6871JB1423M	PCB Assembly,Main
501F	3551JA2144D	3551JA2144D	3551JA2144D	3551JA2144D	3551JA2144D	Cover As sembly,PCB
503D	3110JJ1014A	3110JJ1014A	3110JJ1014A	3110JJ1014A	3110JJ1014A	Case,Lamp
603B	4930JA3091A	4930JA3091A	4930JA3091A	4930JA3091A	4930JA3091A	Holder,Bracket
603C	4004JA3002A	4004JA3002A	4004JA3002A	4004JA3002A	4004JA3002A	Clip
607A	4931JA3005B	4931JA3005B	4931JA3005B	4931JA3005B	4931JA3005B	Holder Assembly ,Bracket
610A	3550JA2247A	3550JA2247A	3550JA2247A	3550JA2247A	3550JA2247A	Cover,Sensor
610B	6500JB1001K	6500JB1001K	6500JB1001K	6500JB1001K	6500JB1001K	Sensor,Temperature
610C	6500JB2002B	6500JB2002B	6500JB2002B	6500JB2002B	6500JB2002B	Sensor
610D	6500JB2001B	6500JB2001B	6500JB2001B	6500JB2001B	6500JB2001B	Sensor
624A	5231JA2006A	5231JA2006A	5231JA2006A	5231JA2006A	5231JA2006A	Filter Asssembly,water
624C	3550JD1128B	3550JD1128B	3550JD1128B	3550JD1128B	3550JD1128B	Cover,Filter
624D	5230JA2003A	5230JA2003A	5230JA2003A	5230JA2003A	5230JA2003A	Filter,Head
626A	3550JA2279A	3550JA2279A	3550JA2279A	3550JA2279A	3550JA2279A	Cover,Filter

CAUTION: Use the part number to order the part, not the pos ition number.

CASE PARTS

LOC No.	785*3	785*6	785*2	785*9	785*4	Description
B01	4000W4A003A	4000W4A003A	4000W4A003A	4000W4A003A	4000W4A003A	Screw,Customized
B02	1STZJA3004F	1STZJA3004F	1STZJA3004F	1STZJA3004Q	1STZJA3004F	Screw,Customized
B04	1BZZJA2002A	1BZZJA2002A	1BZZJA2002A	1BZZJA2002A	1BZZJA2002A	Bolt,Common
S01	4J00415D	4J00415D	4J00415D	4J00415D	4J00415D	Screw ,Customized
S02	4J00415D	4J00415D	4J00415D	4J00415D	4J00415D	Screw,Customized
S03	4J01424B	4J01424B	4J01424B	4J01424B	4J01424B	Screw,Customized
S08	1SZZJJ3005E	1SZZJJ3005E	1SZZJJ3005E	1SZZJJ3005E	1SZZJJ3005E	Screw,Customized
S10	1SBZJA3004L	1SBZJA3004L	1SBZJA3004L	1SBZJA3004L	1SBZJA3004L	Screw,Customized
S11	3J05696W	3J05696W	3J05696W	3J05696W	3J05696W	Screw,Customized
S12	3J05696W	3J05696W	3J05696W	3J05696W	3J05696W	Screw,Customized
S14	1SZZJJ3010N	1SZZJJ3010N	1SZZJJ3010N	1SZZJJ3010D	1SZZJJ3010N	Screw,Customized
S15	4000W4A003A	4000W4A003A	4000W4A003A	4000W4A003A	4000W4A003A	Screw,Customized
S16	3J05696C	3J05696C	3J05696C	3J05696C	3J05696C	Screw,Customized
S17	4J00415D	4J00415D	4J00415D	1SZZJA3005H	4J00415D	Screw,Customized
S20	1SZZJA3016A	1SZZJA3016A	1SZZJA3016A	1SZZJA3016A	1SZZJA3016A	Screw,Customized

FREEZER PARTS

CAUTION: Use the part number to order the part, not the position number.

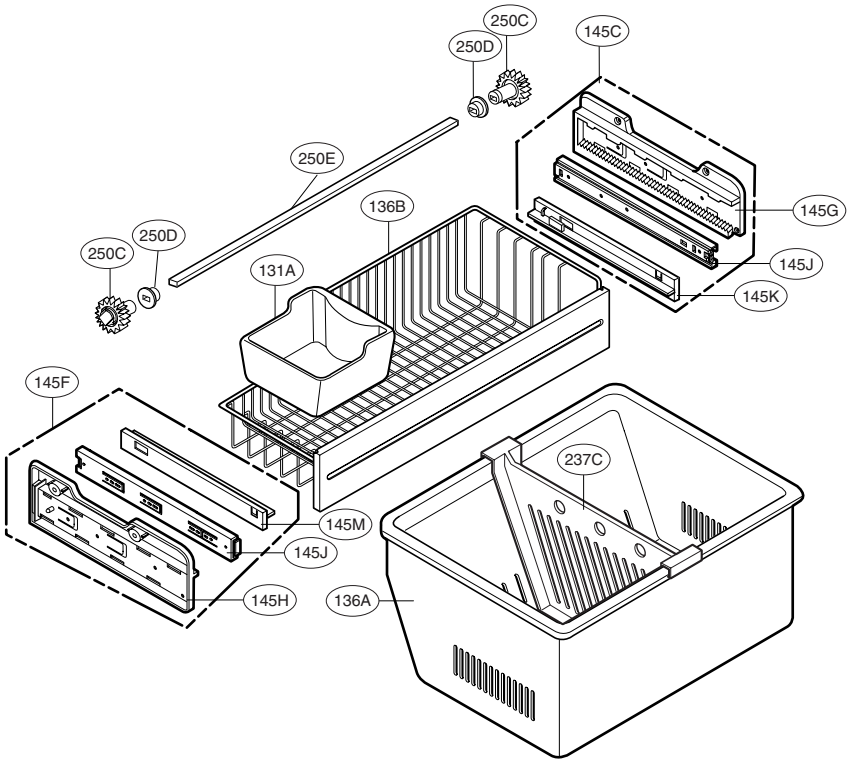

LOC No.	785*3	785*6	785*2	785*9	785*4	Description
131A	5074JA2007A	5074JA2007A	5074JA2007A	5074JA2007A	5074JA2007A	Bucket,Ice
136A	3391JJ2011M	3391JJ2011M	3391JJ2011M	3391JJ2011M	3391JJ2011M	Tray,Drawer
136B	3391JA1114A	3391JA1114A	3391JA1114A	3391JA1114A	3391JA1114A	Tray Assembly,Drawer
145C	4975JA1040B	4975JA1040B	4975JA1040B	4975JA1040B	4975JA1040B	Guide Assembly,Rail
145F	4975JA1040A	4975JA1040A	4975JA1040A	4975JA1040A	4975JA1040A	Guide Assembly,Rail
145G	4974JA1154B	4974JA1154B	4974JA1154B	4974JA1154B	4974JA1154B	Guide,Rail
145H	4974JA1154A	4974JA1154A	4974JA1154A	4974JA1154A	4974JA1154A	Guide,Rail
145J	5218JA1007B	5218JA1007B	5218JA1007B	5218JA1007B	5218JA1007B	Rail,Slide
145K	4932JA1010B	4932JA1010B	4932JA1010B	4932JA1010B	4932JA1010B	Connector,Rail
145M	4932JA1010A	4932JA1010A	4932JA1010A	4932JA1010A	4932JA1010A	Connector,Rail
237C	4974JJ1031A	4974JJ1031A	4974JJ1031A	4974JJ1031A	4974JJ1031A	Guide,Drawer
250C	4470JA2008A	4470JA2008A	4470JA2008A	4470JA2008A	4470JA2008A	Gear,Ice
250D	5006JA2069A	5006JA2069A	5006JA2069A	5006JA2069A	5006JA2069A	Cap,Cover
250E	MAK36519001	MAK36519001	MAK36519001	MAK36519001	MAK36519001	Bar

CAUTION: Use the part number to order the part, not the position number.

REFRIGERATOR PARTS

CAUTION: Use the part number to order the part, not the position number.

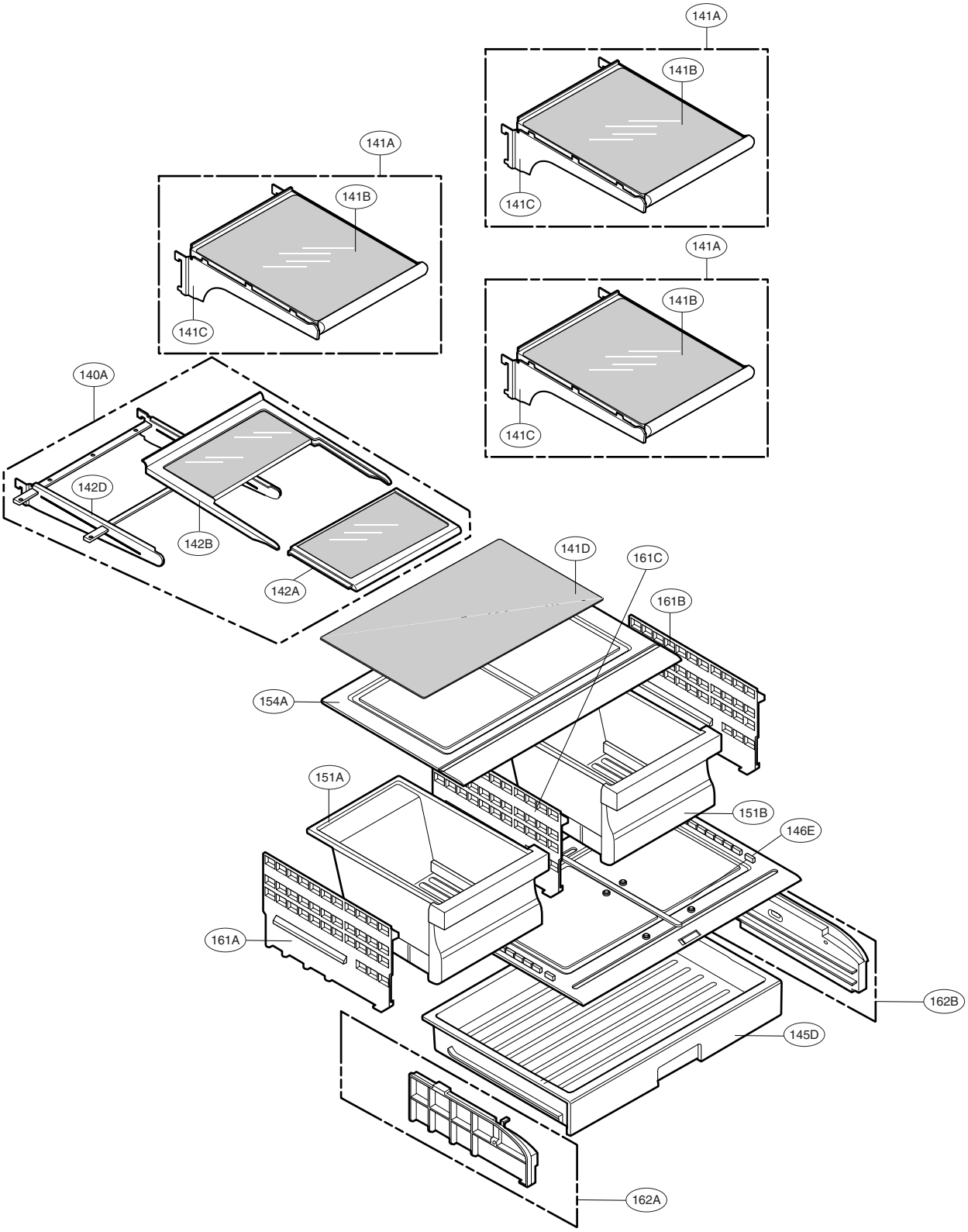

**** : on some models***

REFRIGERATOR PARTS

LOCNo.	785*3	785*6	785*2	785*9	785*4	Description
140A	AHT36706711	AHT36706711	AHT36706711	AHT36706711	AHT36706711	Shelf Assembly,Refrigerator
141A	AHT36764308	AHT36764308	AHT36764308	AHT36764308	AHT36764308	Shelf Assembly,Refrigerator
141B	MHL42265702	MHL42265702	MHL42265702	MHL42265702	MHL42265702	Shelf,Refrigerator
141C	5027JJ2012F	5027JJ2012F	5027JJ2012F	5027JJ2012F	5027JJ2012F	Shelf Assembly,Net
141D	4890JJ1007Y	4890JJ1007Y	4890JJ1007Y		4890JJ1007Y	Cover,Glas s
142A	AHT36963707	AHT36963707	AHT36963707	AHT36963707	AHT36963707	Shelf Assembly,Refrigerator
142B	AHT36963803	AHT36963803	AHT36963803	AHT36963803	AHT36963803	Shelf Assembly,Refrigerator
142D	5027JJ2012K	5027JJ2012K	5027JJ2012K	5027JJ2012K	5027JJ2012K	Shelf Assembly,Net
145D	AJP36700901	AJP36700901	AJP36700901	AJP36700901	AJP36700901	Tray Assembly,Fresh Room
146E	ACQ36701703	ACQ36701703	ACQ36701703	ACQ36701703	ACQ36701703	Cover,Tray
151A	AJP36702111	AJP36702111	AJP36702111	AJP36702111	AJP36702111	Tray Assembly,Vegetable
151B	AJP36702112	AJP36702112	AJP36702112	AJP36702112	AJP36702112	Tray Assembly,Vegetable
154A	ACQ36701107	ACQ36701107	ACQ36701107	ACQ36701107	ACQ36701107	Cover Assembly, TV
161A	AEC36906401	AEC36906401	AEC36906401	AEC36906401	AEC36906401	Guide Assembly,TV
161B	AEC36906402	AEC36906402	AEC36906402	AEC36906402	AEC36906402	Guide Assembly,TV
161C	AEC36702202	AEC36702202	AEC36702202	AEC36702202	AEC36702202	Guide Assembly,Rail
162A	AEC36702301	AEC36702301	AEC36702301	AEC36702301	AEC36702301	Guide Assembly,Rail
162B	AEC36702302	AEC36702302	AEC36702302	AEC36702302	AEC36702302	Guide Assembly,Rail

DOOR PARTS

L /No	785*3	785*6	785*2	785*9	785*4	Description
200A	ADC55707903	ADC55707904	ADC55707902	ADC55707905	ADC55708202	Door Assembly,Freezer
201A	ADD55708801	ADD55709101	ADD55708901	ADD55709001	ADD55709201	Door Foam Assembly,Freezer
203A	MDS38201406	MDS38201406	MDS38201401	MDS38201402	MDS38201401	Gasket,Door
205A	5004JJ1061B	5004JJ1061B	5004JJ1061B	5004JJ1061B	5004JJ1061B	Basket,Door
205B	5004JA2017A	5004JA2017A	5004JA2017A	5004JA2017A	5004JA2017A	Basket,Tilt
205C	5004JA2017B	5004JA2017B	5004JA2017B	5004JA2017B	5004JA2017B	Basket,Tilt
212D	AED37133214	AED37133214	AED37133216	AED37133215	AED37133217	Handle Assembly
212G	3846JD1019B	3846JD1019B	3846JD1019B	3846JD1019B	3846JD1019B	Name Plate
230A	ADC55510539	ADC55510540	ADC55510538	ADC55510542	ADC55510541	Door Assembly,Refrigerator (Right)
230B	ADC55709822	ADC55709823	ADC55709821	ADC55709825	ADC55709824	Door Assembly,Refrigerator (Left)
231A	ADD55510631	ADD55510632	ADD55510630	ADD55510634	ADD55510633	Door Foam Assembly,Refrigerator
231B	ADD55644718	ADD55644719	ADD55644717	ADD55644721	ADD55644720	Door Foam Assembly,Refrigerator
233A	4987JJ2002S	4987JJ2002S	4987JJ2002N	4987JJ2002C	4987JJ2002N	Gasket Assembly,Door
233B	4987JJ2002T	4987JJ2002T	4987JJ2002P	4987JJ2002D	4987JJ2002P	Gasket Assembly,Door
233D	MCK59045802	MCK59045802	MCK59045802	MCK59045802	MCK59045802	Cover Assembly,Front
234A	4430JJ2004A	4430JJ2004A	4430JJ2004A	4430JJ2004A	4430JJ2004A	Cam, Shaft
234B	4430JJ2004B	4430JJ2004B	4430JJ2004B	4430JJ2004B	4430JJ2004B	Cam, Shaft
234C	4931JJ2002E	4931JJ2002E	4931JJ2002E	4931JJ2002E	4931JJ2002E	Cover, Frame
234D	4931JJ2002F	4931JJ2002F	4931JJ2002F	4931JJ2002F	4931JJ2002F	Cover, Frame
241A	AAP33686303	AAP33686303	AAP33686303	AAP33686303	AAP33686303	Basket Assembly,Door
241B	MAN38142901	MAN38142901	MAN38142901	MAN38142901	MAN38142901	Basket,Door
241C	MAN39723202	MAN39723202	MAN39723202	MAN39723202	MAN39723202	Basket,Window
241D	AAP36817401	AAP36817401	AAP36817401	AAP36817401	AAP36817401	Basket Assembly,Door
241E	AAP36817601	AAP36817601	AAP36817601	AAP36817601	AAP36817601	Basket Assembly,Door
243A	4620JJ3006N	4620JJ3006N	4620JJ3006N	4620JJ3006P	4620JJ3006N	Stopper,Door
243B	4620JJ2009A	4620JJ2009A	4620JJ2009A	4620JJ2009A	4620JJ2009A	Stopper,Door
243C	J326-00012A	J326-00012A	J326-00012A	J326-00012A	J326-00012A	Bush
244A	AED37083010	AED37083010	AED37083012	AED37083011	AED37083013	Handle Assembly,Refrigerator
249E	5218JA1010E	5218JA1010E	5218JA1010E	5218JA1010E	5218JA1010E	Rail,Slide
249F	5218JA1010F	5218JA1010F	5218JA1010F	5218JA1010F	5218JA1010F	Rail,Slide
249G	3550JA1455C	3550JA1455C	3550JA1455C	3550JA1455C	3550JA1455C	Cover,Connector
249H	3550JA1455D	3550JA1455D	3550JA1455D	3550JA1455D	3550JA1455D	Cover,Connector
249P	ACJ36625808	ACJ36625808	ACJ36625808	ACJ36625808	ACJ36625808	Connector Assembly
249Q	ACJ36625807	ACJ36625807	ACJ36625807	ACJ36625807	ACJ36625807	Connector,Assembly
249R	4932JJ2009B	4932JJ2009B	4932JJ2009B	4932JJ2009B	4932JJ2009B	Connector,Tilt
249S	ACJ36695103	ACJ36695103	ACJ36695103	ACJ36695103	ACJ36695103	Connector,Assembly
250A	MAK39123901	MAK39123901	MAK39123901	MAK39123901	MAK39123901	Bar
250B	4403JA3005A	4403JA3005A	4403JA3005A	4403JA3005A	4403JA3005A	Connector,Assembly
262C	4350JA3005B	4350JA3005B	4350JA3005B	4350JA3005B	4350JA3005B	Ring
281D	3550JA2267B	3550JA2267B	3550JA2267B	3550JA2267B	3550JA2267B	Cover,Hinge
281E	3550JA2267A	3550JA2267A	3550JA2267A	3550JA2267A	3550JA2267A	Cover,Hinge
281F	3550JA2264A	3550JA2264A	3550JA2264A	3550JA2264A	3550JA2264A	Cover,Hinge
281G	MCQ42969201	MCQ42969201	MCQ42969201	MCQ42969201	MCQ42969201	Damper,Pipe
312B	MCK42644301	MCK42644301	MCK42644301	MCK42644301	MCK42644301	Cover,Front
615A	MJM58427302	MJM58427302	MJM58427302	MJM58427302	MJM58427302	Tank,Water
619K	MJX57597701	MJX57597701	MJX57597701	MJX57597701	MJX57597701	Valve,Water
620C	5210JA3030P	5210JA3030P	5210JA3030P	5210JA3030P	5210JA3030P	Tube,Plastic

CAUTION: Use the part number to order the part, not the pos ition number.

DOOR PARTS

CAUTION: Use the part number to order the part, not the position number.

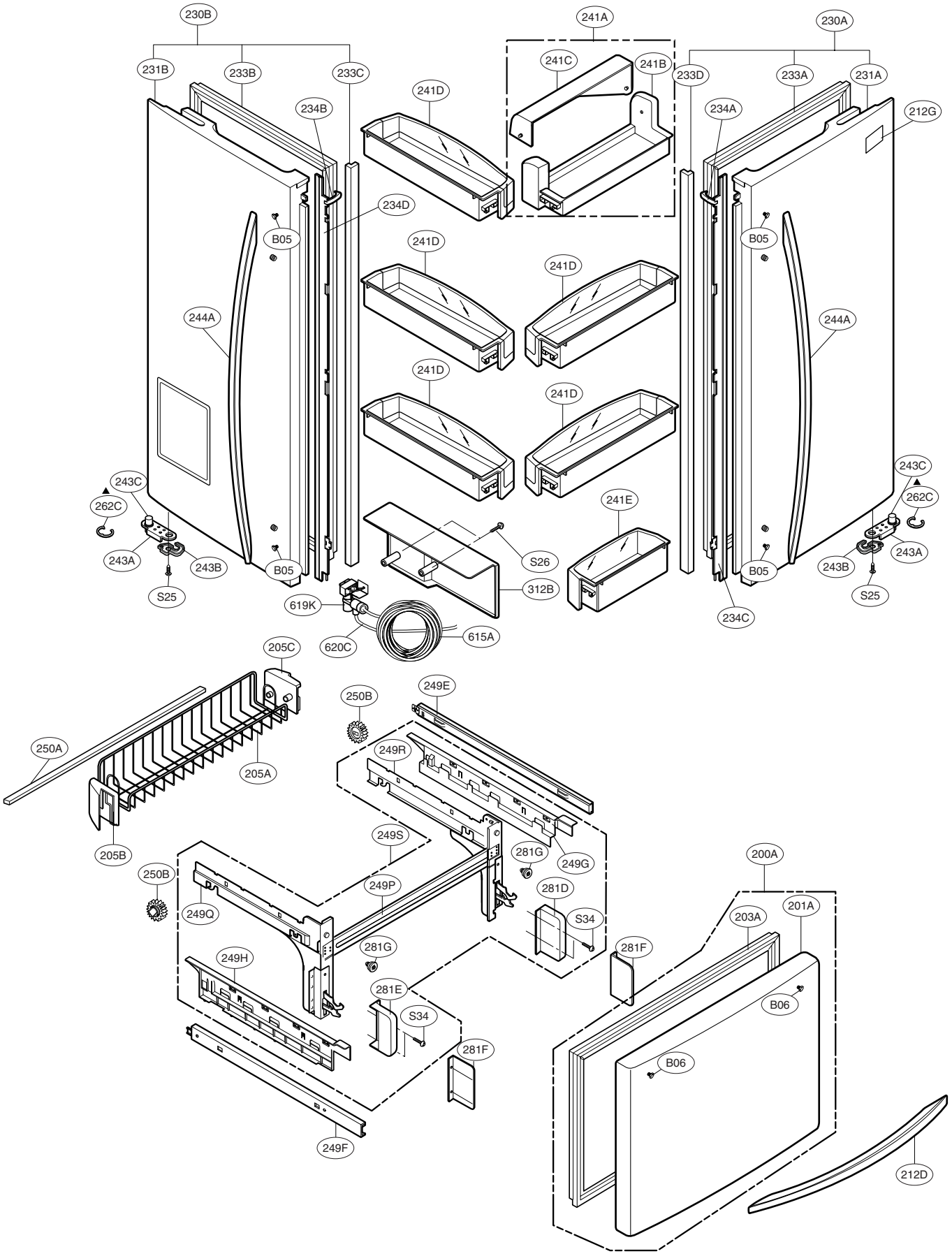

DISPENSER PARTS

CAUTION: Use the part number to order the part, not the pos ition number.

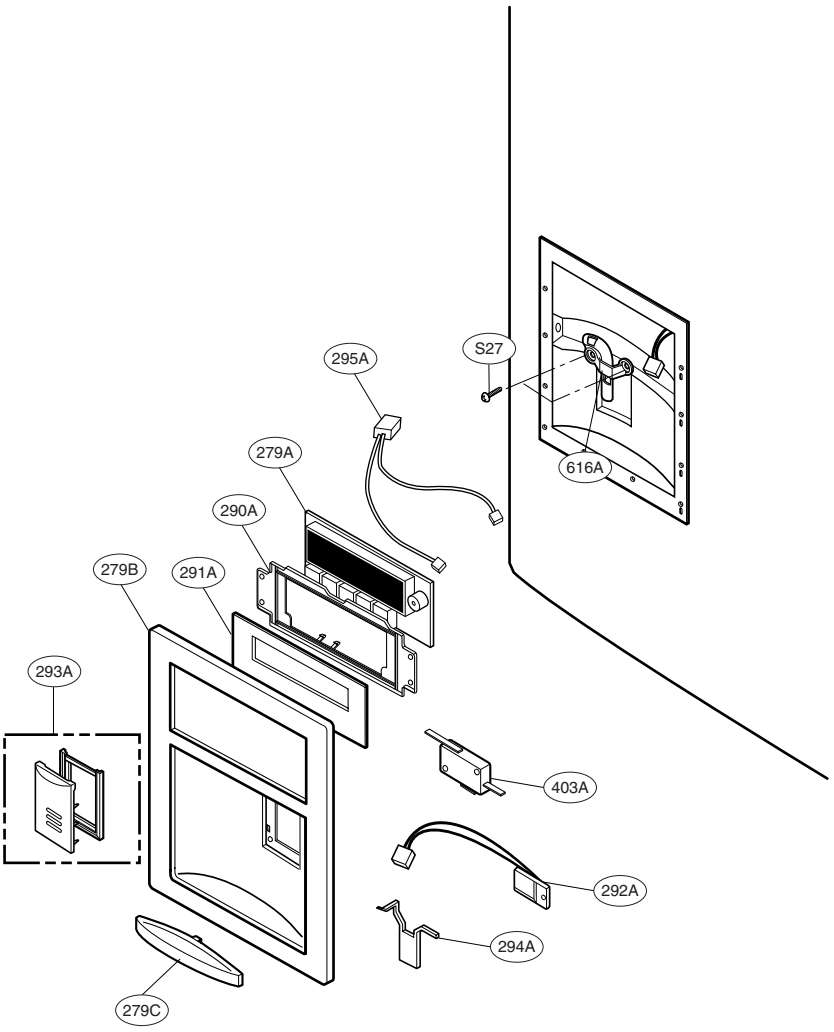

LOC No.	785*3	785*6	785*2	785*9	785*4	Des crption
279A	6871JB1439B	6871JB1439B	6871JB1439B	6871JB1439B	6871JB1439B	PCB As sembly,Display
279B	3550JA1492A	3550JA1492A	3550JA1492B	3550JA1492B	3550JA1492B	Cover,Dispenser
279C	3806J J 2053A	3806J J 2053A	3806J J 2053E	3806J J 2053E	3806J J 2053E	Decor,Drain
290A	3550JA2280A	3550JA2280A	3550JA2280A	3550JA2280A	3550JA2280A	Cover,PCB
291A	4890JD1110B	4890JD1110B	4890JD1110B	4890JD1110B	4890JD1110B	Decor,Glas s Door
292A	6871JB2074B	6871JB2074B	6871JB2074B	6871JB2074B	6871JB2074B	PCB As sembly,S ub
293A	5021JA3020A	5021JA3020A	5021JA3020B	5021JA3020B	5021JA3020B	Button As sembly
294A	4510JA2028A	4510JA2028A	4510JA2028A	4510JA2028A	4510JA2028A	Lever,Dispenser
295A	6877JB2181A	6877JB2181A	6877JB2181A	6877JB2181A	6877JB2181A	Drawing,As sembly
403A	6600JB3001C	6600JB3001C	6600JB3001C	6600JB3001C	6600JB3001C	Switch,Micro
616A	5210JA2012A	5210JA2012A	5210JA2012F	5210JA2012F	5210JA2012F	Tube,Inject
S 27	4J 00415D	4J 00415D	4J 00415D	4J 00415D	4J 00415D	S crew,Cus tomized

*'You Can Count on me . . .
to Work Safely.'*