This Owner's Manual is provided and hosted by Appliance Factory Parts.

Appliance Factory Parts
Experts in BBQ, Humidifier, & Appliance Parts
1-800-955-7075

LG 79302
Owner's Manual

Shop genuine replacement parts for LG 79302

Find Your LG Refrigerator Parts - Select From 834 Models

-------- Manual continues below --------

Kenmore®

TOP FREEZER REFRIGERATOR

REFRIGERATOR
SERVICE MANUAL

CAUTION
BEFORE SERVICING THE UNIT,
READ THE SAFETY PRECAUTIONS IN THIS MANUAL.

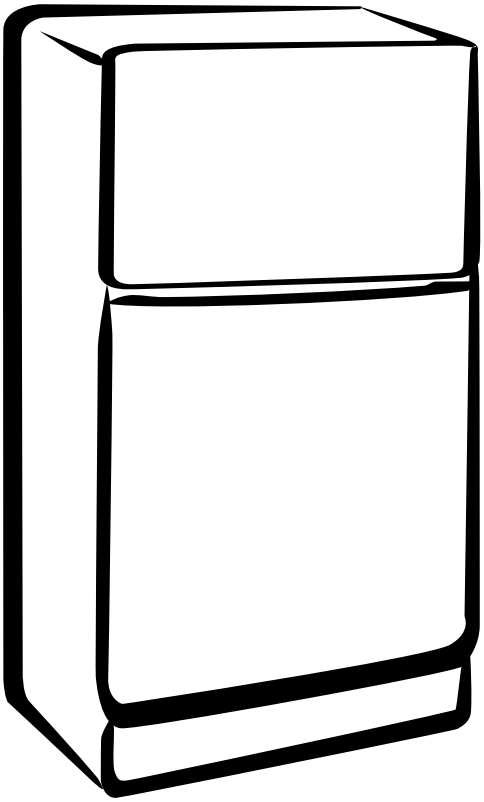

MODELS:
795.79012.900
795.79013.900
795.79014.900
795.79019.900
795.79302.900
795.79303.900
795.79304.900
795.79309.900

Sears, Roebuck and Co., Hoffman Estates, IL60179 U.S.A.

www.sears.com

CONTENTS

SAFETY PRECAUTIONS 2
1. SPECIFICATIONS 3
2. PARTS IDENTIFICATION 5
3. DISASSEMBLY 6
3.1 Door 6
3.2 Door switch 6
3.3 Fan and fan motor 7
3.4 Defrost control assembly 7
3.5 Lamp 7
3.6 Control box-refrigerator 7
4. COMPRESSOR ELECTRICAL 8
4.1 Compressor 8
4.2 PTC-Starter/ COMBO 8
4.3 OLP (overload protector) 9
5. CIRCUIT DIAGRAM 10
6. TROUBLESHOOTING 11
6.1 Compressor and electric components 11
6.2 PTC/ COMBO and OLP 12
6.3 Other electrical components 13
6.4 Service diagnosis chart 14
6.5 Refrigeration cycle 15
7. OPERATION PRINCIPLE AND REPAIR METHOD OF ICEMAKER 16
7.1 Operation principle 16
7.2 Ice maker functions 17
8. DESCRIPTION OF FUNCTION & CIRCUIT OF MICOM 18
8.1 Function 18
8.2 PCB function 21
8.3 Resistance specification of sensor 22
9. EXPLODED VIEW AND REPLACEMENT PART LIST 27

SAFETY PRECAUTIONS

Please read the following instructions before servicing your refrigerator.

1. Check the refrigerator for electrical faults.
2. To prevent electric shock, unplug before servicing.
3. Always check line voltage and amperage.
4. Use standard electrical components or cause your skin to freeze and stick to the surfaces inside the freezer.
5. Don´t touch metal poducts in the freezer with wet hands. This may cause frostbite.
6. Prevent water from spiling onto electric elements or the machine parts.
7. Close the top door before opening the bottom door. Otherwise, you might hit your head when you stand up.
8. When tilting the refrigerator, remove any materials on the refrigerator, especially the glass shelves and stored food.
9. When servicing the evaporator, wear cotton gloves. This is to prevent injuries from the sharp evaporator fins.
10. Service on the refrigerator should be performed by a qualified technician. Sealed system repair must be perdormed by a CFC certified technician.

1. SPECIFICATIONS

1-1 DISCONNECT POWER CORD BEFORE SERVICING
IMPORTANT RECONNECT ALL GROUNDING DEVICES.

All parts of this appliance capable of conducting electrical current are grounded. If grounding wires, screws, straps, clips, nuts or washers used to complete a path to ground are removed for service, they must be returned to their original position and properly fastened.

1-2 IMPORTANT NOTICE

This information is intended for use by individuals possessing adequate backgrounds of electrical, electronic and mechanical experience. Any attempt to repair a major appliance may result in personal injury and property damage. The manufacturer or seller cannot be responsible for the interpretation of this information, nor can it assume any liability in connection with its use.

1-3 ELECTRICAL SPECIFICATIONS

Temperature Control (Position: MID) ..... -6°F to +8°F
Defrost Control ..... Automatic
Defrost Thermostat ..... 50°F
Electrical Rating : 115VAC, 60Hz ..... 1-5 A
Maximum Current Leakage 0.5mA
Maximum Ground Path Resistance ..... 0.14 Ohms
Energy Consumption ..... 19 cu.ft. 394 kWh/yr (Energy Star)
22 cu.ft. 422 kWh/yr (Energy Star)

1-4 NO LOAD PERFORMANCE

Control Position: MID/MID

And Ambient of:	70°F	90°F
Fresh Food, °F	33°F to 41°F	33°F to 41°F
Frozen Food, °F	-4°F to +4°F	-4°F to +4°F
Percent Running Time	25%-35%	45%-60%

1-5 REFRIGERATION SYSTEM

Minimum Compressor Capacity Vacuum ..... 21 in
Minimum Equalized Pressure
@70°F 49PSIG
@90°F 56PSIG
Refrigerant R134a ..... 5.47 oz
Compressor ..... 700 BTU/hr

1-6 INSTALLATION

Clearance must be provided for air circulation.

AT TOP ..... 2 in
AT SIDES ..... 2 in
AT REAR ..... 2 in

PERFORMANCE DATA (NORMAL OPERATING CONDITIONS)			
AMB	WATTS	SYSTEM PRESSURE (PSIG)	
		HIGH SIDE	LOW SIDE
70°F	98 (+10 / -10)	98 (+5 / -3)	(-5) to (-2)
90°F	98 (+10 / -10)	132 (+3 / -3)	(-4) to 1
110°F	103 (+5 / -5)	180 (+5 / -5)	(-2) to 3

1-7 REPLACEMENT PARTS

	19 cuft	22 cuft
Relay (PTC)	6748C-0004D	6748C-0004D
Overload Protector (OLP)	6750C-0005P	6750C-0005P
Defrost Thermostat	4781JK2001A	4781JK2001A
Defrost Heater	5300JK1003D	5300JK1003J
Evaporator Fan Motor	4681JK1004A	4681JK1004A
Capacitor	0CZZJB2012J	0CZZJB2012J
Compressor (Hi-side)	TCA33414101	TCA33414101
Evaporator (Lo-side)	5421JJ0003A	5421JJ0002A
Condenser	5403JJ1008A	5403JJ1008A
Dryer	5851JJ2002F	5851JJ2002F
Condenser Fan Motor	4681JB1029J	4681JB1029J
Temperature Control	EBR59400501	EBR59400501
Main Control	EBR41531307	EBR41531307

1-8 AIR FLOW

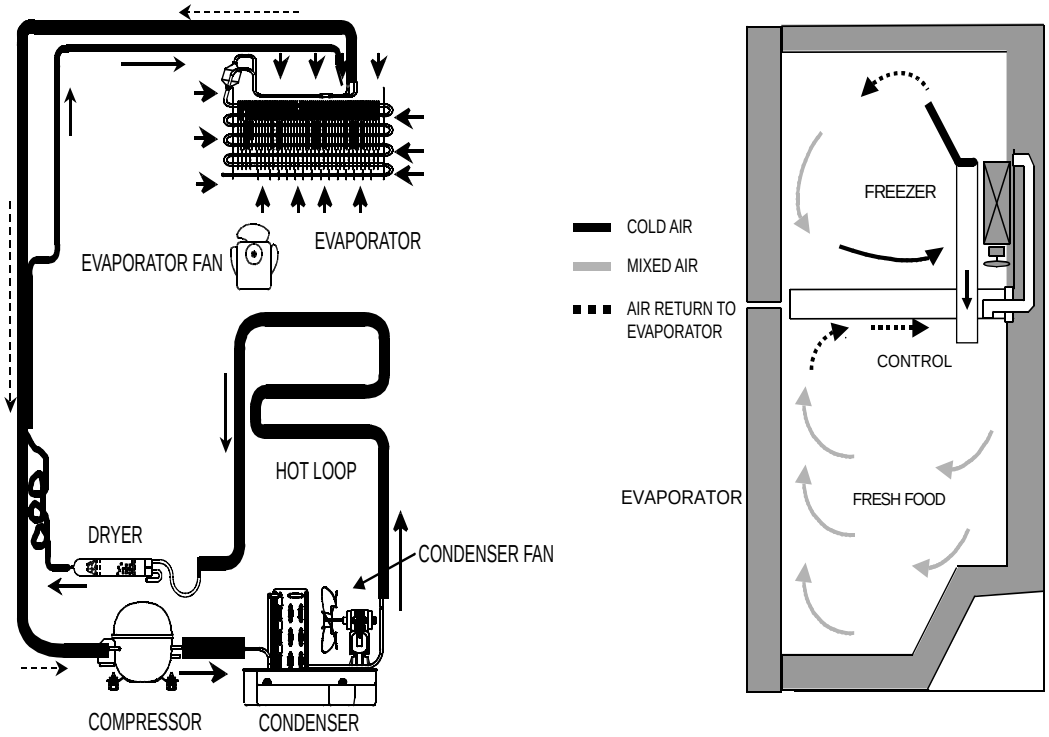

2. PARTS IDENTIFICATION

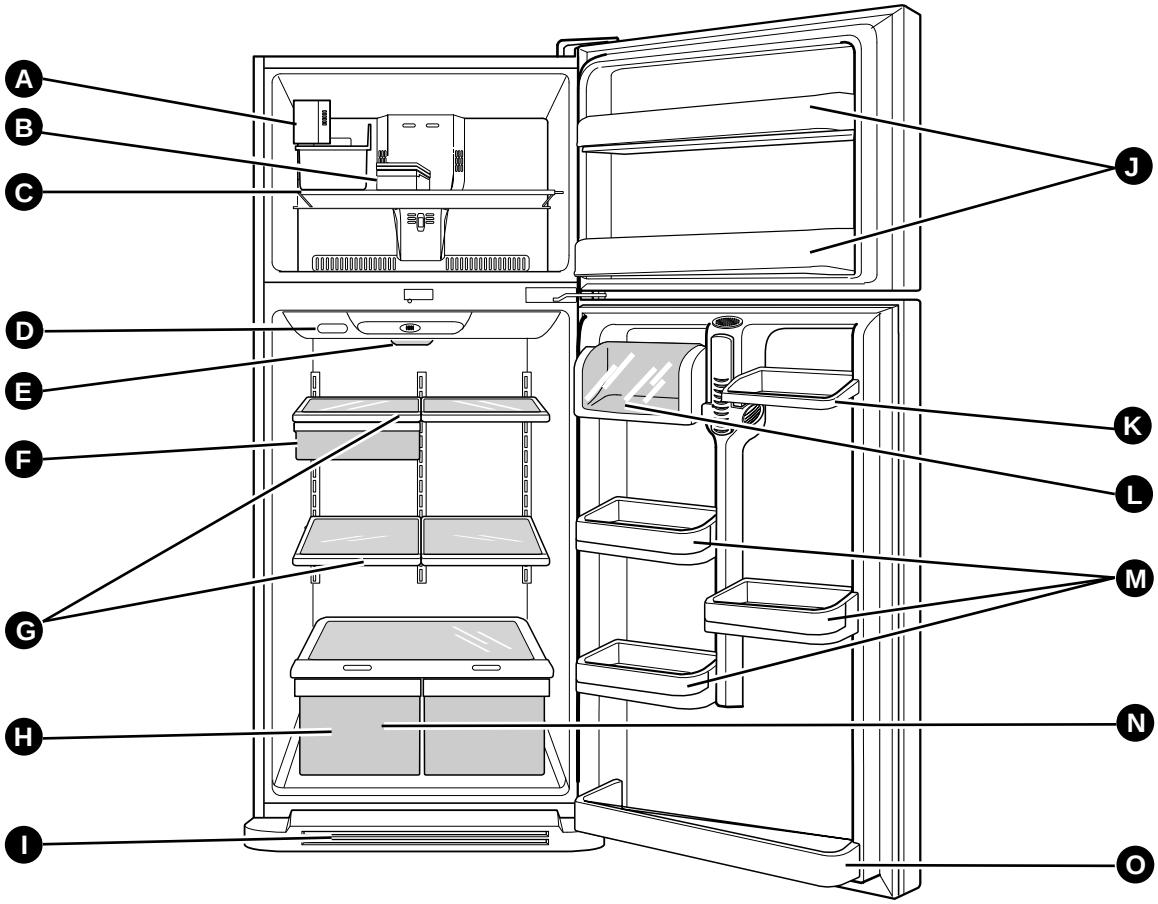

Use this section to become more familiar with the parts and features. Page references are included for your convenience.

NOTE: This guide covers several different models. The refrigerator you have purchased may have some or all of the items listed below. The locations of the features shown below may not match your model.

- **A** CustomCube Ice maker
- **B** Ice Bin
- **C** Freezer Shelf
- **D** Digital Sensor Control
- **E** Refrigerator Light
- **F** Snack Pan
- **G** Shelves
- **H** Crisper
  Keeps fruits and vegetables fresh and crisp
- **I** Base Grille
- **J** Freezer Door Bin
- **K** Dairy Corner
- **L** Can Dispenser
- **M** Door Bin
- **N** Refrigerator Door Rack
- **O** Vitabox (Inside)*

*On some models

3. DISASSEMBLY

3-1 DOOR

Freezer Door

1. Remove the hinge cover by pulling it upwards.
2. Loosen hexagonal bolts attaching the upper hinge to the body and lift the freezer door.

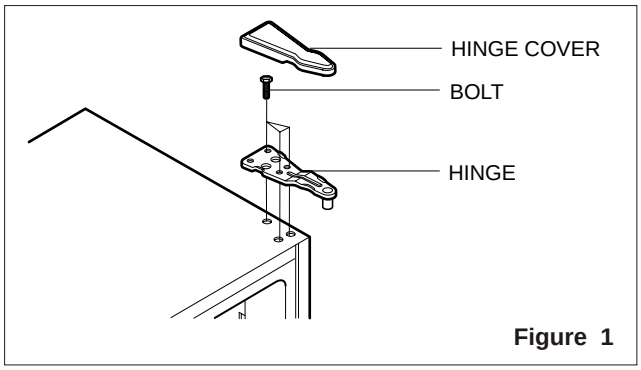

Figure 1

3. Pull out the door gasket to remove from the door foam assembly.

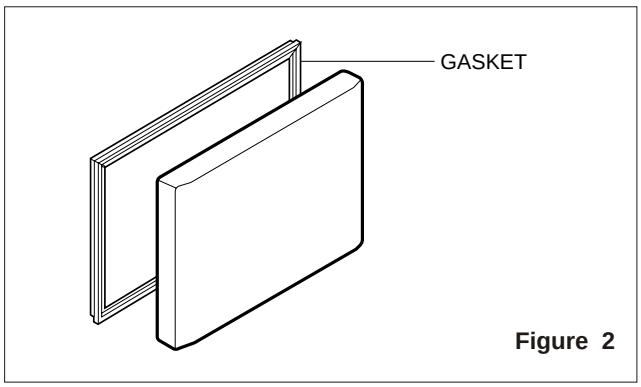

Figure 2

Refrigerator Door

1. Loosen hexagonal bolts attaching the lower hinge to the body to remove the refrigerator door only.

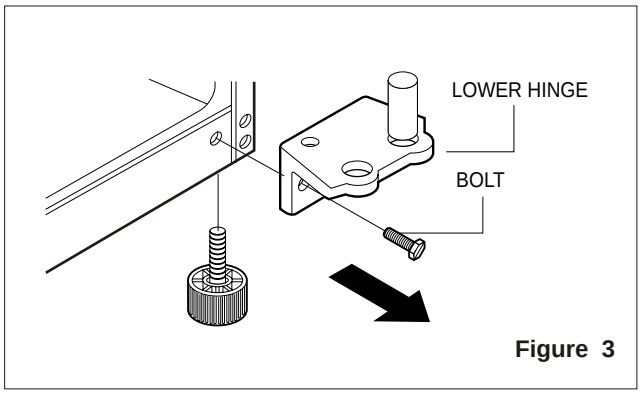

Figure 3

2. Pull out the door gasket to remove from the door foam assembly.

3-2 DOOR SWITCH

1. To remove the door switch, pry it out with a slotted-type driver, as shown in (Figure 4).
2. Disconnect the lead wire from the switch.

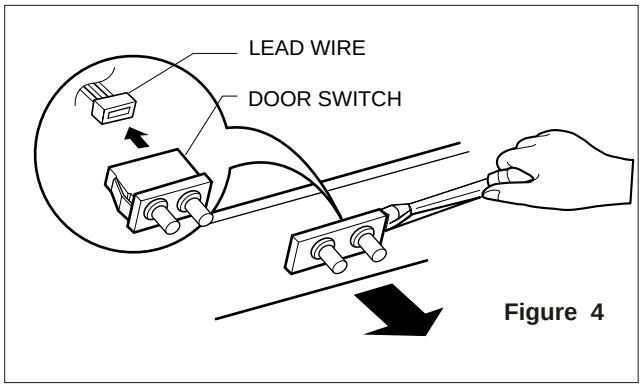

Figure 4

3-3 FAN AND FAN MOTOR

1. Remove the freezer shelf. (If your refrigerator has an icemaker, unplug and remove the icemaker first).
2. Remove the screw of the cover grille fan
3. Remove the grille by pulling it out and by loosening a screw.
4. Remove the Fan Motor assembly by loosening 4 screws and disassemble the shroud.
5. Pull out the fan and separate the Fan Motor and Bracket.

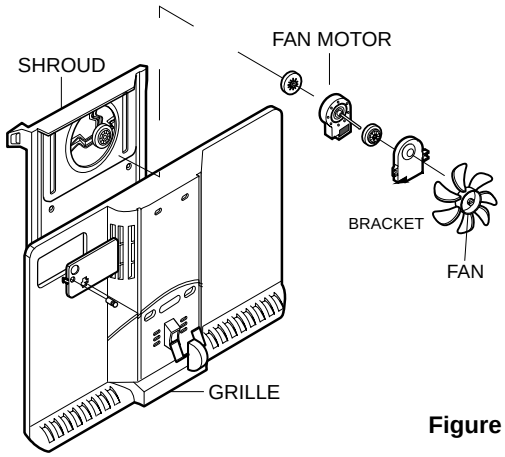

Figure 5

3-4 DEFROST CONTROL ASSEMBLY

Defrost Control assembly consists of Defrost Sensor and FUSE–M.

Defrost sensor functions to defrost automatically. It is attached to metal side of the Evaporator and senses Temperature. At the temperature of 162°F(72°C), it stops the emission of heat from the Heater.

Fuse-M is a safety device for preventing over-heating of the Heater when defrosting.

1. Pull out the grille assembly. (Figure 6)
2. Separate the connector of the Defrost Control assembly and replace the Defrost Control assembly after cutting the Tie Wrap. (Figure 7)

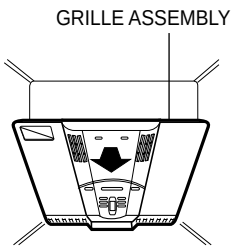

Figure 6

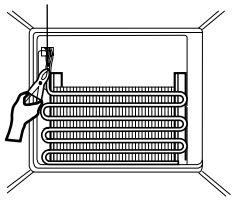

Figure 7

3-5 LAMP

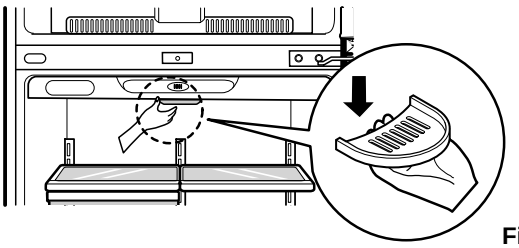
Figure 8

3-5-1 Refrigerator Compartment Lamp

1. Unplug the power cord from the outlet.
2. Remove refrigerator shelves.
3. Release the hooks on both ends of the lamp shield and pull the shield downward to remove it.
4. Turn the lamp counterclockwise.
5. Assemble in reverse order of disassembly. Replacement bulb must be the same specification as the original (Max. 40 W-1EA).

3-6 CONTROL BOX-REFRIGERATOR

1. First, remove all shelves in the refrigerator. Then remove the Refrigerator Control Box by loosening 2 screws.

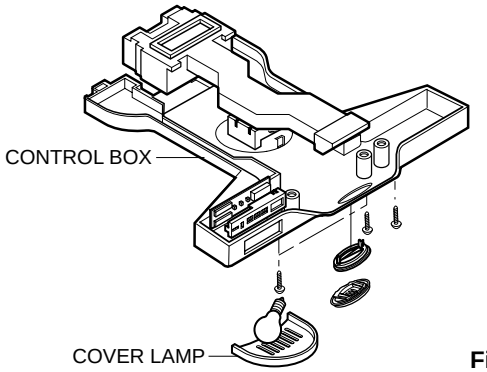

Figure 9

2. Remove the Refrigerator Control Box by pulling it downward.
3. Disconnect the lead wire on the right position and separate the lamp sockets.

4. COMPRESSOR ELECTRICAL

4-1 COMPRESSOR

4-1-1 Role

The compressor intakes low temperature and low pressure gas from the evaporator of the refrigerator and compresses this gas to high temperature and high pressure gas. It then delivers the gas to the condenser.

4-1-2 Composition

The compressor includes overload protection. The PTC starter and OLP (overload protector) are attached to the outside of the compressor. Since the compressor is manufactured to tolerances of 1 micron and is hermetically sealed in a dust and moisture-free environment, use extreme caution when repairing it.

4-1-3 Note for Usage

(1) Be careful not to allow over-current.
(2) If compressor is dropped or handled carelessly, poor operation and noise may result.
(3) Use proper electric components appropriate to the particular compressor in your product.
(4) Keep compressor dry.
If the compressor gets wet (in the rain or a damp environment) and rust forms in the pin of the Hermetic Terminal, poor operation and contact may result. If the hermetic connector rusts out or fails, refrigerant and oil will be expelled into the contact area, probably resulting in smoke and fire.
(5) When replacing the compressor, be careful that dust, humidity, and soldering flux don´t contaminate the inside of the compressor. Contamination in the cylinder may cause noise, improper operation or even cause it to lock up.

4-2 PTC-STARTER/ COMBO

4-2-1 Composition of PTC- Starter

(1) PTC (Positive Temperature Coefficient) is a no-contact semiconductor starting device which uses ceramic material consisting of $BaTiO_3$.
(2) The higher the temperature is, the higher the resistance value. These features are used as a starting device for the motor.

4-2-2 Role of PTC-Starter

(1) The PTC is attached to the Sealed Compressor and is used for starting the motor.
(2) The compressor is a single-phase induction motor. During the starting operation, the PTC allows current flow to both the start winding and main winding.

4-2-3 Combo TSD

TSD (Time Starting Device) is a new electronic starting system for high efficiency compressors due to the following characteristics:
(1) Combo concept-overload protector, electronic board and cover in a single casing.
(2) Fully electronic concept.
(3) Full integration of starting and protection devices.
(4) Free from mechanical and electromagnetic noises.

4-2-4 Role of Combo TSD

(1) The combo is attached to the sealed compressor and is used for the operation and protect the motor.
(2) The compressor is a single phase induction motor. During the starting and operation, the combo allows current flow to both the start and main winding.

4-2-5 PTC/Combo - Applied Circuit Diagram Starting Method for the Motor

COMPRESSOR ACCESORIES

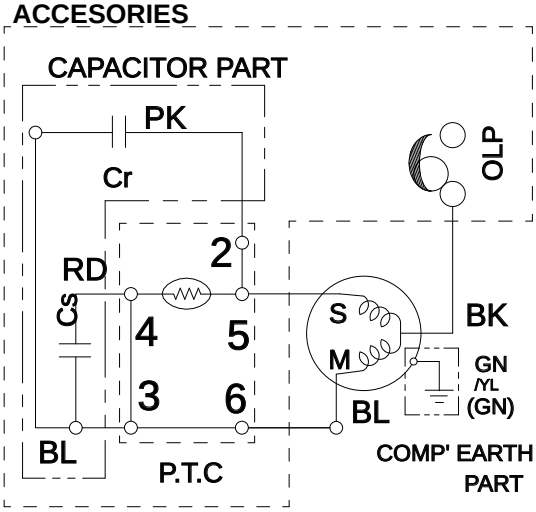

PTC DIAGRAM

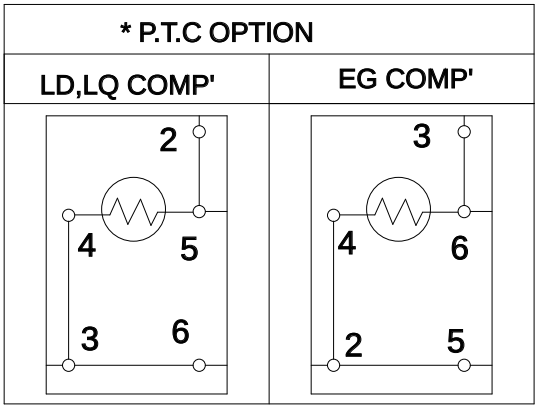

COMBO KIT DIAGRAM

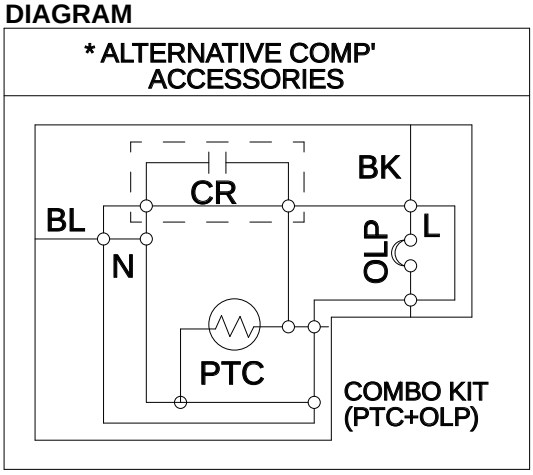

4-2-6 Motor Resarting and PTC/ Combo Cooling

(1) It requires approximately 5 minutes for the pressure to equalize before the compressor can restart.
(2) The PTC/Combo device generates hea during operation. Therefore, it must be allowed to cool before the compressor can restart.

4-2-7 Relation of PTC-Starter / Combo and OLP

(1) If the compressor attempts to restart before the PTC/Combo device is cooled, the PTC/Combo device will allow current to flow only to the main winding.
(2) The OLP will open because of the over current condition. Thissame process will continue (3 to 5 times) when the compressor attempts to restart until the PTC/Combo device has cooled. The corret OLP must be properly attached to prevent damage to the compressor.
Parts may appear physically identical but could have different electrical ratings. Replace parts by part number and model number. Using an incorrect part could result in damage to the product, fire, injury, or possibly death.

4-2-8 Note for using the PTC-Starter / Combo

(1) Be careful not to allow over-voltage and over-current
(2) Do not drop or handle carelessly.
(3) Keep away from any liquid.
If liquid such as oil or water enters the PTC/Combo, PTC/Combo materials may fail due to breakdown of their insulating capabilities.
(4) If the exterior of the PTC/Combo is damaged, the resistance value may be altered. This can cause damage to the compressor and result in a no-start or hard-to-start condition.
(5) Always use the PTC/Combo designed for the compressor and make sure it is properly attached to the compressor. Parts may appear physically identical but could have different electrical ratings. Replace parts by part number and model number. Using an incorrect part could result in damage to the product, fire, injury, or possibly death.

4-3 OLP (OVERLOAD PROTECTOR)

4-3-1 Definition of OLP

(1) OLP (OVERLOAD PROTECTOR) is attached to the compressor and protects the motor by opening the circuit to the motor if the temperature rises activating the bimetal spring in the OLP.
(2) When high current flows to the compressor motor, the bimetal wors by heating the heater inside the OLP, and the OLP protects the motor by cutting off the current flowing to the compressor motor.

4-3-2 Role of the OLP

(1) The OLP is attached to the sealed compressor used for the refrigerator. It prevents the motor coil from being started in the compressor.}
(2) For normal operation of the OLP, do not turn the adjust screw of the OLP in anyway.

(OVERLOAD PROTECTOR cross section)

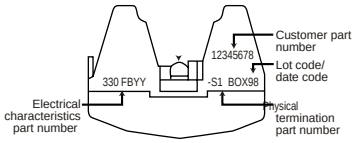

Figure 18

5. CIRCUIT DIAGRAM

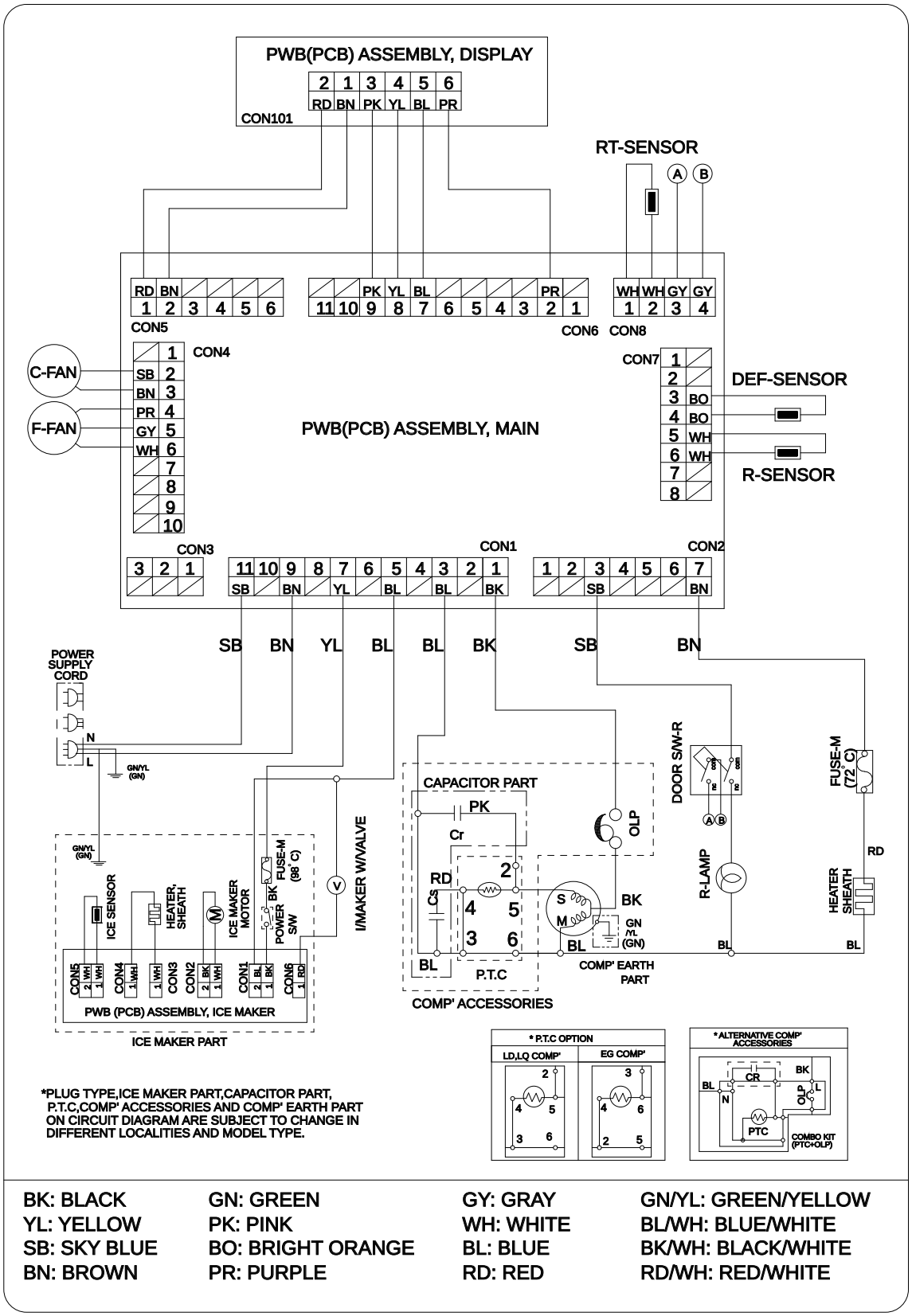

BK: BLACK	GN: GREEN	GY: GRAY	GN/YL: GREEN/YELLOW
YL: YELLOW	PK: PINK	WH: WHITE	BL/WH: BLUE/WHITE
SB: SKY BLUE	BO: BRIGHT ORANGE	BL: BLUE	BK/WH: BLACK/WHITE
BN: BROWN	PR: PURPLE	RD: RED	RD/WH: RED/WHITE

6. TROUBLESHOOTING

6-1 COMPRESSOR AND ELECTRIC COMPONENTS

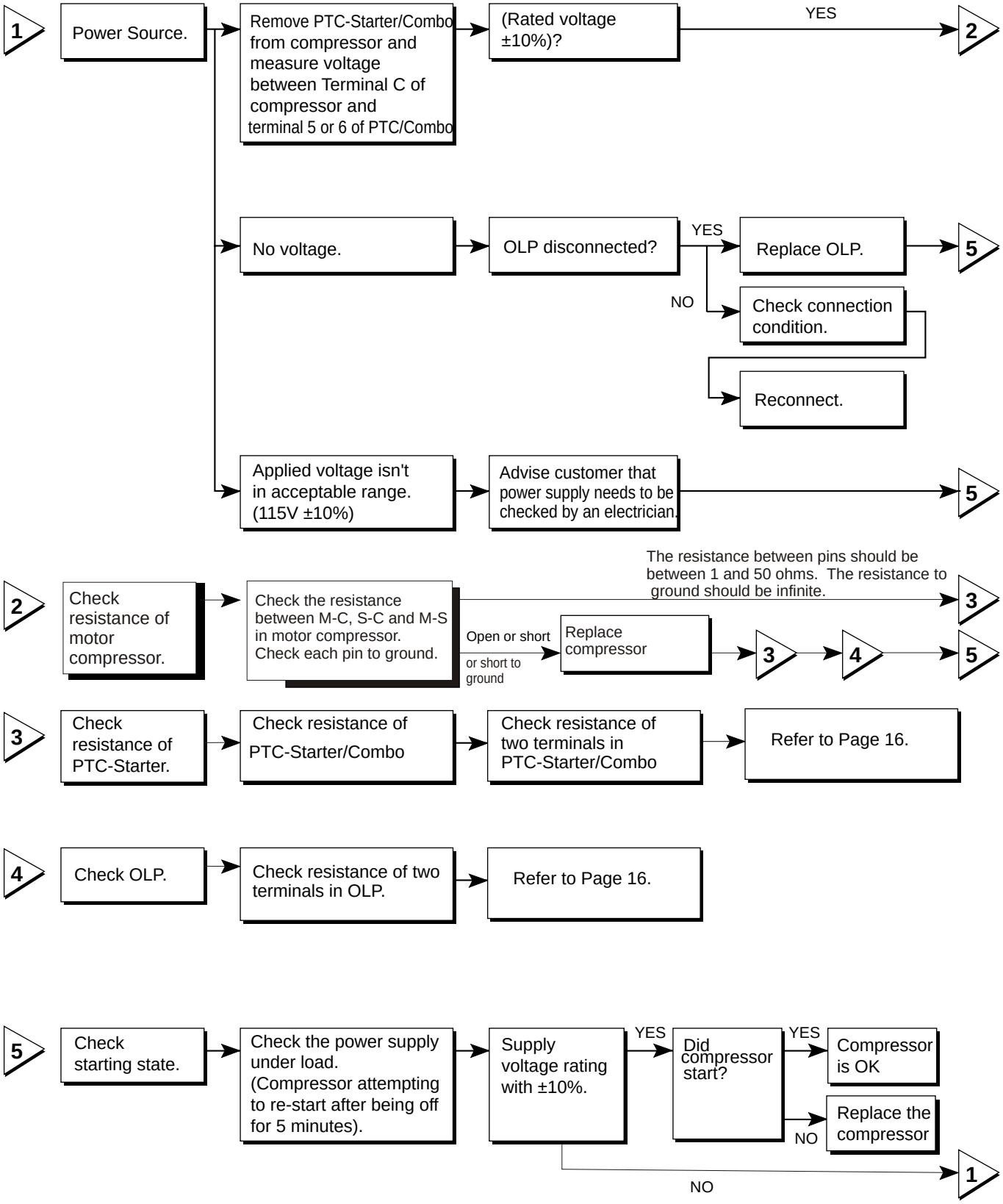

6-2 PTC / COMBO AND OLP

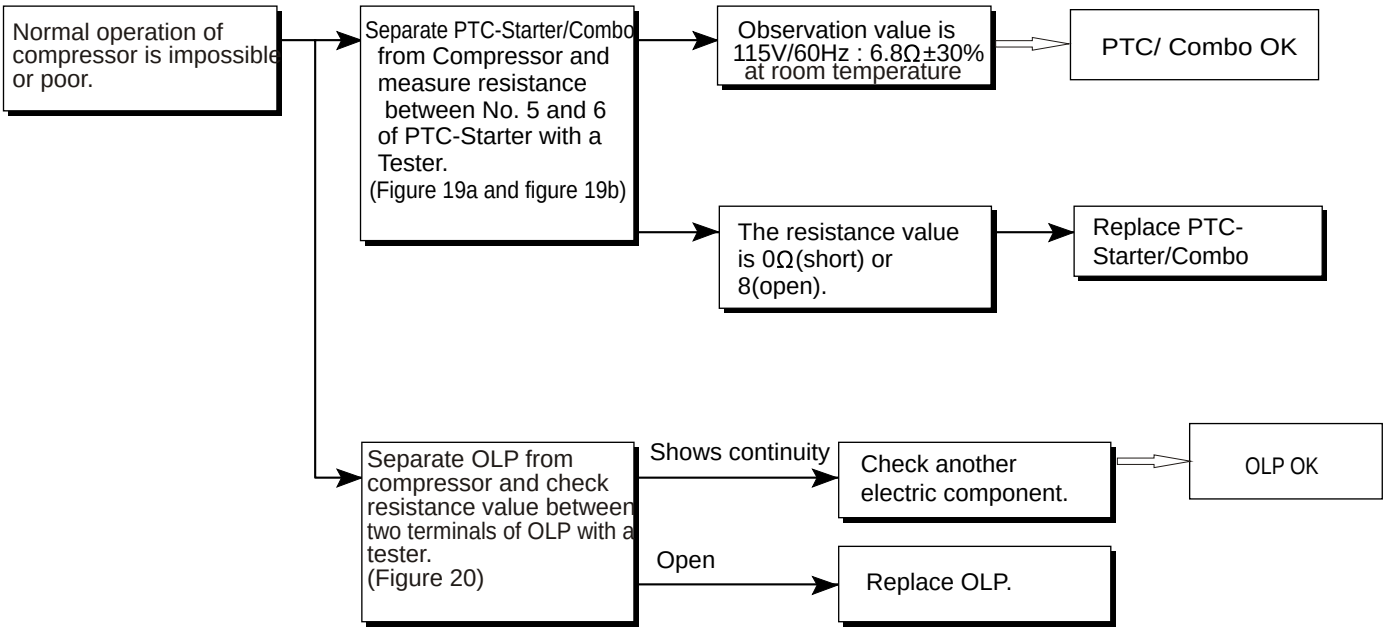

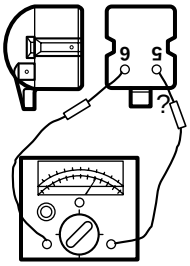

Figure 19a

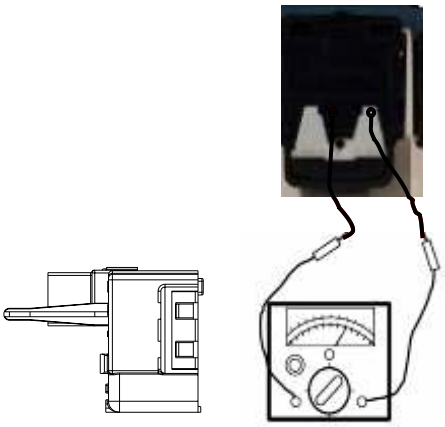

Figure 19b

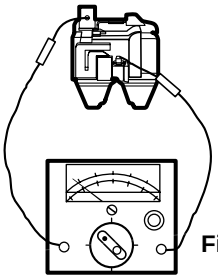

Figure 20

6-3 OTHER ELECTRIC COMPONENTS

• Not cooling at all

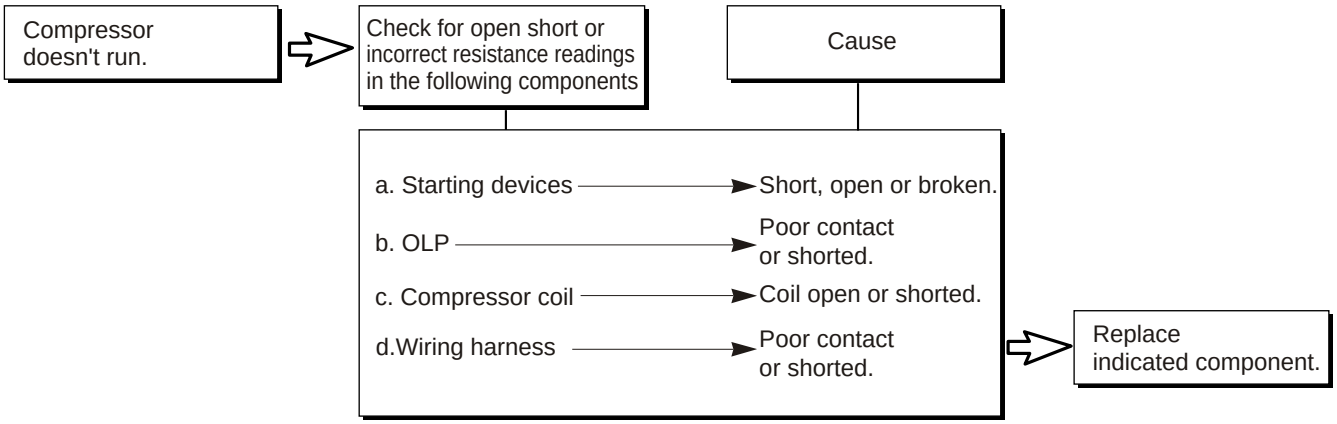

• Poor cooling performance

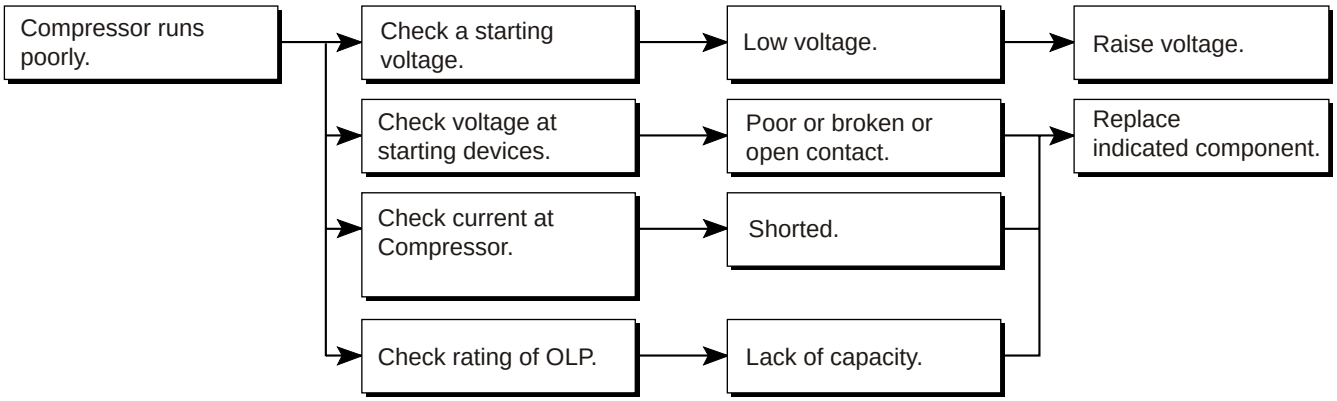

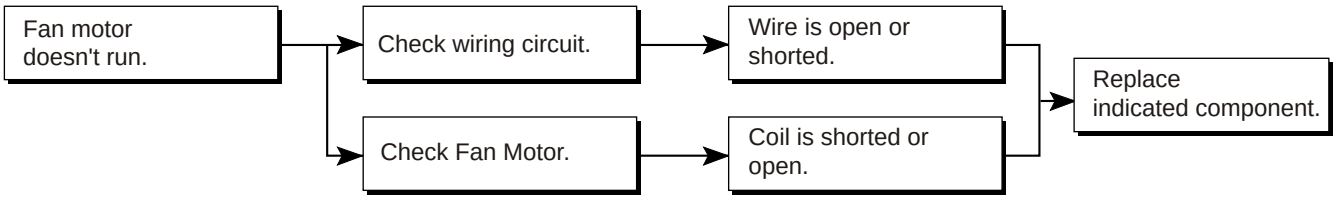

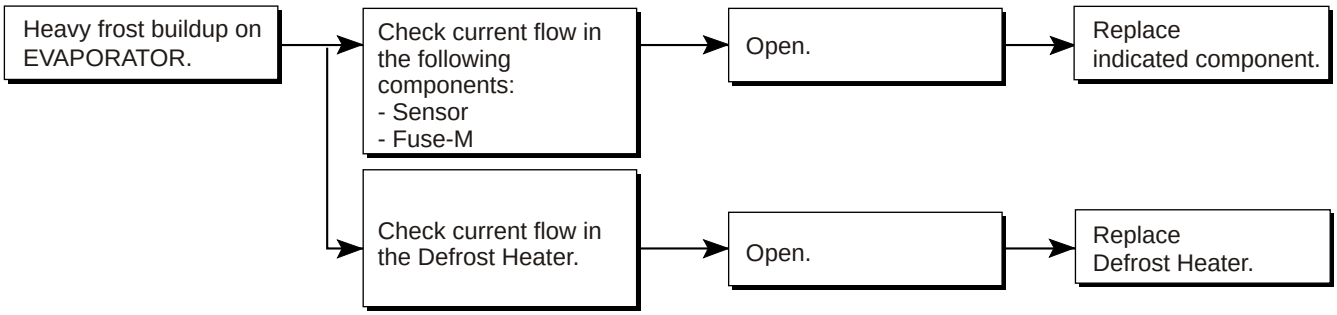

6-4 SERVICE DIAGNOSIS CHART

COMPLAINT	SYMPTOM	POSSIBLE CAUSES	SOLUTION
Electronic Display not operating correctly	1. No Display at all	1. Supply voltage not within specifications 2. Open in wiring harness from PWB board 3. Open in door monitor switch circuit	1. Check supply voltage to refrigerator 2. Chack wiring and connectors to PWB board 3. Check door monitor circuit
	2. Partial or abnormal display	1. Supply voltage not within specifications 2. Open wiring harness from PWB board	1. Check supply voltage to refrigerator 2. Chack wiring and connectors to PWB board
Not cooling	1. Display on but compressor not operating	1. Compressor not operating 2. Open in compressor circuit	1. Check for compressor operation by using the test key on main circuit board. 2. Check for open on OLP, PTC, compressor, wiring, etc.
Not cold enough	1. Display on compressor is operating	1. Condenser fan motor not operating 2. Condenser coils blocked 3. Evaporator fan motor not operating 4. Internal air flow blocked 5. Sensor not operating properly 6. Door not sealing 7. Evaporator frosted up 8. Sealed system related problem	1. Check condenser fan motor and wiring circuit 2. Check air flow across condenser 3. Check evaporator fan motor and wiring circuit 4. Check air ducts 5. Check refrigerator and freezer sensors 6. Check for proper door seal 7. Check defrost circuit components
Not defrosting	1. Freezer has to much frost	1. Open in defrost circuit 2. Defrost sensor not operating correctly 3. Defrost drain clogged	1. Check defrost heater and circuit using Test Key 2. Check sensor 3. Check drain

6-5 REFRIGERATING CYCLE

• Troubleshooting Chart

CAUSE		STATE OF THE UNIT	STATE OF THE EVAPORATOR	TEMPERATURE OF THE COMPRESSOR	REMARKS
LEAKAGE	PARTIAL LEAKAGE	Freezer compartment and Refrigerator don't cool normally.	Low flowing sound of Refrigerant is heard and frost forms in inlet only.	A little higher than ambient temperature.	• Refrigerant level is low due to a leak. • Normal cooling is possible by restoring the normal amount of • Refrigerant and repairing the leak.
	COMPLETE LEAKAGE	Freezer compartment and Refrigerator don't cool normally.	Flowing sound of refrigerant is not heard and frost isn't formed.	Equal to ambient temperature.	• No discharging of Refrigerant. • Normal cooling is possible by restoring the normal amount of refrigerant and repairing the leak.
RESTRICTEDBYDUST	PARTIAL RESTRICTION	Freezer compartment and Refrigerator don't cool normally.	Flowing sound of refrigerant is heard and frost forms in inlet only.	A little higher than ambient temperature.	• Normal discharging of the refrigerant. • The capillary tube is faulty.
	WHOLE RESTRICTION	Freezer compartment and Refrigerator don't cool.	Flowing sound of refrigerant is not heard and frost isn't formed.	Equal to ambient temperature.	• Normal discharging of the refrigerant.
MOISTURE RESTRICTION		Cooling operation stops periodically.	Flowing sound of refrigerant is not heard and frost melts.	Lower than ambient temperature.	• Cooling operation restarts when heating the inlet of the capillary tube.
DEFECTIVE COMPRESSION	COMP-RESSION	Freezer and Refrigerator don't cool.	Low flowing sound of refrigerant is heard and frost forms in inlet only.	A little higher ambient temperature.	• Low pressure at high side of compressor due to low refrigerant level.
	NO COMP-RESSION	No compressing operation.	Flowing sound of refrigerant is not heard and there is no frost.	Equal to ambient temperature.	• No pressure in the high pressure part of the compressor.

Leakage Detection

Check sealed system for leak.

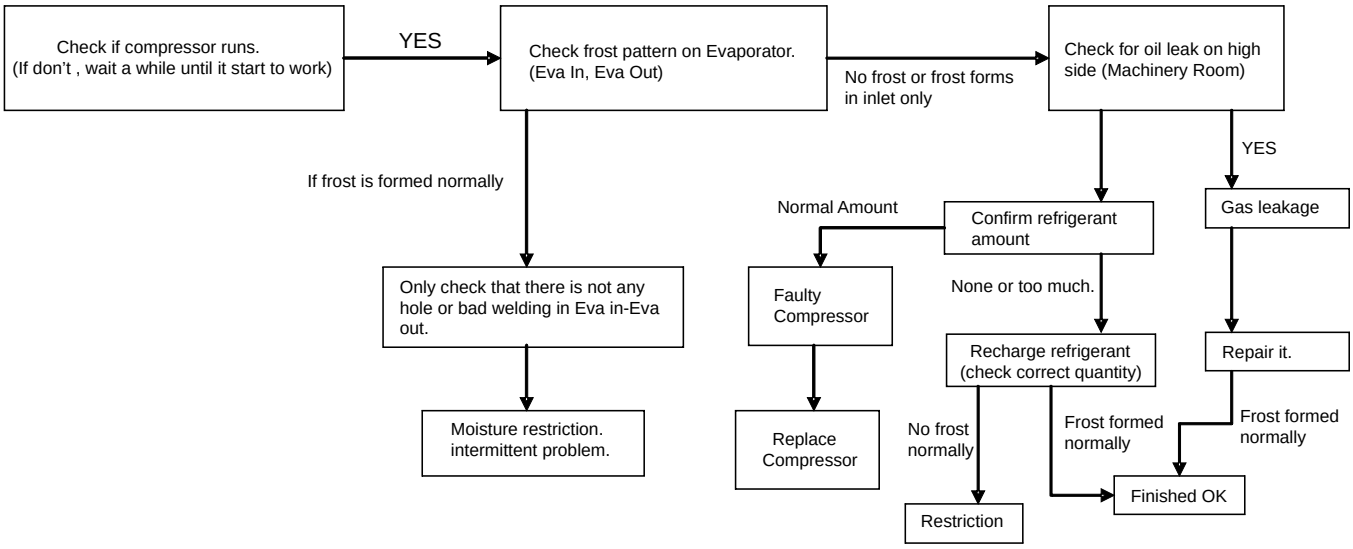

7. OPERATION PRINCIPLE AND REPAIR METHOD OF ICEMAKER

7-1 OPERATION PRINCIPLE

7-1-1 Operation Principle of Icemaker

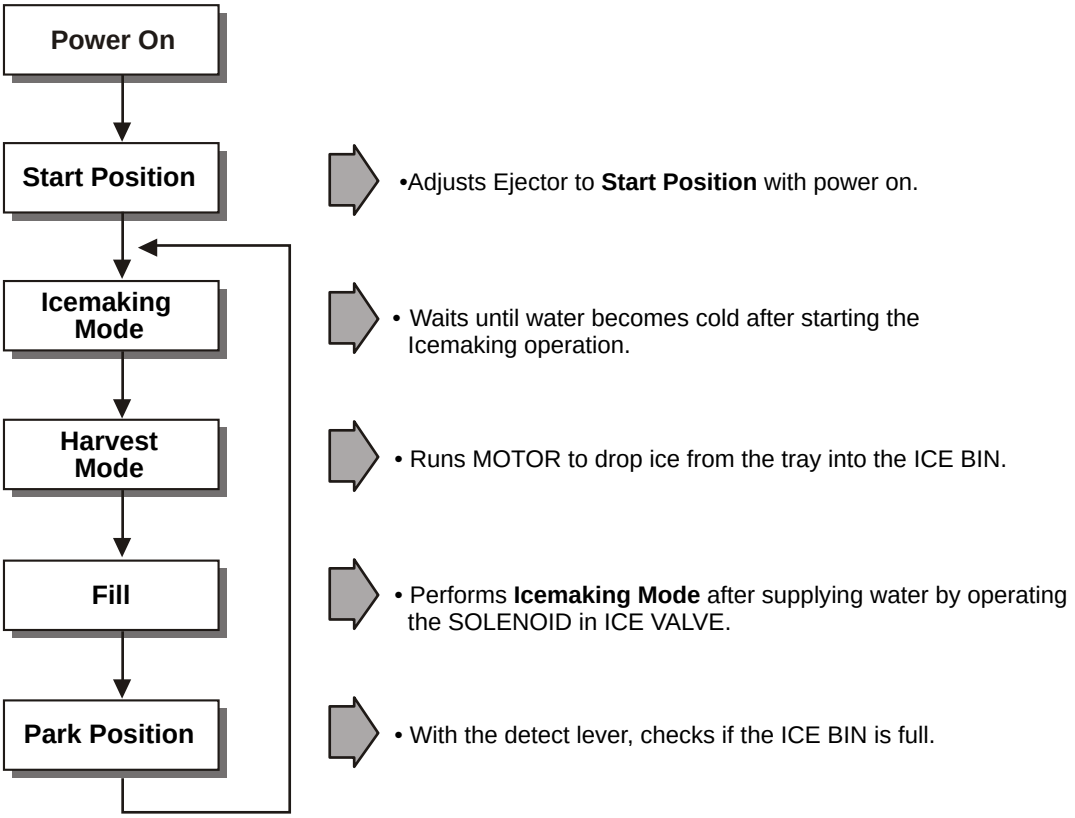

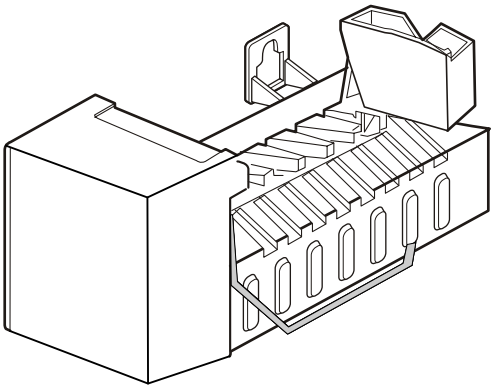

7-2 ICE MAKER FUNCTIONS

7-2-1 Ice Making Mode

1. Icemaking refers to the freezing of supplied water in the ice trays. Complete freezing is assured by measuring the temperature of the Tray with icemaking SENSOR.
2. Icemaking starts after completion of the water fill operation.
3. The icemaking function is completed when the sensor reaches -7°C, 60 to 240 minutes after starting.

NOTE : After icemaker power is ON, the icemaker heater will be on for test for 9 sec.

7-2-2 Harvest Mode

1. Harvest (Ice removing) refers to the operation of dropping ices into the ice bin from the tray when icemaking has completed.
2. Harvest mode:
   (1) The Heater is ON for 30 seconds, then the motor starts.
   (2) Harvest mode is completed if it reaches start position again while Heater & Motor are on at the same time.
      A. ice bin is full : The EJECTOR stops (heater off).
      B. ice bin is not full : The EJECTOR rotates twice to open for ice.

NOTE : If the EJECTOR does not rotate once within 5 minutes in status (2), separate heater control mode starts operating to prevent the EJECTOR from being constrained. (It is recommended that the user open for ice to return to normal mode.)

8. DESCRIPTION OF FUNCTION & CIRCUIT OF MICOM

8-1 FUNCTION

8-1-1 Function

1. When Appliance is plugged in for first time, is set “3” for the refrigerator. You can adjust the refrigerator control temperature by pressing the ADJUST button.
2. When the power is initially applied or restored a power failure, it is set at the last control temperature selected before the power initially applied or restored a power failure.

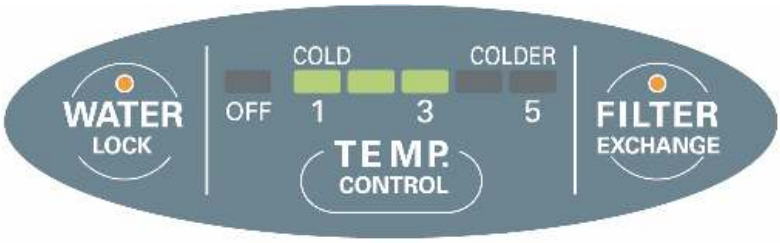

8-1-2 Defrost Cycle

Defrosting starts each time the accumulated COMPRESSOR running time is between 7 and 50 hours. This time is determinate by how long the doors are opened.
For initial power on or for restoring power, defrosting starts when the compressor running time reaches 4 hours.
Defrosting stops if the sensor temperature reaches 50 °F (10 °C) or more. If the sensor doesn’t reach the 50 °F (10°C) in 1 hour, the defrost mode is malfunctioning. (Refer to the defect diagnosis function).
Defrosting won’t function if the sensor if defective (wires are cut or short circuited)

8-1-3 Electrical Parts Operation in Sequence.

Electrical parts such as COMP, defrost heater, freezer FAN, etc. Operate in the following order to prevent noise and parts damage. Several parts are started at the same time at initial power on and are turned off together when TEST is completed.

OPERATING		ORDER	REMARKS
INITIAL POWER ON	Temperature of defrost sensor is 113°F (45°C) or more .	POWER ON → 0.5 Se c → COMP, F-FAN ON	
	Temperature of defrost sensor is lower than 113°F (45°C).	POWER ON → 0.5 Sec → Def-Heater ON → 10 Sec → Def-Heater OFF → 0.5 Sec → COMP, F-FAN ON	

8-1-4 Defect Diagnosis Function

1. If there is a problem, an error code will appear..
2. The buttons will not operate.
3. When the problem is repaired, the display will return to normal.
4. The error code is displayed using the LEDs.

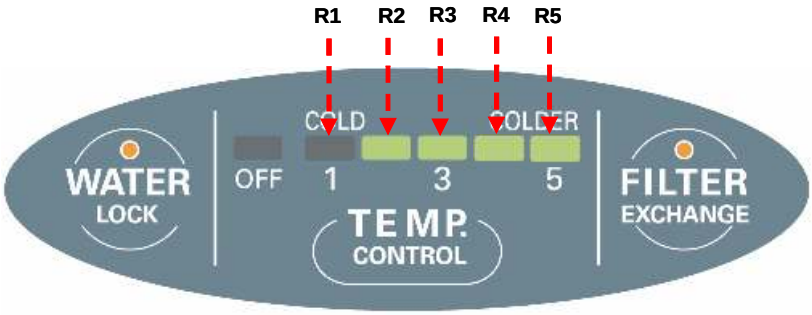

◎ :ON ● :OFF

• ERROR CODE on Refrigerator Temperature panel

NO	Item	Error Code R2 R3 R4 R5	Error Description	Remarks
1	Ref. Sensor	● ◎ ● ●	Ref. Sensor Open or Short	* Check each sensor
2	Heater Sensor	● ● ◎ ●	Defrost Sensor Open or Short	
3	RT Sensor	● ● ● ◎	Ambient Sensor Open or Short	
4	Defrosting Problem	◎ ◎ ◎ ◎	Defrost time last more than one hour and the defrost sensor never reach 10°C or 50°F	Check FUSE-M, DEF-SENSOR, Drain, Heater Drive Relay
5	F-FAN LOCK	● ◎ ◎ ◎	F-FAN LOCKED	Check if something is locking the F-FAN

8-1-5 OFF Mode

1. For active this function you have to press the control button until the OFF mode led is ON. The OFF mode will take effect after 10 seconds.
2. When the OFF mode is active the compressor, the heater, water valve and the fans are inactive. Only the lamps (dispenser and R/F lamps) and the display are active in normal operation (Door open: R/F lamps and display ON).
3. For disable the function you have to press the control button until the desired Control LED is ON and the "OFF LED" will Be inactive. After 10 sec it will be a reset and the desired notch will be set.
4. If a Power Failure occur and the OFF MODE was active, it going to start in OFF MODE.

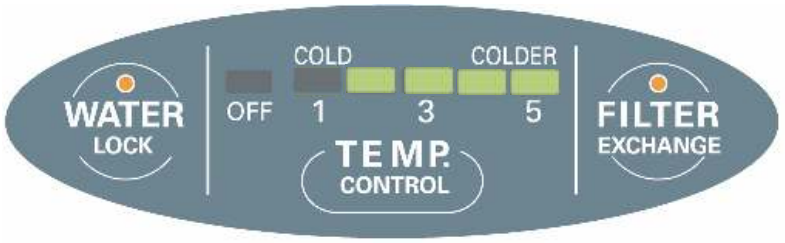

8-1-6 Lock Function

1. On initially operation the Lock Function is OFF.
2. If you wish lock the Water Dispenser, push on the WATER LOCK button, after this, the WATER LOCK LED on the Display will be turned ON..
3. When the Dispenser Lock Function is active the Dispenser lamp don't operate.
4. If you wish unlock the Water Dispenser, press the WATER LOCK button. Then the WATER LOCK LED on the Display will Be turned OFF.

8-1-7 Filter Condition Display Function

1. There is a replacement indicator light for the water filter cartridge on the dispenser.
2. Water filter needs replacement once six months.
3. For reset the counter or turn OFF the filter change indicator press the lock button 3 sec and the counter will start from "0" and The filter change indicator will be OFF.
4. If the power OFF the data will be save in the memory (Power saving mode).

8-1-8 Dispenser Control (only for Dispenser models)

1. For active the water dispenser press and hold the dispenser switch.
2. For stop water dispenser release the dispenser switch.
3. When the door is open for External Models and door is close for Internal Models the Dispenser water valve can not be active.
4. If the Dispenser water valve is active and door OPEN the valve turn OFF. (Only for External Models).
5. When the OFF MODE is active the water valve is disable; only the Dispenser lamp operate normally (Only for External Models)

8-1-9 Dispenser Lamp Function

1.Dispenser Lamp is ON while the water valve is active (Only for External Models) .

8-1-10 Dispenser water valve protection

If the water valve is active for 3 minutes continues, the water valve will turn OFF and can't be active.
If it is release and push again water can be dispensed.

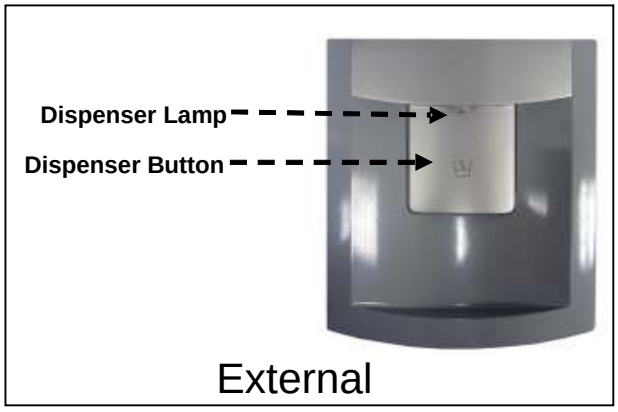

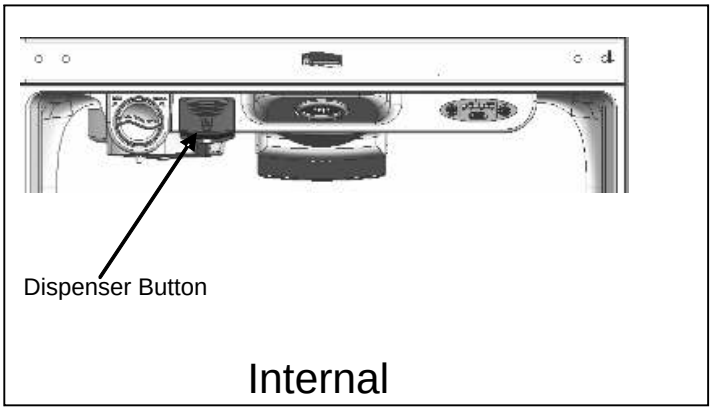

8-1-11 TEST MODE

1. Test mode allows checking the PCB and the function of the product as well as determining the Defective part in case of an error.
2. The test button is on the main PCB of the refrigerator (Test S/W).
3 While in the test mode, the ADJUST button will not operate.
4. After exiting the test mode, be sure to reset by unplugging and plugging in the appliance,
5. If an error, such as a sensor failure is detected while in the test mode, the test mode is cleared and the error code is displayed.
6. While an error code is displayed, the test mode will not be activated.

MODE	Key Control	Operation	Remarks
TEST 1	Push the test button once	1) Continuous operation of the COMP, Freezer FAN and Cooling FAN. 2) DEFROSTING HEATER OFF 3) ALL DISPLAY ON 4) LAMP RELAY ON/OFF OPERATED BY DOOR SWITCH	*The maximum time for TEST 1 is 5 min.
TEST	Push the test button once while in TEST MODE 1	1) COMP OFF 2) Freezer FAN and Cooling FAN OFF 3) Defrosting Heater ON 4) 1, 3, 5 LED ON	Ref. Temp. Display R1 R2 R3 ◎ ● ◎ ● ◎ ◎ :ON ●:OFF Operate max 1 Hr
RESET	Push the test button Once while in TEST MODE 2	Reset to the default settings (Compressor will delay 7 minutes for Power ON)	

8-2 PCB FUNCTION

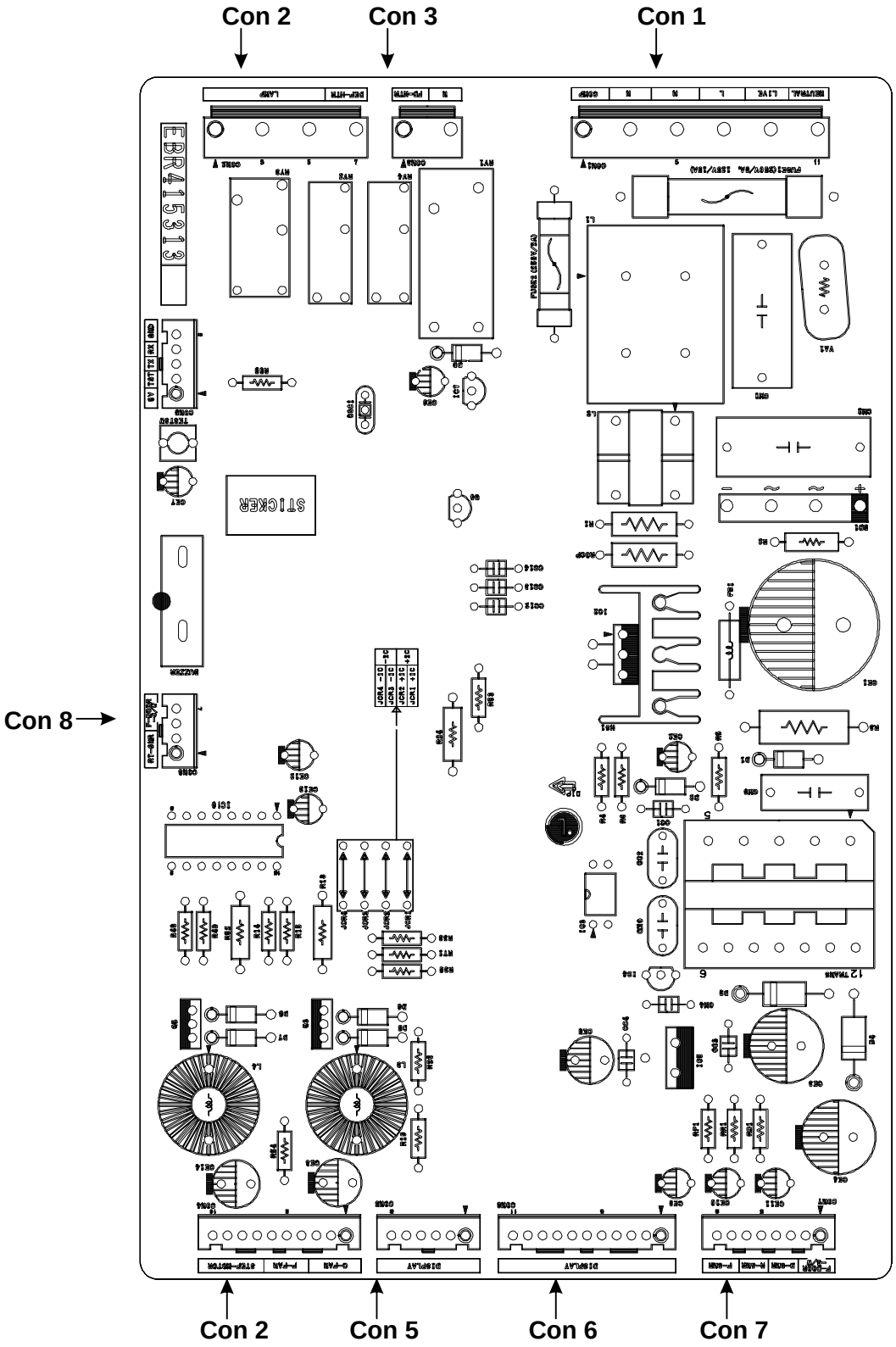

8-2-1 Power Circuit

Power is supplied to the control board at the pin 11 and 9 of connector #1. (Refer to figure 1)

FIGURE 1

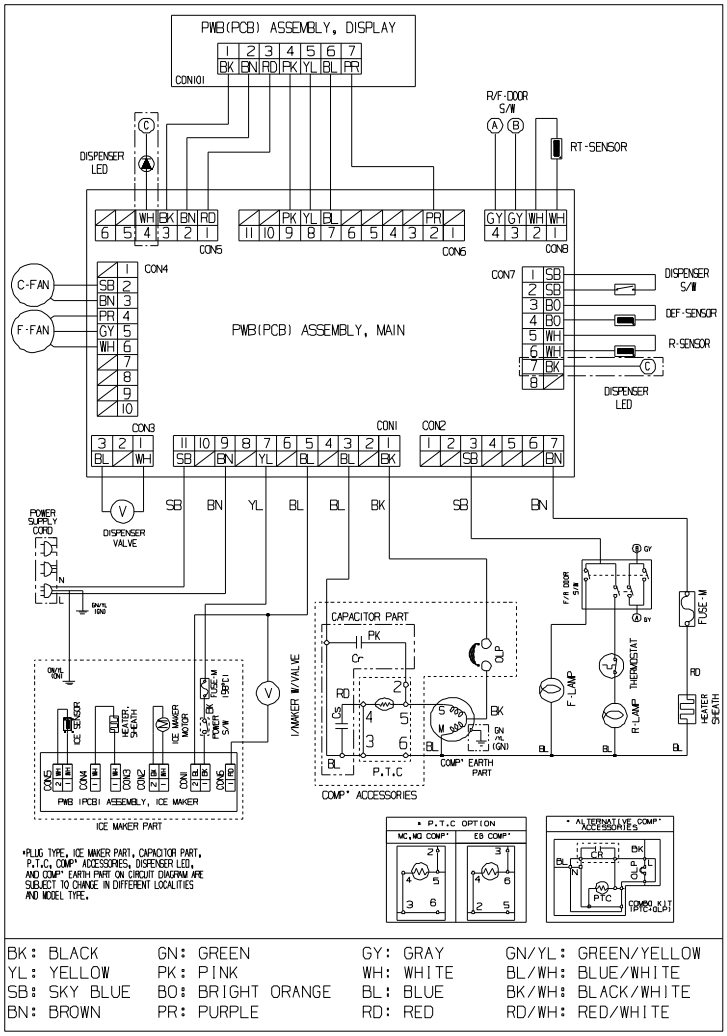

8-2-2 Load and Door Light Circuit (HV)

1. Load Drive Condition Check

To measure outputs of the control board, check voltages between the pins for the following components: (Refer to figure 1)

Circuit	Pin Number	Pin Number	Output Voltage
Compressor	Con 1 Pin 1	Con 1 Pin 3	115 VAC
Defrost Heater	Con 2 Pin 7	Con 1 Pin 3	115 VAC
R LAMP	Con 2 Pin 3	Con 1 Pin 3	115 VAC
Ice Maker	Con 1 Pin 7	Con 1 Pin 5	115 VAC
Dispenser Valve	Con 3 Pin 1	Con 3 Pin 3	115 VAC

CONNECTOR 1						
PIN	11	9	7	5	3	1
	N	L1	L(I/M)	N(I/M)	N	COMP

CONNECTOR 2				
PIN	1	3	5	7
	N/C	DOOR LAMP	N/C	DEF-HTR

CONNECTOR 3		
PIN	1	3
	DISP. VALVE	N

NOTE: When the door of the refrigerator is left open for 7 minutes or longer, the lamp of the refrigerator turns off automatically.

2. Door Monitor Circuit (LV)

Refrigerator	Measurement between pins 4 and 3 Con 8
Door Close	5 volts
Door Open	0 volts

CONNECTOR 8				
PIN	1	2	3	4
	RT-SNR		R-DOOR S/W	

8-2-3 Temperature Sensor Circuit (Refer to figure 2)

Voltage supplied to each sensor wil range between 0.5 volts -22°F(-30°C) and 4.5 volts 122°F(50°C) depending upon the temperature in the compartments. A measurement of 0 volts indicates a short in the sensor circuit. A measurement of 5 volts indicates an open in the sensor circuit.

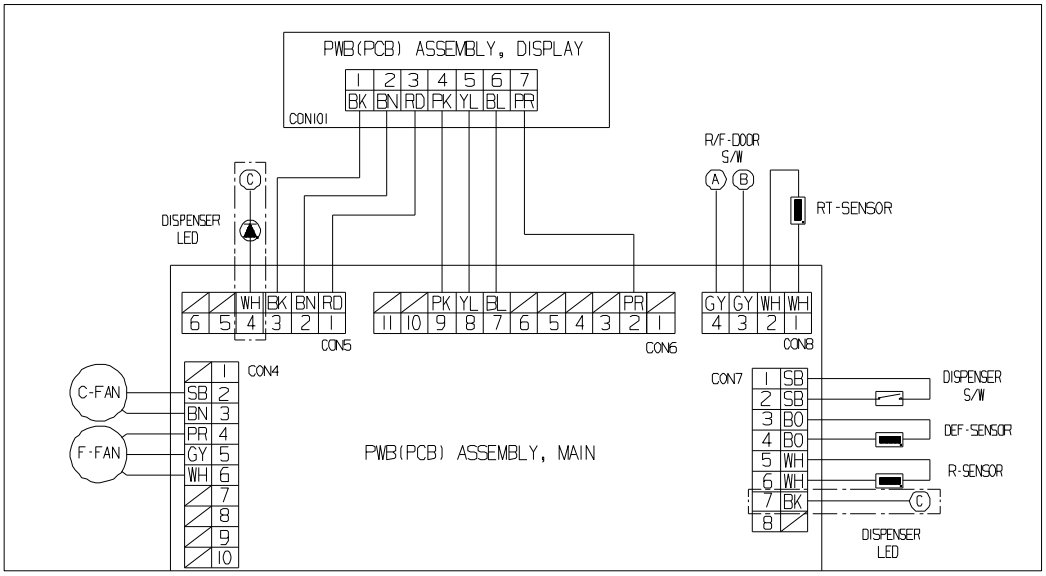

FIGURE 2

CONNECTOR 7								
PIN	1	2	3	4	5	6	7	8
	DISPENSER S/W		D-SNR		R-SNR		DISP LED GND	N/C

Refrigerator	Measurement between pins 1 and 2 Con 7
Disp.S/W ON	0 volts
Disp.S/W OFF	5 volts

CONNECTOR 5						
PIN	1	2	3	4	5	6
	DISPLAY			DISP LED	N/C	

Refrigerator	Measurement between Con 5 pin 4 and Con 7
Disp. LED ON	11 ~ 12 volts
Disp. LED OFF	0 volts

*Only for Dispenser models.

To measure the outputs of the sensors, check the voltages between the pins as in the table. And refer the values in the section ***"RESISTANCE SPECIFICATION OF SENSOR"***

SENSOR	Pin Number	Pin Number
D-SNR	Con 7 Pin 3	Con 7 Pin 4
R-SNR	Con 7 Pin 5	Con 7 Pin 6
RT-SNR	Con 8 Pin 1	Con 8 Pin 2

To measure the outputs of the fans on the control boards check the voltages between the pins for the following components:

FAN	PIN NUMBER	PIN NUMBER	OUTPUT VOLTAGE	
			MOTOR ON	MOTOR OFF
Freezer Fan	Con 4 pin 5	Con 4 pin 6	10 - 14 VCD	2 VCD or less
Cooling Fan	Con 4 pin 2	Con 4 pin 3	10 - 14 VCD	2 VCD or less

CONNECTOR 4										
PIN	1	2	3	4	5	6	7	8	9	10
	C-FAN			F-FAN			N/C			
	N/C	G	V	F	G	V	N/C	N/C	N/C	N/C

8-3 RESISTANCE SPECIFICATION OF SENSOR

TEMPERATURE	RESISTANCE OF REFRIGERATOR & DEFROST SENSOR	VOLTAGE
-20 °C (-4 °F)	77 KΩ	3.73
-15 °C (5 °F)	60 KΩ	3.49
-10 °C (14 °F)	47.3 KΩ	3.22
-5 °C (23 °F)	38.4 KΩ	2.95
0 °C (32 °F)	30 KΩ	2.67
5 °C (41 °F)	24.1 KΩ	2.4
10 °C (50 °F)	19.5 KΩ	2.14
15 °C (59 °F)	15.9 KΩ	1.89
20 °C (68 °F)	13 KΩ	1.66
25 °C (77 °F)	11 KΩ	1.46
30 °C (86 °F)	8.9 KΩ	1.27
40 °C (104 °F)	6.2 KΩ	0.96
50 °C (122 °F)	4.3 KΩ	0.72

• The resistance of the SENSOR has a ±5% common difference.
•Temperature of the SENSOR must be stabilized for minimum of 3 minutes before accurate measurement can be taken.

EXPLODED VIEW (Internal Dispenser)

CASE PARTS

CAUTION: Use the part number to order part, not the position number

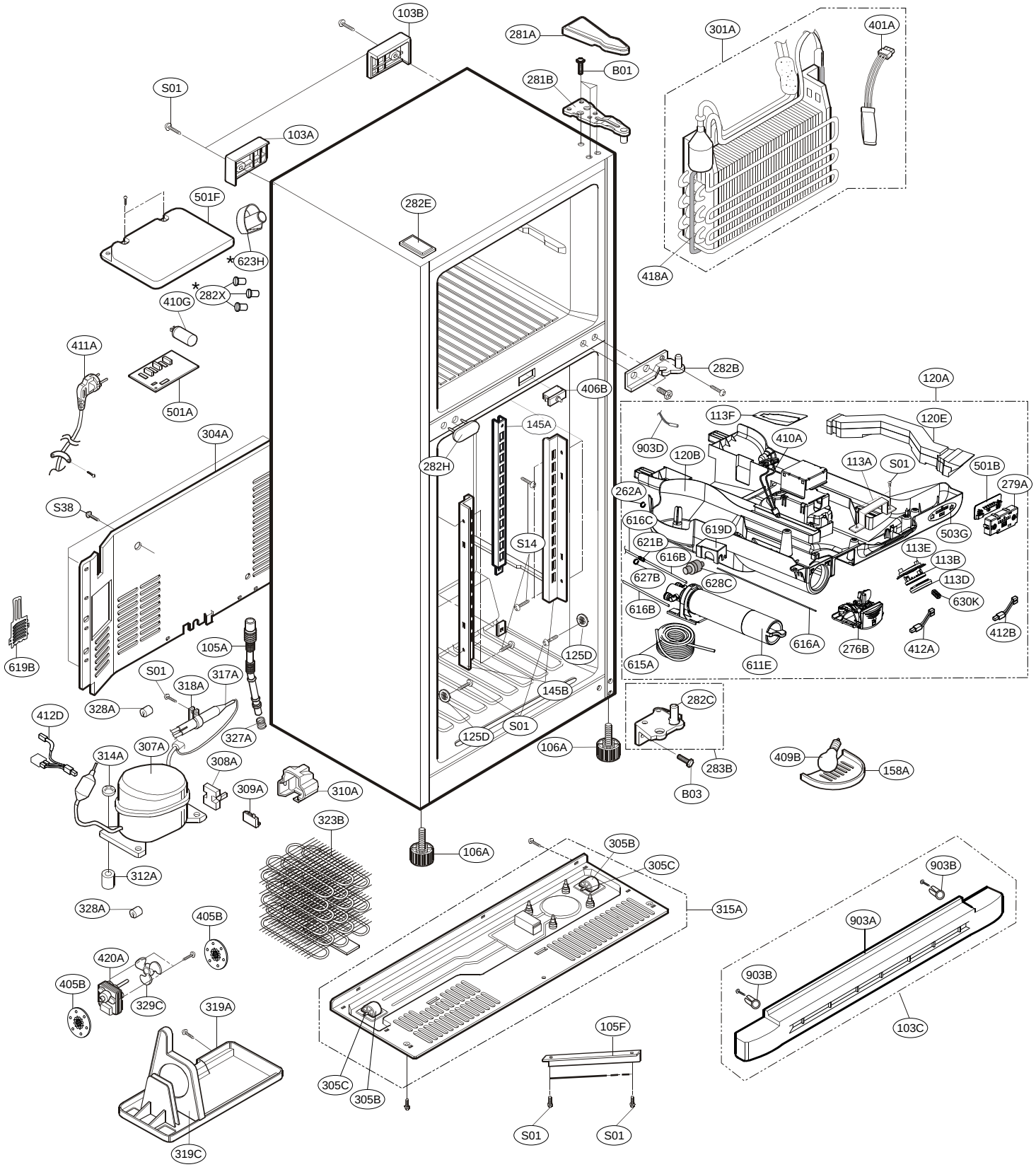

FREEZER PARTS

CAUTION: Use the part number to order part, not the position number

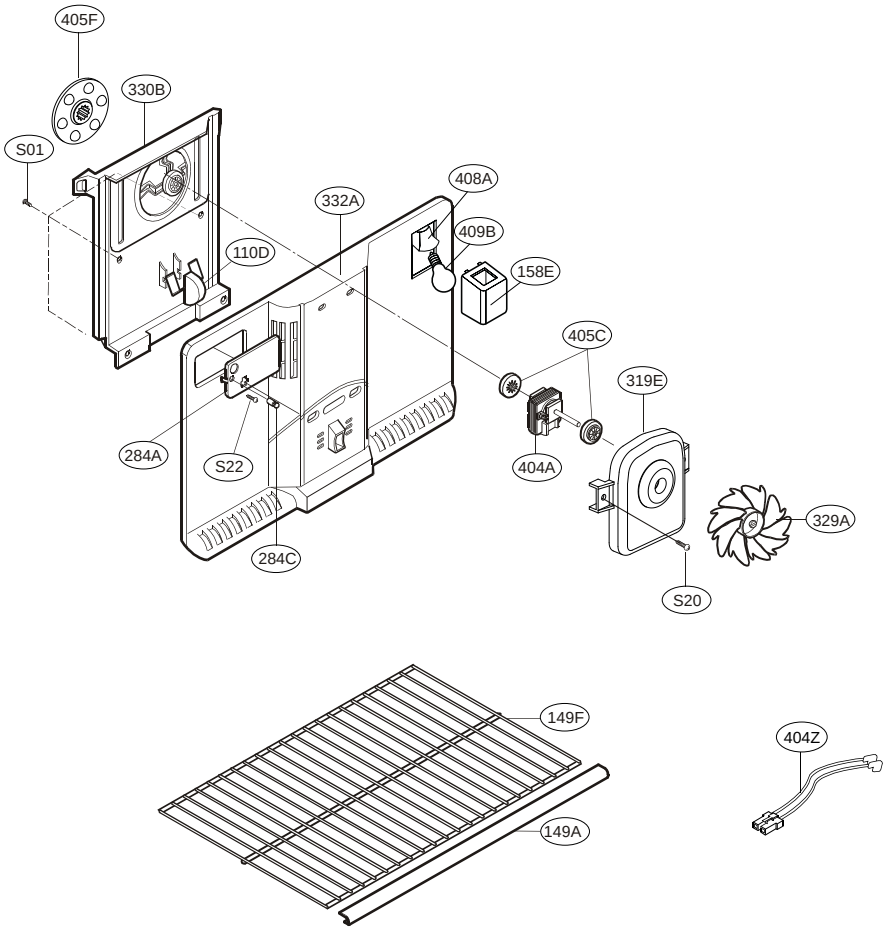

* Only Ready models

REFRIGERATOR PARTS

CAUTION: Use the part number to order part, not the position number

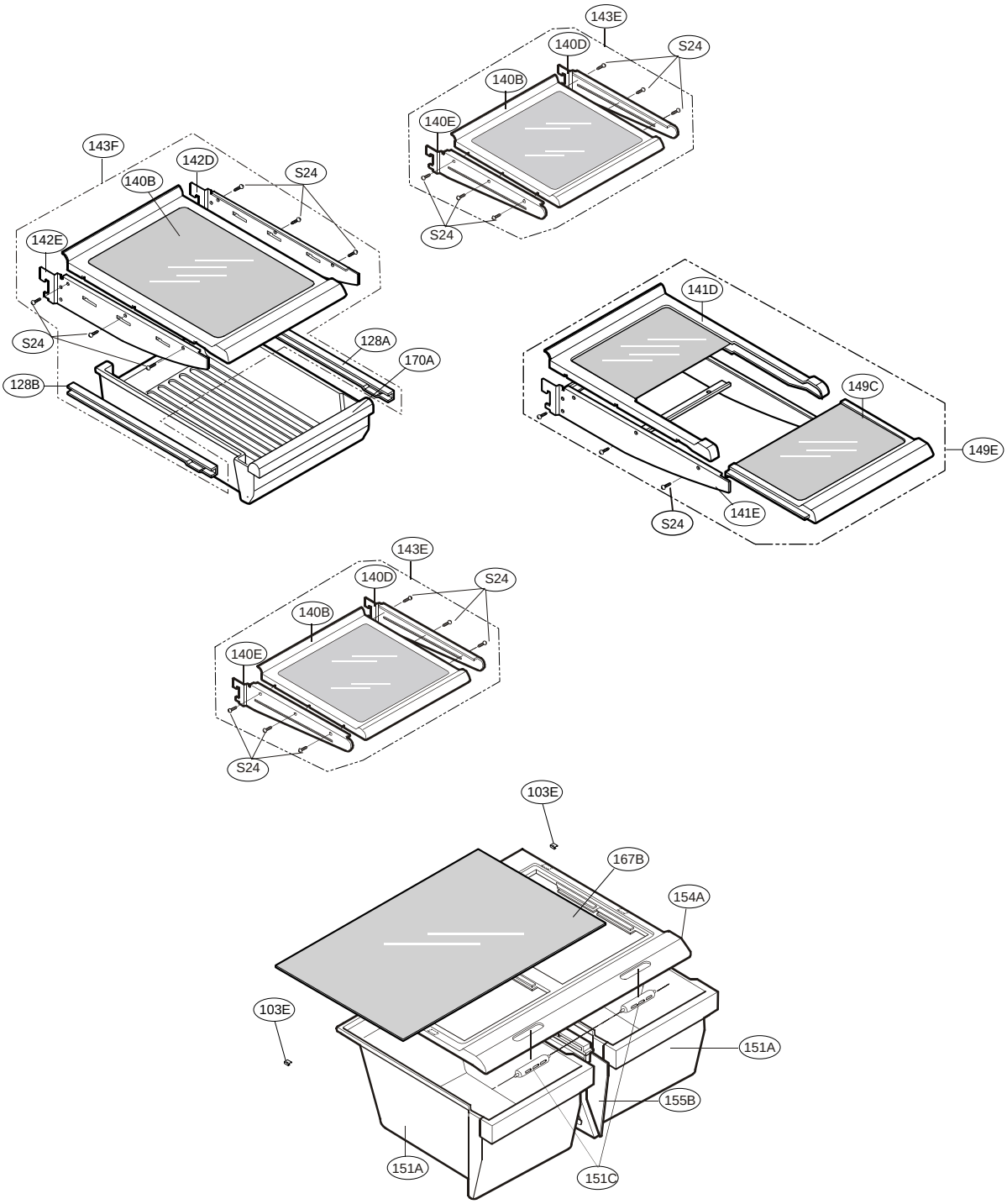

DOOR PARTS

CAUTION: Use the part number to order part, not the position number

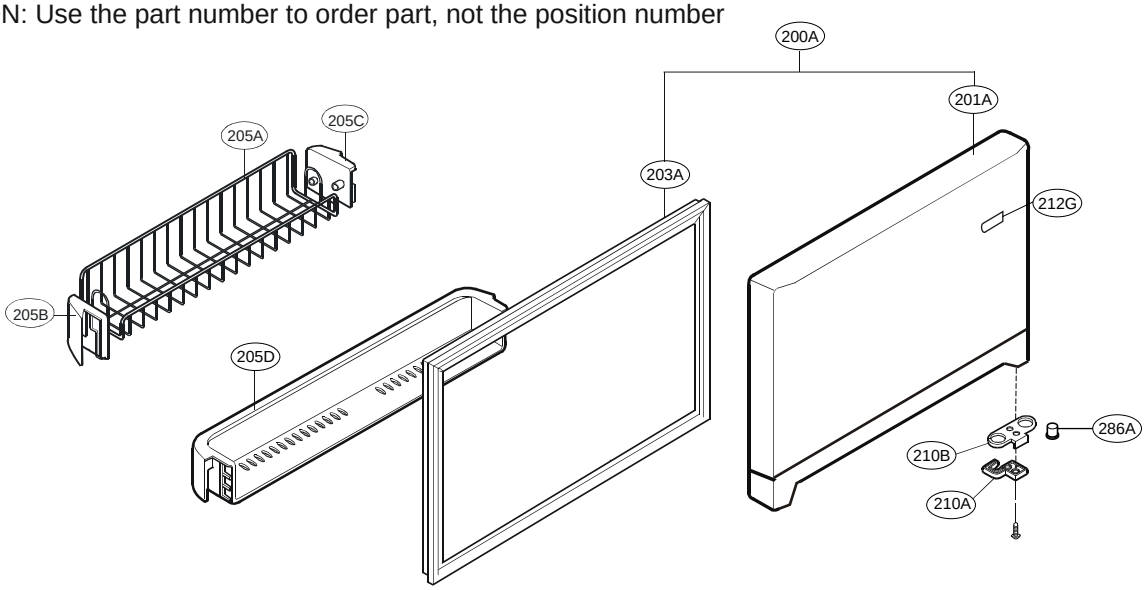

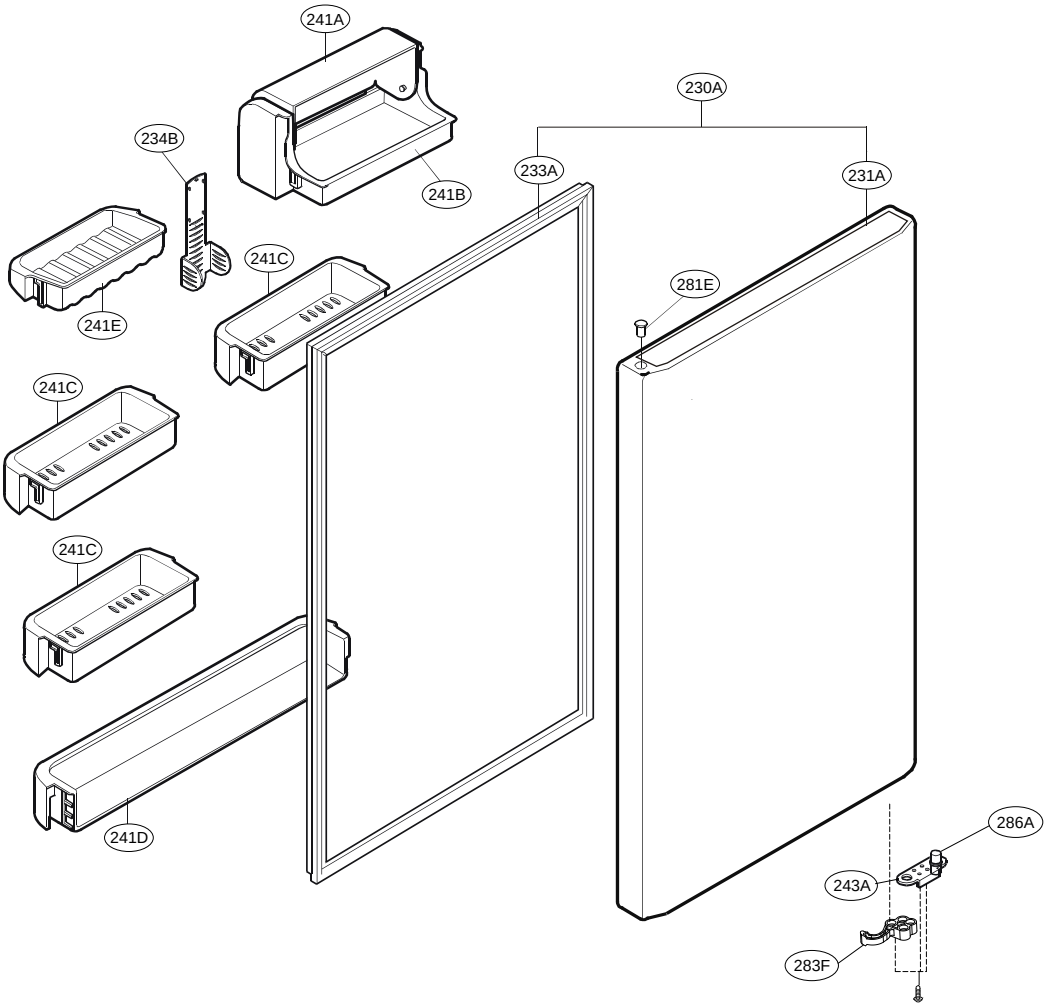

ICE MAKER PARTS

CAUTION: Use the part number to order part, not the position number

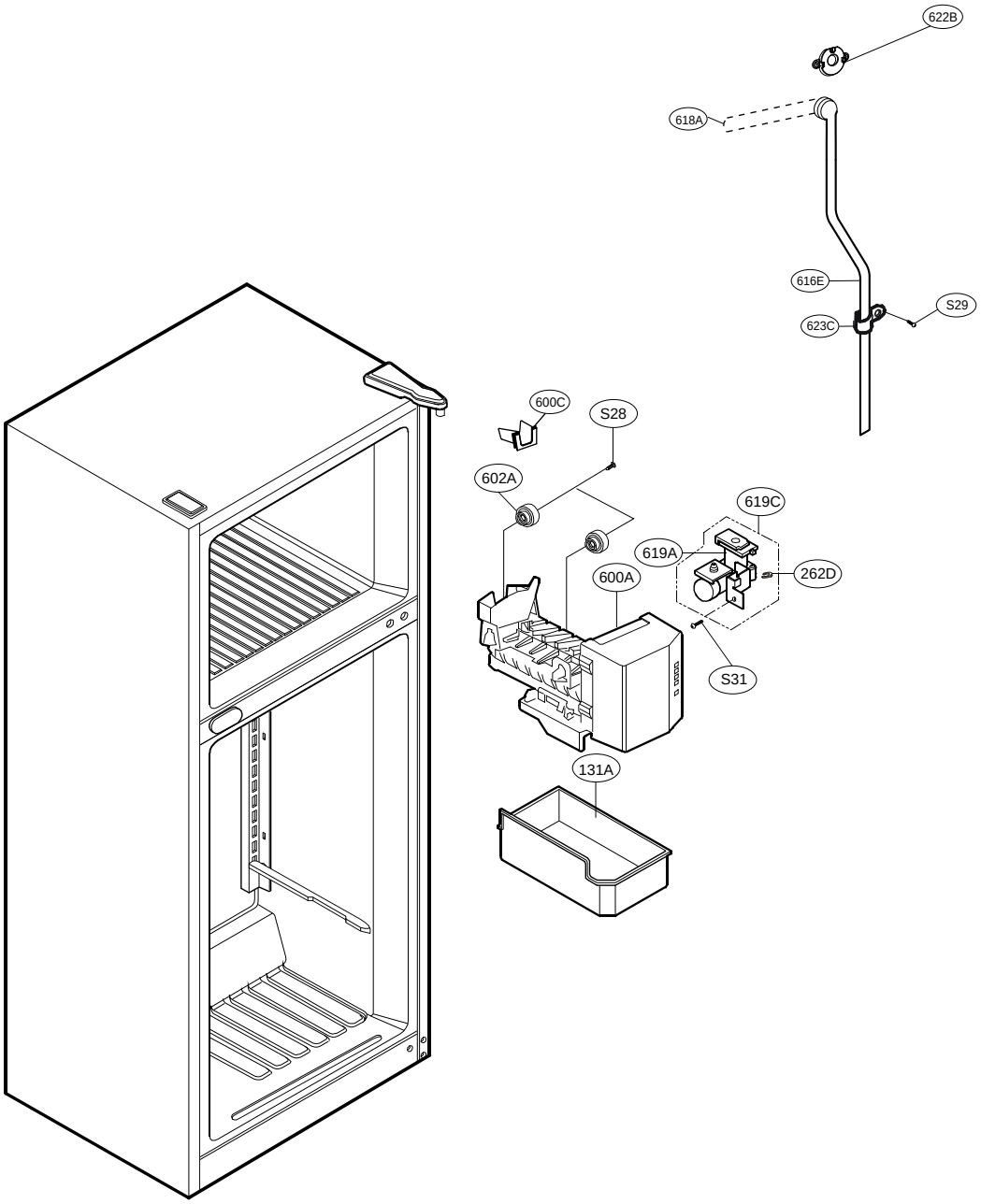

795.79012.900

Loc No.	Part No.	Description
103A	3650JJ2003E	Handle,Rear
103B	3650JJ2003A	Handle,Rear
103C	3551JJ1015A	Cover Assembly,Lower
103E	5218JJ3001A	Rail,Slide
105A	5251JA3003B	Tube Assembly,Drain
105F	5070JJ3002A	Skirt,Lower
106A	4779JA2003A	Leg Assembly,Adjust
110D	4940JL2001C	Knob,Shutter
113A	4930JJ2008A	Holder,Bracket
113B	4930JJ2005A	Holder,Gasket
113D	4986JJ2003B	Gasket,Betta
113E	4974JJ2005A	Guide,Duct
113F	MJH61849501	Supporter
120A	ABQ72930503	Case Assembly,Control Refrigerator
120B	MBN60108701	Case,Control Refrigerator
120E	ADJ72909001	Duct Assembly,Insulation
125D	4930JJ3007A	Holder,Bracket
128A	4975JJ2002A	Guide Assembly,Rail
128B	4975JJ2002B	Guide Assembly,Rail
131A	5074JJ1007A	Bucket,Ice
140B	5027JJ1037A	Shelf Assembly,Refrigerator
140D	MHL38615403	Shelf,Net
140E	MHL38615404	Shelf,Net
141D	5027JJ2011A	Shelf Assembly,Refrigerator
141E	5027JJ2005T	Shelf Assembly,Net
142D	5026JJ2001L	Shelf,Net
142E	5026JJ2001M	Shelf,Net
143E	5027JJ1013G	Shelf Assembly,Refrigerator
143F	5027JJ1013P	Shelf Assembly,Refrigerator
145A	4930JJ2003A	Holder,Shelf
145B	4930JJ2004A	Holder,Shelf
149A	3806JJ3001A	DECOR,SHELF
149C	5027JJ2010A	Shelf Assembly,Refrigerator
149E	5027JJ2009C	Shelf Assembly,Refrigerator
149F	5026JJ1196A	Shelf,Freezer
151A	3391JJ1020A	Tray Assembly,Vegetable
151C	4940JJ2003C	KNOB,SHUTTER
154A	MCK61620301	Cover,TV
155B	4980JJ1010A	Supporter,Cover TV
158A	3550JJ2027A	Cover,Lamp
158E	3550JJ2017C	Cover,Lamp
167B	4890JL1002U	SHELF,GLASS
170A	3391JJ2004G	Tray Assembly,Meat
200A	ADC71006701	Door Assembly,Freezer
201A	5433JJ0086A	Door Foam Assembly,Freezer
203A	4987JJ1004R	Gasket Assembly,Door
205A	5004JJ1017A	Basket,Door
205B	5004JJ2002A	Basket,Tilt
205C	5004JJ2003A	Basket,Tilt
205D	5004JJ1015A	Basket,Door
210A	4620JJ2009A	Stopper,Door
210B	4974JA3031B	Guide,Stopper
212G	4140JD1031A	Name Plate
230A	ADC71006901	Door Assembly,Refrigerator
231A	ADD71007001	Door Foam Assembly,Refrigerator
233A	4987JJ1004S	Gasket Assembly,Door
234B	3806JL1004J	Decor,Duct
241A	3550JJ1030A	Cover,Tray
241B	5004JJ1037A	Basket,Door
241C	AAP72909001	Basket Assembly,Door
241D	5004JJ1016A	Basket,Door
241E	5004JJ1039A	Basket,Door
243A	4620JJ3006A	Stopper,Door
262A	4930JA3093A	Holder,Bracket
262D	4004JA3002A	Clip
276B	ABH72973701	Button Assembly
279A	MBN60007701	Case,Display
281A	3550JJ2013A	Cover,Hinge
281B	4775JJ2003B	Hinge Assembly,Upper
281E	5006JJ3003A	Cap,Hinge
282B	4775JJ2002A	Hinge Assembly,Center
282C	1PZZJJ3002F	Pin,Common
282E	5006JJ2001A	Cap,Hinge
282H	5006JJ3004A	Cap,Hinge
283B	4775JJ2013B	Hinge Assembly,Lower
283F	4620JJ2007A	Stopper,Door
284A	3550JJ2023A	Cover,Grille Fan
284C	5006JA3080A	Cap,Screw
286A	4984JJ3003A	BUSH
286A	4984JJ3003A	BUSH

Loc No.	Part No.	Description
301A	5421JJ0003A	Evaporator Assembly
304A	3551JJ2008A	Cover Assembly,Machinery(Rear)
305B	4580JJ3001A	Roller
305C	4J04238A	Pin,Common
307A	TCA33414101	Compressor,Set Assembly
308A	6748C-0004D	Thermistor Assembly,PTC
309A	6750C-0005P	Overload Protect
310A	3550JA2059A	Cover,PTC
312A	5040JA3031A	Damper,Compressor
314A	4620JA3009B	Stopper,Compressor
315A	3103JJ1001K	Base Assembly,Compressor
317A	5851JJ2002F	Drier Assembly
318A	4930JA3034A	Holder,Drier
319A	3390JJ0004A	Tray,Drip
319C	MEA41997401	Guide,Fan
319E	4810JJ2005A	Bracket,Motor
323B	5403JJ1008A	Condenser Assembly,Wire
327A	5006JA3034A	Cap,Drain Tube
328A	4J03020A	Damper,Pipe
329A	5901JJ1003A	Fan Assembly
329C	ADP36665702	Fan Assembly
330B	MHN58555001	Shroud,Freezer
332A	3531JJ1005G	Grille Assembly,Fan
401A	4781JK2001A	Controller Assembly
404A	4681JK1004A	AC Motor
404Z	6877JB1223F	Harness Assembly
405B	5040JJ2001A	Damper,Motor Support
405C	5040JA2009B	Damper,Motor Support
405F	5040JA2004B	Damper,Motor Support
406B	6600JB2004A	Switch,Push Button
408A	6621JK2001A	Harness Assembly
409B	6912JK2002E	Lamp,Incandescent
409D	MGW61842601	Reflector,Lamp
410A	EAD60664701	Harness Assembly
410G	0CZZJB2012J	Capacitor,Electric Appliance Film,Box
411A	6411JK1006A	Power Cord Assembly
412A	EAD59672201	Harness Assembly
412B	EAD59741301	Harness Assembly
412D	6877JK2011D	Harness Assembly
418A	5300JK1003D	Heater,Sheath
420A	4681JB1029J	Motor,DC
501A	EBR41531307	PCB Assembly,Main
501B	EBR59400501	PCB Assembly,Display
501F	3551JJ1020A	Cover Assembly,PCB
503G	MCR61620401	Decor,Control
600A	5989JA0002P	Ice Maker Assembly,Kit
600C	MEA32865501	Guide,Tube
602A	4931JA3005B	Holder Assembly,Bracket
611E	5231JA2005E	Filter Assembly,Head
615A	MJM61842001	Tank,Water
616A	5210JA3030X	Tube,Plastic
616B	5210JA3030W	Tube,Plastic
616C	5210JA3030Z	Tube,Plastic
616D	AJR72929601	Tube Assembly,Inject
616E	5211JA2003C	Tube Assembly,Inject
618A	5210JJ3006B	Tube,Inject
619A	5220JA2009B	Valve,Water
619B	3550JJ2024A	Cover,Valve
619C	AJU55759302	Valve Assembly,Water
619D	MCK61866101	Cover,Valve
621B	4932JA3002F	Connector,Tube
622B	MJH61841901	Supporter,Tube Guide
623C	4770JA3001A	Band
627B	4930JA3091A	Holder,Bracket
628C	5220JB2001A	Valve,Water
630K	4970JA3016A	Spring
903A	3550JJ0005A	Cover,Lower
903B	4930JJ2021A	Holder,Cover(Lower)
903D	6500JK1003A	Sensor,Temperature
B01	J351-00004L	Screw,Customized
B03	J351-00004P	Screw,Customized
S01	4J00415D	Screw,Customized
S14	3J05696W	Screw,Customized
S20	4001JA3001A	Screw Assembly
S22	J471-00001J	Screw,Customized
S24	1SZZJA3011B	Screw,Customized
S28	1SZZJJ3005E	Screw,Customized
S29	4J00415D	Screw,Customized
S31	4000W4A003A	Screw,Customized
S38	4J00415D	Screw,Customized

795.79013.900

Loc No.	Part No.	Description
103A	3650JJ2003H	Handle,Rear
103B	3650JJ2003D	Handle,Rear
103C	3551JJ1015G	Cover Assembly,Lower
103E	5218JJ3001A	Rail,Slide
105A	5251JA3003B	Tube Assembly,Drain
105F	5070JJ3002A	Skirt,Lower
106A	4779JA2003A	Leg Assembly,Adjust
110D	4940JL2001C	Knob,Shutter
113A	4930JJ2005A	Holder,Gasket
113B	4930JJ2008A	Holder,Bracket
113D	4986JJ2003B	Gasket,Betta
113E	4974JJ2005A	Guide,Duct
113F	MJH61849501	Supporter
120A	ABQ72930503	Case Assembly,Control Refrigerator
120B	MBN60108701	Case,Control Refrigerator
120E	ADJ72909001	Duct Assembly,Insulation
125D	4930JJ3007A	Holder,Bracket
128A	4975JJ2002A	Guide Assembly,Rail
128B	4975JJ2002B	Guide Assembly,Rail
131A	5074JJ1007A	Bucket,Ice
140B	5027JJ1037A	Shelf Assembly,Refrigerator
140D	MHL38615403	Shelf,Net
140E	MHL38615404	Shelf,Net
141D	5027JJ2011A	Shelf Assembly,Refrigerator
141E	5027JJ2005T	Shelf Assembly,Net
142D	5026JJ2001L	Shelf,Net
142E	5026JJ2001M	Shelf,Net
143E	5027JJ1013G	Shelf Assembly,Refrigerator
143F	5027JJ1013P	Shelf Assembly,Refrigerator
145A	4930JJ2003A	Holder,Shelf
145B	4930JJ2004A	Holder,Shelf
149A	3806JJ3001A	DECOR,SHELF
149C	5027JJ2010A	Shelf Assembly,Refrigerator
149E	5027JJ2009C	Shelf Assembly,Refrigerator
149F	5026JJ1196A	Shelf,Freezer
151A	3391JJ1020A	Tray Assembly,Vegetable
151C	4940JJ2003C	KNOB,SHUTTER
154A	MCK61620301	Cover,TV
155B	4980JJ1010A	Supporter,Cover TV
158A	3550JJ2027A	Cover,Lamp
158E	3550JJ2017C	Cover,Lamp
167B	4890JL1002U	SHELF,GLASS
170A	3391JJ2004G	Tray Assembly,Meat
200A	ADC71006705	Door Assembly,Freezer
201A	ADD71006805	Door Foam Assembly,Freezer
203A	ADX52752623	Gasket Assembly,Door
205A	5004JJ1017A	Basket,Door
205B	5004JJ2002A	Basket,Tilt
205C	5004JJ2003A	Basket,Tilt
205D	5004JJ1015A	Basket,Door
210A	4620JJ2009A	Stopper,Door
210B	4974JA3031B	Guide,Stopper
212G	4140JD1031A	Name Plate
230A	ADC71006905	Door Assembly,Refrigerator
231A	ADD71007005	Door Foam Assembly,Refrigerator
233A	ADX52752622	Gasket Assembly,Door
234B	3806JL1004J	Decor,Duct
241A	3550JJ1030A	Cover,Tray
241B	5004JJ1037A	Basket,Door
241C	AAP72909001	Basket Assembly,Door
241D	5004JJ1016A	Basket,Door
241E	5004JJ1039A	Basket,Door
243A	4620JJ3006D	Stopper,Door
262A	4930JA3093A	Holder,Bracket
262D	4004JA3002A	Clip
276B	ABH72973701	Button Assembly
279A	MBN60007701	Case,Display
281A	3550JJ2013D	Cover,Hinge
281B	4775JJ2003B	Hinge Assembly,Upper
281E	5006JJ3003F	Cap,Hinge
282B	4775JJ2002A	Hinge Assembly,Center
282C	1PZZJJ3002F	Pin,Common
282E	5006JJ2001G	Cap,Hinge
282H	5006JJ3004F	Cap,Hinge
283B	4775JJ2013B	Hinge Assembly,Lower
283F	4620JJ2007A	Stopper,Door
284A	3550JJ2023A	Cover,Grille Fan
284C	5006JA3080A	Cap,Screw
286A	4984JJ3003A	BUSH
286A	4984JJ3003A	BUSH

Loc No.	Part No.	Description
301A	5421JJ0003A	Evaporator Assembly
304A	3551JJ2008A	Cover Assembly,Machinery(Rear)
305B	4580JJ3001A	Roller
305C	4J04238A	Pin,Common
307A	TCA33414101	Compressor,Set Assembly
308A	6748C-0004D	Thermistor Assembly,PTC
309A	6750C-0005P	Overload Protect
310A	3550JA2059A	Cover,PTC
312A	5040JA3031A	Damper,Compressor
314A	4620JA3009B	Stopper,Compressor
315A	3103JJ1001K	Base Assembly,Compressor
317A	5851JJ2002F	Drier Assembly
318A	4930JA3034A	Holder,Drier
319A	3390JJ0004A	Tray,Drip
319C	MEA41997401	Guide,Fan
319E	4810JJ2005A	Bracket,Motor
323B	5403JJ1008A	Condenser Assembly,Wire
327A	5006JA3034A	Cap,Drain Tube
328A	4J03020A	Damper,Pipe
329A	5901JJ1003A	Fan Assembly
329C	ADP36665702	Fan Assembly
330B	MHN58555001	Shroud,Freezer
332A	3531JJ1005G	Grille Assembly,Fan
401A	4781JK2001A	Controller Assembly
404A	4681JK1004A	AC Motor
404Z	6877JB1223F	Harness Assembly
405B	5040JJ2001A	Damper,Motor Support
405C	5040JA2009B	Damper,Motor Support
405F	5040JA2004B	Damper,Motor Support
406B	6600JB2004C	Switch,Push Button
408A	6621JK2001A	Harness Assembly
409B	6912JK2002E	Lamp,Incandescent
409D	MGW61842601	Reflector,Lamp
410A	EAD60664701	Harness Assembly
410G	0CZZJB2012J	Capacitor,Electric Appliance Film,Box
411A	6411JK1006A	Power Cord Assembly
412A	EAD59672201	Harness Assembly
412B	EAD59741301	Harness Assembly
412D	6877JK2011D	Harness Assembly
418A	5300JK1003D	Heater,Sheath
420A	4681JB1029J	Motor,DC
501A	EBR41531307	PCB Assembly,Main
501B	EBR59400501	PCB Assembly,Display
501F	3551JJ1020A	Cover Assembly,PCB
503G	MCR61620401	Decor,Control
600A	5989JA0002P	Ice Maker Assembly,Kit
600C	MEA32865501	Guide,Tube
602A	4931JA3005B	Holder Assembly,Bracket
611E	5231JA2005E	Filter Assembly,Head
615A	MJM61842001	Tank,Water
616A	5210JA3030X	Tube,Plastic
616B	5210JA3030W	Tube,Plastic
616C	5210JA3030Z	Tube,Plastic
616D	AJR72929601	Tube Assembly,Inject
616E	5211JA2003C	Tube Assembly,Inject
618A	5210JJ3006B	Tube,Inject
619A	5220JA2009B	Valve,Water
619B	3550JJ2024A	Cover,Valve
619C	AJU55759302	Valve Assembly,Water
619D	MCK61866101	Cover,Valve
621B	4932JA3002F	Connector,Tube
622B	MJH61841901	Supporter,Tube Guide
623C	4770JA3001A	Band
627B	4930JA3091A	Holder,Bracket
628C	5220JB2001A	Valve,Water
630K	4970JA3016A	Spring
903A	3550JJ0005D	Cover,Lower
903B	4930JJ2021A	Holder,Cover(Lower)
903D	6500JK1003A	Sensor,Temperature
B01	J351-00004L	Screw,Customized
B03	J351-00004P	Screw,Customized
S01	4J00415D	Screw,Customized
S14	3J05696W	Screw,Customized
S20	4001JA3001A	Screw Assembly
S22	J471-00001J	Screw,Customized
S24	1SZZJA3011B	Screw,Customized
S28	1SZZJJ3005E	Screw,Customized
S29	4J00415D	Screw,Customized
S31	4000W4A003A	Screw,Customized
S38	4J00415D	Screw,Customized

Loc No.	Part No.	Description
103A	3650JJ2003F	Handle,Rear
103B	3650JJ2003B	Handle,Rear
103C	3551JJ1015C	Cover Assembly,Lower
103E	5218JJ3001A	Rail,Slide
105A	5251JA3003B	Tube Assembly,Drain
105F	5070JJ3002A	Skirt,Lower
106A	4779JA2003A	Leg Assembly,Adjust
110D	4940JL2001C	Knob,Shutter
113A	4930JJ2005A	Holder,Gasket
113B	4930JJ2008A	Holder,Bracket
113D	4986JJ2003B	Gasket,Betta
113E	4974JJ2005A	Guide,Duct
113F	MJH61849501	Supporter
120A	ABQ72930503	Case Assembly,Control Refrigerator
120B	MBN60108701	Case,Control Refrigerator
120E	ADJ72909001	Duct Assembly,Insulation
125D	4930JJ3007A	Holder,Bracket
128A	4975JJ2002A	Guide Assembly,Rail
128B	4975JJ2002B	Guide Assembly,Rail
131A	5074JJ1007A	Bucket,Ice
140B	5027JJ1037A	Shelf Assembly,Refrigerator
140D	MHL38615403	Shelf,Net
140E	MHL38615404	Shelf,Net
141D	5027JJ2011A	Shelf Assembly,Refrigerator
141E	5027JJ2005T	Shelf Assembly,Net
142D	5026JJ2001L	Shelf,Net
142E	5026JJ2001M	Shelf,Net
143E	5027JJ1013G	Shelf Assembly,Refrigerator
143F	5027JJ1013P	Shelf Assembly,Refrigerator
145A	4930JJ2003A	Holder,Shelf
145B	4930JJ2004A	Holder,Shelf
149A	3806JJ3001A	DECOR,SHELF
149C	5027JJ2010A	Shelf Assembly,Refrigerator
149E	5027JJ2009C	Shelf Assembly,Refrigerator
149F	5026JJ1196A	Shelf,Freezer
151A	3391JJ1020A	Tray Assembly,Vegetable
151C	4940JJ2003C	KNOB,SHUTTER
154A	MCK61620301	Cover,TV
155B	4980JJ1010A	Supporter,Cover TV
158A	3550JJ2027A	Cover,Lamp
158E	3550JJ2017C	Cover,Lamp
167B	4890JL1002U	SHELF,GLASS
170A	3391JJ2004G	Tray Assembly,Meat
200A	ADC71006703	Door Assembly,Freezer
201A	ADD71006803	Door Foam Assembly,Freezer
203A	4987JJ1004R	Gasket Assembly,Door
205A	5004JJ1017A	Basket,Door
205B	5004JJ2002A	Basket,Tilt
205C	5004JJ2003A	Basket,Tilt
205D	5004JJ1015A	Basket,Door
210A	4620JJ2009A	Stopper,Door
210B	4974JA3031B	Guide,Stopper
212G	4140JD1031A	Name Plate
230A	ADC71006903	Door Assembly,Refrigerator
231A	ADD71007003	Door Foam Assembly,Refrigerator
233A	4987JJ1004S	Gasket Assembly,Door
234B	3806JL1004J	Decor,Duct
241A	3550JJ1030A	Cover,Tray
241B	5004JJ1037A	Basket,Door
241C	AAP72909001	Basket Assembly,Door
241D	5004JJ1016A	Basket,Door
241E	5004JJ1039A	Basket,Door
243A	4620JJ3006B	Stopper,Door
262A	4930JA3093A	Holder,Bracket
262D	4004JA3002A	Clip
276B	ABH72973701	Button Assembly
279A	MBN60007701	Case,Display
281A	3550JJ2013B	Cover,Hinge
281B	4775JJ2003B	Hinge Assembly,Upper
281E	5006JJ3003D	Cap,Hinge
282B	4775JJ2002A	Hinge Assembly,Center
282C	1PZZJJ3002F	Pin,Common
282E	5006JJ2001E	Cap,Hinge
282H	5006JJ3004A	Cap,Hinge
283B	4775JJ2013B	Hinge Assembly,Lower
283F	4620JJ2007A	Stopper,Door
284A	3550JJ2023A	Cover,Grille Fan
284C	5006JA3080A	Cap,Screw
286A	4984JJ3003A	BUSH
286A	4984JJ3003A	BUSH

Loc No.	Part No.	Description
301A	5421JJ0003A	Evaporator Assembly
304A	3551JJ2008A	Cover Assembly,Machinery(Rear)
305B	4580JJ3001A	Roller
305C	4J04238A	Pin,Common
307A	TCA33414101	Compressor,Set Assembly
308A	6748C-0004D	Thermistor Assembly,PTC
309A	6750C-0005P	Overload Protect
310A	3550JA2059A	Cover,PTC
312A	5040JA3031A	Damper,Compressor
314A	4620JA3009B	Stopper,Compressor
315A	3103JJ1001K	Base Assembly,Compressor
317A	5851JJ2002F	Drier Assembly
318A	4930JA3034A	Holder,Drier
319A	3390JJ0004A	Tray,Drip
319C	MEA41997401	Guide,Fan
319E	4810JJ2005A	Bracket,Motor
323B	5403JJ1008A	Condenser Assembly,Wire
327A	5006JA3034A	Cap,Drain Tube
328A	4J03020A	Damper,Pipe
329A	5901JJ1003A	Fan Assembly
329C	ADP36665702	Fan Assembly
330B	MHN58555001	Shroud,Freezer
332A	3531JJ1005G	Grille Assembly,Fan
401A	4781JK2001A	Controller Assembly
404A	4681JK1004A	AC Motor
404Z	6877JB1223F	Harness Assembly
405B	5040JJ2001A	Damper,Motor Support
405C	5040JA2009B	Damper,Motor Support
405F	5040JA2004B	Damper,Motor Support
406B	6600JB2004D	Switch,Push Button
408A	6621JK2001A	Harness Assembly
409B	6912JK2002E	Lamp,Incandescent
409D	MGW61842601	Reflector,Lamp
410A	EAD60664701	Harness Assembly
410G	0CZZJB2012J	Capacitor,Electric Appliance Film,Box
411A	6411JK1006A	Power Cord Assembly
412A	EAD59672201	Harness Assembly
412B	EAD59741301	Harness Assembly
412D	6877JK2011D	Harness Assembly
418A	5300JK1003D	Heater,Sheath
420A	4681JB1029J	Motor,DC
501A	EBR41531307	PCB Assembly,Main
501B	EBR59400501	PCB Assembly,Display
501F	3551JJ1020A	Cover Assembly,PCB
503G	MCR61620401	Decor,Control
600A	5989JA0002P	Ice Maker Assembly,Kit
600C	MEA32865501	Guide,Tube
602A	4931JA3005B	Holder Assembly,Bracket
611E	5231JA2005E	Filter Assembly,Head
615A	MJM61842001	Tank,Water
616A	5210JA3030X	Tube,Plastic
616B	5210JA3030W	Tube,Plastic
616C	5210JA3030Z	Tube,Plastic
616D	AJR72929601	Tube Assembly,Inject
616E	5211JA2003C	Tube Assembly,Inject
618A	5210JJ3006B	Tube,Inject
619A	5220JA2009B	Valve,Water
619B	3550JJ2024A	Cover,Valve
619C	AJU55759302	Valve Assembly,Water
619D	MCK61866101	Cover,Valve
621B	4932JA3002F	Connector,Tube
622B	MJH61841901	Supporter,Tube Guide
623C	4770JA3001A	Band
627B	4930JA3091A	Holder,Bracket
628C	5220JB2001A	Valve,Water
630K	4970JA3016A	Spring
903A	3550JJ0005B	Cover,Lower
903B	4930JJ2021A	Holder,Cover(Lower)
903D	6500JK1003A	Sensor,Temperature
B01	J351-00004L	Screw,Customized
B03	J351-00004P	Screw,Customized
S01	4J00415D	Screw,Customized
S14	3J05696W	Screw,Customized
S20	4001JA3001A	Screw Assembly
S22	J471-00001J	Screw,Customized
S24	1SZZJA3011B	Screw,Customized
S28	1SZZJJ3005E	Screw,Customized
S29	4J00415D	Screw,Customized
S31	4000W4A003A	Screw,Customized
S38	4J00415D	Screw,Customized

Loc No.	Part No.	Description
103A	3650JJ2003M	Handle,Rear
103B	3650JJ2003L	Handle,Rear
103C	3551JJ1015E	Cover Assembly,Lower
103E	5218JJ3001A	Rail,Slide
105A	5251JA3003B	Tube Assembly,Drain
105F	5070JJ3002A	Skirt,Lower
106A	4779JA2003A	Leg Assembly,Adjust
110D	4940JL2001C	Knob,Shutter
113A	4930JJ2005A	Holder,Gasket
113B	4930JJ2008A	Holder,Bracket
113D	4986JJ2003B	Gasket,Betta
113E	4974JJ2005A	Guide,Duct
113F	MJH61849501	Supporter
120A	ABQ72930503	Case Assembly,Control Refrigerator
120B	MBN60108701	Case,Control Refrigerator
120E	ADJ72909001	Duct Assembly,Insulation
125D	4930JJ3007A	Holder,Bracket
128A	4975JJ2002A	Guide Assembly,Rail
128B	4975JJ2002B	Guide Assembly,Rail
131A	5074JJ1007A	Bucket,Ice
140B	5027JJ1037A	Shelf Assembly,Refrigerator
140D	MHL38615403	Shelf,Net
140E	MHL38615404	Shelf,Net
141D	5027JJ2011A	Shelf Assembly,Refrigerator
141E	5027JJ2005T	Shelf Assembly,Net
142D	5026JJ2001L	Shelf,Net
142E	5026JJ2001M	Shelf,Net
143E	5027JJ1013G	Shelf Assembly,Refrigerator
143F	5027JJ1013P	Shelf Assembly,Refrigerator
145A	4930JJ2003A	Holder,Shelf
145B	4930JJ2004A	Holder,Shelf
149A	3806JJ3001A	DECOR,SHELF
149C	5027JJ2010A	Shelf Assembly,Refrigerator
149E	5027JJ2009C	Shelf Assembly,Refrigerator
149F	5026JJ1196A	Shelf,Freezer
151A	3391JJ1020A	Tray Assembly,Vegetable
151C	4940JJ2003C	KNOB,SHUTTER
154A	MCK61620301	Cover,TV
155B	4980JJ1010A	Supporter,Cover TV
158A	3550JJ2027A	Cover,Lamp
158E	3550JJ2017C	Cover,Lamp
167B	4890JL1002U	SHELF,GLASS
170A	3391JJ2004G	Tray Assembly,Meat
200A	ADC71006702	Door Assembly,Freezer
201A	5433JJ0086B	Door Foam Assembly,Freezer
203A	4987JJ1004V	Gasket Assembly,Door
205A	5004JJ1017A	Basket,Door
205B	5004JJ2002A	Basket,Tilt
205C	5004JJ2003A	Basket,Tilt
205D	5004JJ1015A	Basket,Door
210A	4620JJ2009B	Stopper,Door
210B	4974JA3031B	Guide,Stopper
212G	4140JD1031A	Name Plate
230A	ADC71006902	Door Assembly,Refrigerator
231A	ADD71007002	Door Foam Assembly,Refrigerator
233A	4987JJ1004W	Gasket Assembly,Door
234B	3806JL1004J	Decor,Duct
241A	3550JJ1030A	Cover,Tray
241B	5004JJ1037A	Basket,Door
241C	AAP72909001	Basket Assembly,Door
241D	5004JJ1016A	Basket,Door
241E	5004JJ1039A	Basket,Door
243A	4620JJ3006C	Stopper,Door
262A	4930JA3093A	Holder,Bracket
262D	4004JA3002A	Clip
276B	ABH72973701	Button Assembly
279A	MBN60007701	Case,Display
281A	3550JJ2013C	Cover,Hinge
281B	4775JJ2003B	Hinge Assembly,Upper
281E	5006JJ3003E	Cap,Hinge
282B	4775JJ2002A	Hinge Assembly,Center
282C	1PZZJJ3002F	Pin,Common
282E	5006JJ2001F	Cap,Hinge
282H	5006JJ3004E	Cap,Hinge
283B	4775JJ2013B	Hinge Assembly,Lower
283F	4620JJ2007B	Stopper,Door
284A	3550JJ2023A	Cover,Grille Fan
284C	5006JA3080A	Cap,Screw
286A	4984JJ3003A	BUSH
286A	4984JJ3003A	BUSH

Loc No.	Part No.	Description
301A	5421JJ0003A	Evaporator Assembly
304A	3551JJ2008A	Cover Assembly,Machinery(Rear)
305B	4580JJ3001A	Roller
305C	4J04238A	Pin,Common
307A	TCA33414101	Compressor,Set Assembly
308A	6748C-0004D	Thermistor Assembly,PTC
309A	6750C-0005P	Overload Protect
310A	3550JA2059A	Cover,PTC
312A	5040JA3031A	Damper,Compressor
314A	4620JA3009B	Stopper,Compressor
315A	3103JJ1001K	Base Assembly,Compressor
317A	5851JJ2002F	Drier Assembly
318A	4930JA3034A	Holder,Drier
319A	3390JJ0004A	Tray,Drip
319C	MEA41997401	Guide,Fan
319E	4810JJ2005A	Bracket,Motor
323B	5403JJ1008A	Condenser Assembly,Wire
327A	5006JA3034A	Cap,Drain Tube
328A	4J03020A	Damper,Pipe
329A	5901JJ1003A	Fan Assembly
329C	ADP36665702	Fan Assembly
330B	MHN58555001	Shroud,Freezer
332A	3531JJ1005G	Grille Assembly,Fan
401A	4781JK2001A	Controller Assembly
404A	4681JK1004A	AC Motor
404Z	6877JB1223F	Harness Assembly
405B	5040JJ2001A	Damper,Motor Support
405C	5040JA2009B	Damper,Motor Support
405F	5040JA2004B	Damper,Motor Support
406B	6600JB2004B	Switch,Push Button
408A	6621JK2001A	Harness Assembly
409B	6912JK2002E	Lamp,Incandescent
409D	MGW61842601	Reflector,Lamp
410A	EAD60664701	Harness Assembly
410G	0CZZJB2012J	Capacitor,Electric Appliance Film,Box
411A	6411JK1006A	Power Cord Assembly
412A	EAD59672201	Harness Assembly
412B	EAD59741301	Harness Assembly
412D	6877JK2011D	Harness Assembly
418A	5300JK1003D	Heater,Sheath
420A	4681JB1029J	Motor,DC
501A	EBR41531307	PCB Assembly,Main
501B	EBR59400501	PCB Assembly,Display
501F	3551JJ1020A	Cover Assembly,PCB
503G	MCR61620401	Decor,Control
600A	5989JA0002P	Ice Maker Assembly,Kit
600C	MEA32865501	Guide,Tube
602A	4931JA3005B	Holder Assembly,Bracket
611E	5231JA2005E	Filter Assembly,Head
615A	MJM61842001	Tank,Water
616A	5210JA3030X	Tube,Plastic
616B	5210JA3030W	Tube,Plastic
616C	5210JA3030Z	Tube,Plastic
616D	AJR72929601	Tube Assembly,Inject
616E	5211JA2003C	Tube Assembly,Inject
618A	5210JJ3006B	Tube,Inject
619A	5220JA2009B	Valve,Water
619B	3550JJ2024A	Cover,Valve
619C	AJU55759302	Valve Assembly,Water
619D	MCK61866101	Cover,Valve
621B	4932JA3002F	Connector,Tube
622B	MJH61841901	Supporter,Tube Guide
623C	4770JA3001A	Band
627B	4930JA3091A	Holder,Bracket
628C	5220JB2001A	Valve,Water
630K	4970JA3016A	Spring
903A	3550JJ0005C	Cover,Lower
903B	4930JJ2021A	Holder,Cover(Lower)
903D	6500JK1003A	Sensor,Temperature
B01	J351-00004L	Screw,Customized
B03	J351-00004P	Screw,Customized
S01	4J00415D	Screw,Customized
S14	3J05696W	Screw,Customized
S20	4001JA3001A	Screw Assembly
S22	J471-00001J	Screw,Customized
S24	1SZZJA3011B	Screw,Customized
S28	1SZZJJ3005E	Screw,Customized
S29	4J00415D	Screw,Customized
S31	4000W4A003A	Screw,Customized
S38	4J00415D	Screw,Customized

795.79302.900

Loc No.	Part No.	Description
103A	3650JJ2003E	Handle,Rear
103B	3650JJ2003A	Handle,Rear
103C	3551JJ1015B	Cover Assembly,Lower
103E	5218JJ3001A	Rail,Slide
105A	5251JA3003B	Tube Assembly,Drain
105F	5070JJ3002A	Skirt,Lower
106A	4779JA2003A	Leg Assembly,Adjust
110D	4940JL2001C	Knob,Shutter
113A	4930JJ2008A	Holder,Bracket
113B	4930JJ2005A	Holder,Gasket
113D	4986JJ2003B	Gasket,Betta
113E	4974JJ2005A	Guide,Duct
113F	MJH61849501	Supporter
120A	ABQ72930502	Case Assembly,Control Refrigerator
120B	MBN60108701	Case,Control Refrigerator
120E	ADJ72909001	Duct Assembly,Insulation
125D	4930JJ3007A	Holder,Bracket
128A	4975JJ2002A	Guide Assembly,Rail
128B	4975JJ2002B	Guide Assembly,Rail
131A	5074JJ1007A	Bucket,Ice
140B	5027JJ1039A	Shelf Assembly,Refrigerator
140D	MHL38615403	Shelf,Net
140E	MHL38615404	Shelf,Net
141D	5027JJ2011B	Shelf Assembly,Refrigerator
141E	5027JJ2005V	Shelf Assembly,Net
142D	5026JJ2001L	Shelf,Net
142E	5026JJ2001M	Shelf,Net
143E	5027JJ1013H	Shelf Assembly,Refrigerator
143F	5027JJ1013S	Shelf Assembly,Refrigerator
145A	4930JJ2003A	Holder,Shelf
145B	4930JJ2004A	Holder,Shelf
149A	3806JJ3001B	Decor,Shelf
149C	5027JJ2010B	Shelf Assembly,Refrigerator
149E	5027JJ2009D	Shelf Assembly,Refrigerator
149F	MHL58275201	Shelf,Freezer
151A	3391JJ1020B	Tray Assembly,Vegetable
151C	4940JJ2003C	KNOB,SHUTTER
154A	MCK61620302	Cover,TV
155B	4980JJ1010A	Supporter,Cover TV
158A	3550JJ2027A	Cover,Lamp
158E	3550JJ2017C	Cover,Lamp
167B	4890JL1002V	Shelf,Glass
170A	3391JJ2004H	Tray Assembly,Meat
200A	ADC71006706	Door Assembly,Freezer
201A	ADD71006806	Door Foam Assembly,Freezer
203A	4987JJ1004T	Gasket Assembly,Door
205A	5004JJ1017B	Basket,Door
205B	5004JJ2002A	Basket,Tilt
205C	5004JJ2003A	Basket,Tilt
205D	5004JJ1024A	Basket,Door
210A	4620JJ2009A	Stopper,Door
210B	4974JA3031B	Guide,Stopper
212G	4140JD1031A	Name Plate
230A	ADC71006911	Door Assembly,Refrigerator
231A	ADD71007011	Door Foam Assembly,Refrigerator
233A	4987JJ1004U	Gasket Assembly,Door
234B	3806JL1004J	Decor,Duct
241A	3550JL2003M	Cover,Tray
241B	5004JJ1036A	Basket,Door
241C	AAP72909002	Basket Assembly,Door
241D	5004JJ1025A	Basket,Door
241E	5004JJ1038A	Basket,Door
243A	4620JJ3006A	Stopper,Door
262A	4930JA3093A	Holder,Bracket
262D	4004JA3002A	Clip
276B	ABH72973701	Button Assembly
279A	MBN60007701	Case,Display
281A	3550JJ2013A	Cover,Hinge
281B	4775JJ2003B	Hinge Assembly,Upper
281E	5006JJ3003A	Cap,Hinge
282B	4775JJ2002A	Hinge Assembly,Center
282C	1PZZJJ3002F	Pin,Common
282E	5006JJ2001A	Cap,Hinge
282H	5006JJ3004A	Cap,Hinge
283B	4775JJ2013B	Hinge Assembly,Lower
283F	4620JJ2007A	Stopper,Door
284A	3550JJ2023A	Cover,Grille Fan
284C	5006JA3080A	Cap,Screw
286A	4984JJ3003A	BUSH
286A	4984JJ3003A	BUSH

Loc No.	Part No.	Description
301A	5421JJ0002A	Evaporator Assembly
304A	3551JJ2008B	Cover Assembly,Machinery(Rear)
305B	4580JJ3001A	Roller
305C	4J04238A	Pin,Common
307A	TCA33414101	Compressor,Set Assembly
308A	6748C-0004D	Thermistor Assembly,PTC
309A	6750C-0005P	Overload Protect
310A	3550JA2059A	Cover,PTC
312A	5040JA3031A	Damper,Compressor
314A	4620JA3009B	Stopper,Compressor
315A	3103JJ1001J	Base Assembly,Compressor
317A	5851JJ2002F	Drier Assembly
318A	4930JA3034A	Holder,Drier
319A	3390JJ0004A	Tray,Drip
319C	MEA41997401	Guide,Fan
319E	4810JJ2005A	Bracket,Motor
323B	5403JJ1008A	Condenser Assembly,Wire
327A	5006JA3034A	Cap,Drain Tube
328A	4J03020A	Damper,Pipe
329A	5901JJ1003A	Fan Assembly
329C	ADP36665702	Fan Assembly
330B	MHN58555001	Shroud,Freezer
332A	3531JJ1005H	Grille Assembly,Fan
401A	4781JK2001A	Controller Assembly
404A	4681JK1004A	AC Motor
404Z	6877JB1223F	Harness Assembly
405B	5040JJ2001A	Damper,Motor Support
405C	5040JA2009B	Damper,Motor Support
405F	5040JA2004B	Damper,Motor Support
406B	6600JB2004A	Switch,Push Button
408A	6621JK2001A	Harness Assembly
409B	6912JK2002E	Lamp,Incandescent
409D	MGW61842601	Reflector,Lamp
410A	EAD60664701	Harness Assembly
410G	0CZZJB2012J	Capacitor,Electric Appliance Film,Box
411A	6411JK1006A	Power Cord Assembly
412A	EAD59672201	Harness Assembly
412B	EAD59741301	Harness Assembly
412D	6877JK2011D	Harness Assembly
418A	5300JK1003J	Heater,Sheath
420A	4681JB1029J	Motor,DC
501A	EBR41531307	PCB Assembly,Main
501B	EBR59400501	PCB Assembly,Display
501F	3551JJ1020A	Cover Assembly,PCB
503G	MCR61620401	Decor,Control
600A	5989JA0002P	Ice Maker Assembly,Kit
600C	MEA32865501	Guide,Tube
602A	4931JA3005B	Holder Assembly,Bracket
611E	5231JA2005E	Filter Assembly,Head
615A	MJM61842001	Tank,Water
616A	5210JA3030X	Tube,Plastic
616B	5210JA3030W	Tube,Plastic
616C	5210JA3030Y	Tube,Plastic
616D	AJR72929601	Tube Assembly,Inject
616E	5211JA2003C	Tube Assembly,Inject
618A	5210JJ3006B	Tube,Inject
619A	5220JA2009B	Valve,Water
619B	3550JJ2024A	Cover,Valve
619C	AJU55759302	Valve Assembly,Water
619D	MCK61866101	Cover,Valve
621B	4932JA3002F	Connector,Tube
622B	MJH61841901	Supporter,Tube Guide
623C	4770JA3001A	Band
627B	4930JA3091A	Holder,Bracket
628C	5220JB2001A	Valve,Water
630K	4970JA3016A	Spring
903A	3550JJ0006A	Cover,Lower
903B	4930JJ2021A	Holder,Cover(Lower)
903D	6500JK1003A	Sensor,Temperature
B01	J351-00004L	Screw,Customized
B03	J351-00004P	Screw,Customized
S01	4J00415D	Screw,Customized
S14	3J05696W	Screw,Customized
S20	4001JA3001A	Screw Assembly
S22	J471-00001J	Screw,Customized
S24	1SZZJA3011B	Screw,Customized
S28	1SZZJJ3005E	Screw,Customized
S29	4J00415D	Screw,Customized
S31	4000W4A003A	Screw,Customized
S38	4J00415D	Screw,Customized

Loc No.	Part No.	Description
103A	3650JJ2003H	Handle,Rear
103B	3650JJ2003D	Handle,Rear
103C	3551JJ1015H	Cover Assembly,Lower
103E	5218JJ3001A	Rail,Slide
105A	5251JA3003B	Tube Assembly,Drain
105F	5070JJ3002A	Skirt,Lower
106A	4779JA2003A	Leg Assembly,Adjust
110D	4940JL2001C	Knob,Shutter
113A	4930JJ2008A	Holder,Bracket
113B	4930JJ2005A	Holder,Gasket
113D	4986JJ2003B	Gasket,Betta
113E	4974JJ2005A	Guide,Duct
113F	MJH61849501	Supporter
120A	ABQ72930502	Case Assembly,Control Refrigerator
120B	MBN60108701	Case,Control Refrigerator
120E	ADJ72909001	Duct Assembly,Insulation
125D	4930JJ3007A	Holder,Bracket
128A	4975JJ2002A	Guide Assembly,Rail
128B	4975JJ2002B	Guide Assembly,Rail
131A	5074JJ1007A	Bucket,Ice
140B	5027JJ1039A	Shelf Assembly,Refrigerator
140D	MHL38615403	Shelf,Net
140E	MHL38615404	Shelf,Net
141D	5027JJ2011B	Shelf Assembly,Refrigerator
141E	5027JJ2005V	Shelf Assembly,Net
142D	5026JJ2001L	Shelf,Net
142E	5026JJ2001M	Shelf,Net
143E	5027JJ1013H	Shelf Assembly,Refrigerator
143F	5027JJ1013S	Shelf Assembly,Refrigerator
145A	4930JJ2003A	Holder,Shelf
145B	4930JJ2004A	Holder,Shelf
149A	3806JJ3001B	Decor,Shelf
149C	5027JJ2010B	Shelf Assembly,Refrigerator
149E	5027JJ2009D	Shelf Assembly,Refrigerator
149F	MHL58275201	Shelf,Freezer
151A	3391JJ1020B	Tray Assembly,Vegetable
151C	4940JJ2003C	KNOB,SHUTTER
154A	MCK61620302	Cover,TV
155B	4980JJ1010A	Supporter,Cover TV
158A	3550JJ2027A	Cover,Lamp
158E	3550JJ2017C	Cover,Lamp
167B	4890JL1002V	Shelf,Glass
170A	3391JJ2004H	Tray Assembly,Meat
200A	ADC71006710	Door Assembly,Freezer
201A	ADD71006809	Door Foam Assembly,Freezer
203A	ADX52752625	Gasket Assembly,Door
205A	5004JJ1017B	Basket,Door
205B	5004JJ2002A	Basket,Tilt
205C	5004JJ2003A	Basket,Tilt
205D	5004JJ1024A	Basket,Door
210A	4620JJ2009A	Stopper,Door
210B	4974JA3031B	Guide,Stopper
212G	4140JD1031A	Name Plate
230A	ADC71006915	Door Assembly,Refrigerator
231A	ADD71007015	Door Foam Assembly,Refrigerator
233A	ADX52752624	Gasket Assembly,Door
234B	3806JL1004J	Decor,Duct
241A	3550JL2003M	Cover,Tray
241B	5004JJ1036A	Basket,Door
241C	AAP72909002	Basket Assembly,Door
241D	5004JJ1025A	Basket,Door
241E	5004JJ1038A	Basket,Door
243A	4620JJ3006D	Stopper,Door
262A	4930JA3093A	Holder,Bracket
262D	4004JA3002A	Clip
276B	ABH72973701	Button Assembly
279A	MBN60007701	Case,Display
281A	3550JJ2013D	Cover,Hinge
281B	4775JJ2003B	Hinge Assembly,Upper
281E	5006JJ3003F	Cap,Hinge
282B	4775JJ2002A	Hinge Assembly,Center
282C	1PZZJJ3002F	Pin,Common
282E	5006JJ2001G	Cap,Hinge
282H	5006JJ3004F	Cap,Hinge
283B	4775JJ2013B	Hinge Assembly,Lower
283F	4620JJ2007A	Stopper,Door
284A	3550JJ2023A	Cover,Grille Fan
284C	5006JA3080A	Cap,Screw
286A	4984JJ3003A	BUSH
286A	4984JJ3003A	BUSH

Loc No.	Part No.	Description
301A	5421JJ0002A	Evaporator Assembly
304A	3551JJ2008B	Cover Assembly,Machinery(Rear)
305B	4580JJ3001A	Roller
305C	4J04238A	Pin,Common
307A	TCA33414101	Compressor,Set Assembly
308A	6748C-0004D	Thermistor Assembly,PTC
309A	6750C-0005P	Overload Protect
310A	3550JA2059A	Cover,PTC
312A	5040JA3031A	Damper,Compressor
314A	4620JA3009B	Stopper,Compressor
315A	3103JJ1001J	Base Assembly,Compressor
317A	5851JJ2002F	Drier Assembly
318A	4930JA3034A	Holder,Drier
319A	3390JJ0004A	Tray,Drip
319C	MEA41997401	Guide,Fan
319E	4810JJ2005A	Bracket,Motor
323B	5403JJ1008A	Condenser Assembly,Wire
327A	5006JA3034A	Cap,Drain Tube
328A	4J03020A	Damper,Pipe
329A	5901JJ1003A	Fan Assembly
329C	ADP36665702	Fan Assembly
330B	MHN58555001	Shroud,Freezer
332A	3531JJ1005H	Grille Assembly,Fan
401A	4781JK2001A	Controller Assembly
404A	4681JK1004A	AC Motor
404Z	6877JB1223F	Harness Assembly
405B	5040JJ2001A	Damper,Motor Support
405C	5040JA2009B	Damper,Motor Support
405F	5040JA2004B	Damper,Motor Support
406B	6600JB2004C	Switch,Push Button
408A	6621JK2001A	Harness Assembly
409B	6912JK2002E	Lamp,Incandescent
409D	MGW61842601	Reflector,Lamp
410A	EAD60664701	Harness Assembly
410G	0CZZJB2012J	Capacitor,Electric Appliance Film,Box
411A	6411JK1006A	Power Cord Assembly
412A	EAD59672201	Harness Assembly
412B	EAD59741301	Harness Assembly
412D	6877JK2011D	Harness Assembly
418A	5300JK1003J	Heater,Sheath
420A	4681JB1029J	Motor,DC
501A	EBR41531307	PCB Assembly,Main
501B	EBR59400501	PCB Assembly,Display
501F	3551JJ1020A	Cover Assembly,PCB
503G	MCR61620401	Decor,Control
600A	5989JA0002P	Ice Maker Assembly,Kit
600C	MEA32865501	Guide,Tube
602A	4931JA3005B	Holder Assembly,Bracket
611E	5231JA2005E	Filter Assembly,Head
615A	MJM61842001	Tank,Water
616A	5210JA3030X	Tube,Plastic
616B	5210JA3030W	Tube,Plastic
616C	5210JA3030Y	Tube,Plastic
616D	AJR72929601	Tube Assembly,Inject
616E	5211JA2003C	Tube Assembly,Inject
618A	5210JJ3006B	Tube,Inject
619A	5220JA2009B	Valve,Water
619B	3550JJ2024A	Cover,Valve
619C	AJU55759302	Valve Assembly,Water
619D	MCK61866101	Cover,Valve
621B	4932JA3002F	Connector,Tube
622B	MJH61841901	Supporter,Tube Guide
623C	4770JA3001A	Band
627B	4930JA3091A	Holder,Bracket
628C	5220JB2001A	Valve,Water
630K	4970JA3016A	Spring
903A	3550JJ0006D	Cover,Lower
903B	4930JJ2021A	Holder,Cover(Lower)
903D	6500JK1003A	Sensor,Temperature
B01	J351-00004L	Screw,Customized
B03	J351-00004P	Screw,Customized
S01	4J00415D	Screw,Customized
S14	3J05696W	Screw,Customized
S20	4001JA3001A	Screw Assembly
S22	J471-00001J	Screw,Customized
S24	1SZZJA3011B	Screw,Customized
S28	1SZZJJ3005E	Screw,Customized
S29	4J00415D	Screw,Customized
S31	4000W4A003A	Screw,Customized
S38	4J00415D	Screw,Customized

Loc No.	Part No.	Description
103A	3650JJ2003F	Handle,Rear
103B	3650JJ2003B	Handle,Rear
103C	3551JJ1015D	Cover Assembly,Lower
103E	5218JJ3001A	Rail,Slide
105A	5251JA3003B	Tube Assembly,Drain
105F	5070JJ3002A	Skirt,Lower
106A	4779JA2003A	Leg Assembly,Adjust
110D	4940JL2001C	Knob,Shutter
113A	4930JJ2008A	Holder,Bracket
113B	4930JJ2005A	Holder,Gasket
113D	4986JJ2003B	Gasket,Betta
113E	4974JJ2005A	Guide,Duct
113F	MJH61849501	Supporter
120A	ABQ72930502	Case Assembly,Control Refrigerator
120B	MBN60108701	Case,Control Refrigerator
120E	ADJ72909001	Duct Assembly,Insulation
125D	4930JJ3007A	Holder,Bracket
128A	4975JJ2002A	Guide Assembly,Rail
128B	4975JJ2002B	Guide Assembly,Rail
131A	5074JJ1007A	Bucket,Ice
140B	5027JJ1039A	Shelf Assembly,Refrigerator
140D	MHL38615403	Shelf,Net
140E	MHL38615404	Shelf,Net
141D	5027JJ2011B	Shelf Assembly,Refrigerator
141E	5027JJ2005V	Shelf Assembly,Net
142D	5026JJ2001L	Shelf,Net
142E	5026JJ2001M	Shelf,Net
143E	5027JJ1013H	Shelf Assembly,Refrigerator
143F	5027JJ1013S	Shelf Assembly,Refrigerator
145A	4930JJ2003A	Holder,Shelf
145B	4930JJ2004A	Holder,Shelf
149A	3806JJ3001B	Decor,Shelf
149C	5027JJ2010B	Shelf Assembly,Refrigerator
149E	5027JJ2009D	Shelf Assembly,Refrigerator
149F	MHL58275201	Shelf,Freezer
151A	3391JJ1020B	Tray Assembly,Vegetable
151C	4940JJ2003C	KNOB,SHUTTER
154A	MCK61620302	Cover,TV
155B	4980JJ1010A	Supporter,Cover TV
158A	3550JJ2027A	Cover,Lamp
158E	3550JJ2017C	Cover,Lamp
167B	4890JL1002V	Shelf,Glass
170A	3391JJ2004H	Tray Assembly,Meat
200A	ADC71006708	Door Assembly,Freezer
201A	ADD71006810	Door Foam Assembly,Freezer
203A	4987JJ1004T	Gasket Assembly,Door
205A	5004JJ1017B	Basket,Door
205B	5004JJ2002A	Basket,Tilt
205C	5004JJ2003A	Basket,Tilt
205D	5004JJ1024A	Basket,Door
210A	4620JJ2009A	Stopper,Door
210B	4974JA3031B	Guide,Stopper
212G	4140JD1031A	Name Plate
230A	ADC71006913	Door Assembly,Refrigerator
231A	ADD71007013	Door Foam Assembly,Refrigerator
233A	4987JJ1004U	Gasket Assembly,Door
234B	3806JL1004J	Decor,Duct
241A	3550JL2003M	Cover,Tray
241B	5004JJ1036A	Basket,Door
241C	AAP72909002	Basket Assembly,Door
241D	5004JJ1025A	Basket,Door
241E	5004JJ1038A	Basket,Door
243A	4620JJ3006B	Stopper,Door
262A	4930JA3093A	Holder,Bracket
262D	4004JA3002A	Clip
276B	ABH72973701	Button Assembly
279A	MBN60007701	Case,Display
281A	3550JJ2013B	Cover,Hinge
281B	4775JJ2003B	Hinge Assembly,Upper
281E	5006JJ3003D	Cap,Hinge
282B	4775JJ2002A	Hinge Assembly,Center
282C	1PZZJJ3002F	Pin,Common
282E	5006JJ2001E	Cap,Hinge
282H	5006JJ3004A	Cap,Hinge
283B	4775JJ2013B	Hinge Assembly,Lower
283F	4620JJ2007A	Stopper,Door
284A	3550JJ2023A	Cover,Grille Fan
284C	5006JA3080A	Cap,Screw
286A	4984JJ3003A	BUSH
286A	4984JJ3003A	BUSH

Loc No.	Part No.	Description
301A	5421JJ0002A	Evaporator Assembly
304A	3551JJ2008B	Cover Assembly,Machinery(Rear)
305B	4580JJ3001A	Roller
305C	4J04238A	Pin,Common
307A	TCA33414101	Compressor,Set Assembly
308A	6748C-0004D	Thermistor Assembly,PTC
309A	6750C-0005P	Overload Protect
310A	3550JA2059A	Cover,PTC
312A	5040JA3031A	Damper,Compressor
314A	4620JA3009B	Stopper,Compressor
315A	3103JJ1001J	Base Assembly,Compressor
317A	5851JJ2002F	Drier Assembly
318A	4930JA3034A	Holder,Drier
319A	3390JJ0004A	Tray,Drip
319C	MEA41997401	Guide,Fan
319E	4810JJ2005A	Bracket,Motor
323B	5403JJ1008A	Condenser Assembly,Wire
327A	5006JA3034A	Cap,Drain Tube
328A	4J03020A	Damper,Pipe
329A	5901JJ1003A	Fan Assembly
329C	ADP36665702	Fan Assembly
330B	MHN58555001	Shroud,Freezer
332A	3531JJ1005H	Grille Assembly,Fan
401A	4781JK2001A	Controller Assembly
404A	4681JK1004A	AC Motor
404Z	6877JB1223F	Harness Assembly
405B	5040JJ2001A	Damper,Motor Support
405C	5040JA2009B	Damper,Motor Support
405F	5040JA2004B	Damper,Motor Support
406B	6600JB2004D	Switch,Push Button
408A	6621JK2001A	Harness Assembly
409B	6912JK2002E	Lamp,Incandescent
409D	MGW61842601	Reflector,Lamp
410A	EAD60664701	Harness Assembly
410G	0CZZJB2012J	Capacitor,Electric Appliance Film,Box
411A	6411JK1006A	Power Cord Assembly
412A	EAD59672201	Harness Assembly
412B	EAD59741301	Harness Assembly
412D	6877JK2011D	Harness Assembly
418A	5300JK1003J	Heater,Sheath
420A	4681JB1029J	Motor,DC
501A	EBR41531307	PCB Assembly,Main
501B	EBR59400501	PCB Assembly,Display
501F	3551JJ1020A	Cover Assembly,PCB
503G	MCR61620401	Decor,Control
600A	5989JA0002P	Ice Maker Assembly,Kit
600C	MEA32865501	Guide,Tube
602A	4931JA3005B	Holder Assembly,Bracket
611E	5231JA2005E	Filter Assembly,Head
615A	MJM61842001	Tank,Water
616A	5210JA3030X	Tube,Plastic
616B	5210JA3030W	Tube,Plastic
616C	5210JA3030Y	Tube,Plastic
616D	AJR72929601	Tube Assembly,Inject
616E	5211JA2003C	Tube Assembly,Inject
618A	5210JJ3006B	Tube,Inject
619A	5220JA2009B	Valve,Water
619B	3550JJ2024A	Cover,Valve
619C	AJU55759302	Valve Assembly,Water
619D	MCK61866101	Cover,Valve
621B	4932JA3002F	Connector,Tube
622B	MJH61841901	Supporter,Tube Guide
623C	4770JA3001A	Band
627B	4930JA3091A	Holder,Bracket
628C	5220JB2001A	Valve,Water
630K	4970JA3016A	Spring
903A	3550JJ0006B	Cover,Lower
903B	4930JJ2021A	Holder,Cover(Lower)
903D	6500JK1003A	Sensor,Temperature
B01	J351-00004L	Screw,Customized
B03	J351-00004P	Screw,Customized
S01	4J00415D	Screw,Customized
S14	3J05696W	Screw,Customized
S20	4001JA3001A	Screw Assembly
S22	J471-00001J	Screw,Customized
S24	1SZZJA3011B	Screw,Customized
S28	1SZZJJ3005E	Screw,Customized
S29	4J00415D	Screw,Customized
S31	4000W4A003A	Screw,Customized
S38	4J00415D	Screw,Customized

795.79309.900

Loc No.	Part No.	Description
103A	3650JJ2003M	Handle,Rear
103B	3650JJ2003L	Handle,Rear
103C	3551JJ1015F	Cover Assembly,Lower
103E	5218JJ3001A	Rail,Slide
105A	5251JA3003B	Tube Assembly,Drain
105F	5070JJ3002A	Skirt,Lower
106A	4779JA2003A	Leg Assembly,Adjust
110D	4940JL2001C	Knob,Shutter
113A	4930JJ2008A	Holder,Bracket
113B	4930JJ2005A	Holder,Gasket
113D	4986JJ2003B	Gasket,Betta
113E	4974JJ2005A	Guide,Duct
113F	MJH61849501	Supporter
120A	ABQ72930502	Case Assembly,Control Refrigerator
120B	MBN60108701	Case,Control Refrigerator
120E	ADJ72909001	Duct Assembly,Insulation
125D	4930JJ3007A	Holder,Bracket
128A	4975JJ2002A	Guide Assembly,Rail
128B	4975JJ2002B	Guide Assembly,Rail
131A	5074JJ1007A	Bucket,Ice
140B	5027JJ1039A	Shelf Assembly,Refrigerator
140D	MHL38615403	Shelf,Net
140E	MHL38615404	Shelf,Net
141D	5027JJ2011B	Shelf Assembly,Refrigerator
141E	5027JJ2005V	Shelf Assembly,Net
142D	5026JJ2001L	Shelf,Net
142E	5026JJ2001M	Shelf,Net
143E	5027JJ1013H	Shelf Assembly,Refrigerator
143F	5027JJ1013S	Shelf Assembly,Refrigerator
145A	4930JJ2003A	Holder,Shelf
145B	4930JJ2004A	Holder,Shelf
149A	3806JJ3001B	Decor,Shelf
149C	5027JJ2010B	Shelf Assembly,Refrigerator
149E	5027JJ2009D	Shelf Assembly,Refrigerator
149F	MHL58275201	Shelf,Freezer
151A	3391JJ1020B	Tray Assembly,Vegetable
151C	4940JJ2003C	KNOB,SHUTTER
154A	MCK61620302	Cover,TV
155B	4980JJ1010A	Supporter,Cover TV
158A	3550JJ2027A	Cover,Lamp
158E	3550JJ2017C	Cover,Lamp
167B	4890JL1002V	Shelf,Glass
170A	3391JJ2004H	Tray Assembly,Meat
200A	ADC71006707	Door Assembly,Freezer
201A	ADD71006807	Door Foam Assembly,Freezer
203A	4987JJ1004X	Gasket Assembly,Door
205A	5004JJ1017B	Basket,Door
205B	5004JJ2002A	Basket,Tilt
205C	5004JJ2003A	Basket,Tilt
205D	5004JJ1024A	Basket,Door
210A	4620JJ2009B	Stopper,Door
210B	4974JA3031B	Guide,Stopper
212G	4140JD1031A	Name Plate
230A	ADC71006912	Door Assembly,Refrigerator
231A	ADD71007012	Door Foam Assembly,Refrigerator
233A	4987JJ1004Y	Gasket Assembly,Door
234B	3806JL1004J	Decor,Duct
241A	3550JL2003M	Cover,Tray
241B	5004JJ1036A	Basket,Door
241C	AAP72909002	Basket Assembly,Door
241D	5004JJ1025A	Basket,Door
241E	5004JJ1038A	Basket,Door
243A	4620JJ3006C	Stopper,Door
262A	4930JA3093A	Holder,Bracket
262D	4004JA3002A	Clip
276B	ABH72973701	Button Assembly
279A	MBN60007701	Case,Display
281A	3550JJ2013C	Cover,Hinge
281B	4775JJ2003B	Hinge Assembly,Upper
281E	5006JJ3003E	Cap,Hinge
282B	4775JJ2002A	Hinge Assembly,Center
282C	1PZZJJ3002F	Pin,Common
282E	5006JJ2001F	Cap,Hinge
282H	5006JJ3004E	Cap,Hinge
283B	4775JJ2013B	Hinge Assembly,Lower
283F	4620JJ2007B	Stopper,Door
284A	3550JJ2023A	Cover,Grille Fan
284C	5006JA3080A	Cap,Screw
286A	4984JJ3003A	BUSH
286A	4984JJ3003A	BUSH

Loc No.	Part No.	Description
301A	5421JJ0002A	Evaporator Assembly
304A	3551JJ2008B	Cover Assembly,Machinery(Rear)
305B	4580JJ3001A	Roller
305C	4J04238A	Pin,Common
307A	TCA33414101	Compressor,Set Assembly
308A	6748C-0004D	Thermistor Assembly,PTC
309A	6750C-0005P	Overload Protect
310A	3550JA2059A	Cover,PTC
312A	5040JA3031A	Damper,Compressor
314A	4620JA3009B	Stopper,Compressor
315A	3103JJ1001J	Base Assembly,Compressor
317A	5851JJ2002F	Drier Assembly
318A	4930JA3034A	Holder,Drier
319A	3390JJ0004A	Tray,Drip
319C	MEA41997401	Guide,Fan
319E	4810JJ2005A	Bracket,Motor
323B	5403JJ1008A	Condenser Assembly,Wire
327A	5006JA3034A	Cap,Drain Tube
328A	4J03020A	Damper,Pipe
329A	5901JJ1003A	Fan Assembly
329C	ADP36665702	Fan Assembly
330B	MHN58555001	Shroud,Freezer
332A	3531JJ1005H	Grille Assembly,Fan
401A	4781JK2001A	Controller Assembly
404A	4681JK1004A	AC Motor
404Z	6877JB1223F	Harness Assembly
405B	5040JJ2001A	Damper,Motor Support
405C	5040JA2009B	Damper,Motor Support
405F	5040JA2004B	Damper,Motor Support
406B	6600JB2004B	Switch,Push Button
408A	6621JK2001A	Harness Assembly
409B	6912JK2002E	Lamp,Incandescent
409D	MGW61842601	Reflector,Lamp
410A	EAD60664701	Harness Assembly
410G	0CZZJB2012J	Capacitor,Electric Appliance Film,Box
411A	6411JK1006A	Power Cord Assembly
412A	EAD59672201	Harness Assembly
412B	EAD59741301	Harness Assembly
412D	6877JK2011D	Harness Assembly
418A	5300JK1003J	Heater,Sheath
420A	4681JB1029J	Motor,DC
501A	EBR41531307	PCB Assembly,Main
501B	EBR59400501	PCB Assembly,Display
501F	3551JJ1020A	Cover Assembly,PCB
503G	MCR61620401	Decor,Control
600A	5989JA0002P	Ice Maker Assembly,Kit
600C	MEA32865501	Guide,Tube
602A	4931JA3005B	Holder Assembly,Bracket
611E	5231JA2005E	Filter Assembly,Head
615A	MJM61842001	Tank,Water
616A	5210JA3030X	Tube,Plastic
616B	5210JA3030W	Tube,Plastic
616C	5210JA3030Y	Tube,Plastic
616D	AJR72929601	Tube Assembly,Inject
616E	5211JA2003C	Tube Assembly,Inject
618A	5210JJ3006B	Tube,Inject
619A	5220JA2009B	Valve,Water
619B	3550JJ2024A	Cover,Valve
619C	AJU55759302	Valve Assembly,Water
619D	MCK61866101	Cover,Valve
621B	4932JA3002F	Connector,Tube
622B	MJH61841901	Supporter,Tube Guide
623C	4770JA3001A	Band
627B	4930JA3091A	Holder,Bracket
628C	5220JB2001A	Valve,Water
630K	4970JA3016A	Spring
903A	3550JJ0006C	Cover,Lower
903B	4930JJ2021A	Holder,Cover(Lower)
903D	6500JK1003A	Sensor,Temperature
B01	J351-00004L	Screw,Customized
B03	J351-00004P	Screw,Customized
S01	4J00415D	Screw,Customized
S14	3J05696W	Screw,Customized
S20	4001JA3001A	Screw Assembly
S22	J471-00001J	Screw,Customized
S24	1SZZJA3011B	Screw,Customized
S28	1SZZJJ3005E	Screw,Customized
S29	4J00415D	Screw,Customized
S31	4000W4A003A	Screw,Customized
S38	4J00415D	Screw,Customized

ELIMINATE ACCIDENTS

'You Can Count on me . . . to Work Safely.'

February, 2009