This Owner's Manual is provided and hosted by Appliance Factory Parts.

Appliance Factory Parts
Experts in BBQ, Humidifier, & Appliance Parts
1-800-955-7075

Kenmore 795.75094400 Owner's Manual

Shop genuine replacement parts for Kenmore 795.75094400

Find Your Kenmore Refrigerator Parts - Select From 665 Models

-------- Manual continues below --------

BOTTOM FREEZER REFRIGERATOR

Use & Care Guide

CONGELADOR INFERIOR REFRIGERADOR

Guía para el Uso y Cuidado

CONGÉLATEUR INFÉRIEUR RÉFRIGÉRATEUR

Guide d'Utilisation et d'Entretien

Models / Modelos / Modèles

795.6500✻, 6501✻, 6520✻, 6521✻, 7500✻, 7501✻, 7508✻, 7509✻, 7520✻, 7521✻, 7528✻, 7529✻

✻= color number / número de color / numéro de couleur

ENGLISH ESPAÑOL FRANÇAIS

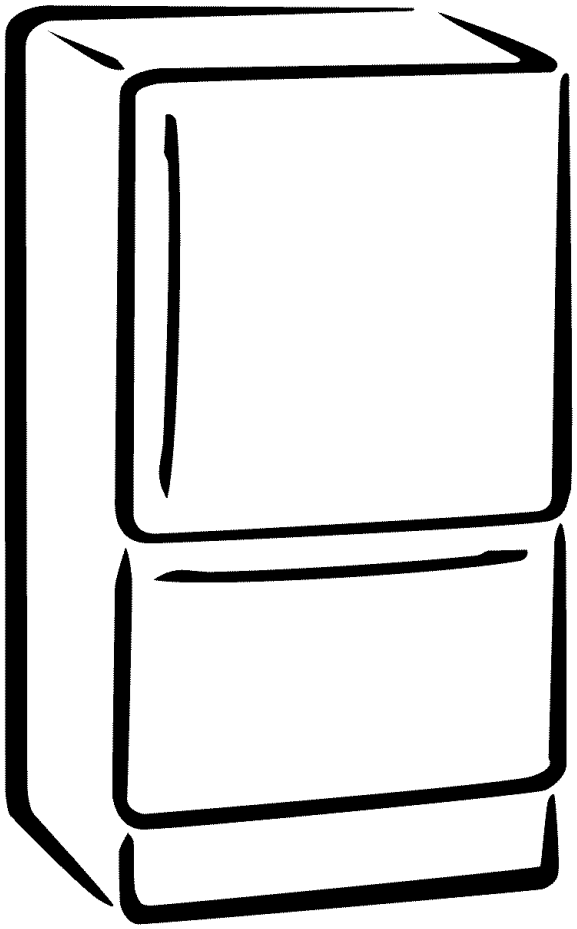

3828JL8024B
Printed in Mexico

Sears, Roebuck and Co., Hoffman Estates, IL 60179 U.S.A.

www.sears.com

TABLE OF CONTENTS

English Version 2

Warranty 2

Protection Agreements 3

Safety Instructions 4

Grounding Requirements 5

Parts and Features 6-7

Refrigerator Installation 8-15

- Unpacking Your Refrigerator 8
- Installation 8
- Base Grille 8
- Removing, Reversing and Replacing Your Refrigerator Doors 9-14
- Leveling and Door Alignment 15

Using Your Refrigerator 16-23

- Ensuring Proper Air Circulation 16
- Multi Flow 16
- Setting the Controls 16
- Adjusting Control Settings 17
- Food Storage Guide 17
- Storing Frozen Food 18
- Refrigerator Shelves 19
- Snack Pan 20
- Suprafresh Crispers with Tilt-out Compartment 20
- Crisper Humidity Control 20
- Crisper with Tilt-out Feature 20
- Crisper Cover with Lattice on inner Surface 21
- Door Racks 21
- Modular Door Bins 21
- Dairy Corner 22
- Tilt-Out Door Basket 22
- Ice Bin 22
- Durabase 22
- Wire Durabase 22
- Durabase Divider 23
- Drawer Tray 23
- Glide-Out Drawer Baskets 23

Care and Cleaning 24-25

- General Cleaning Tips 24
- Outside 24
- Inside Walls 24
- Door Liner and Gaskets 24
- Plastic Parts 24
- Condenser Coils 24
- Light Bulb Replacement 24-25
- Power Interruptions 25
- When you go on vacation 25

About the Automatic Icemaker 26

Connecting the Water Line 27-29

Troubleshooting Guide 30-33

Customer Service Back Cover

BOTTOM FREEZER REFRIGERATOR

KENMORE AND KENMORE ELITE REFRIGERATOR WARRANTY

ONE YEAR FULL WARRANTY ON REFRIGERATOR

For one year from the date of purchase, when this refrigerator is operated and maintained according to the instructions supplied with it, Sears will repair this refrigerator, free of charge, if defective in material or workmanship. This one year time period does not include the refrigerator water filter cartridge (if equipped), which is an expendable part warranted for only 30 days (see below).

FIVE YEAR FULL WARRANTY ON SEALED REFRIGERATION SYSTEM

For five years from the date of purchase, when this refrigerator is operated and maintained according to the instructions supplied with it, Sears will repair the sealed system (consisting of refrigerant, connecting tubing, and compressor), free of charge, if defective in material or workmanship.

30 DAY FULL WARRANTY ON WATER FILTER CARTRIDGE (if equipped)

For thirty days from the date of purchase, Sears will replace the refrigerator water filter cartridge if it is defective in material or workmanship.

All above warranty coverage applies only to refrigerators which are used for storage of food for private household purposes.

Warranty service is available in the United States or Canada by contacting Sears at 1-800-4-MY-HOME® (1-800-469-4663).

This warranty applies only while this product is in use in the United States or Canada.

This warranty gives you specific legal rights, and you may also have other rights which vary from state to state or province to province.

Sears, Roebuck and Co., Dept. 817WA, Hoffman Estates, IL 60179
Sears Canada, Inc., Toronto, Ontario, Canada M5B 2B8

PROTECTION AGREEMENTS

In the U.S.A.

Master Protection Agreements

Congratulations on making a smart purchase. Your new Kenmore® product is designed and manufactured for years of dependable operation. But like all products, it may require preventive maintenance or repair from time to time. That's when having a Master Protection Agreement can save you money and aggravation.

Purchase a Master Protection Agreement now and protect yourself from unexpected hassle and expense.

The Master Protection Agreement also helps extend the life of your new product. Here's what's included in the Agreement:

- ✔ **Expert service** by our 12,000 professional repair specialists
- ✔ **Unlimited service and no charge** for parts and labor on all covered repairs
- ✔ **"No-lemon" guarantee**—replacement of your covered product if four or more product failures occur within twelve months
- ✔ **Product replacement** if your covered product can't be fixed
- ✔ **Annual Preventive Maintenance Check** at your request—no extra charge
- ✔ **Fast help by phone**—phone support from a Sears technician on products requiring in-home repair, plus convenient repair scheduling
- ✔ **Power surge protection** against electrical damage due to power fluctuations
- ✔ **Rental reimbursement** if repair of your covered product takes longer than promised

Once you purchase the Agreement, a simple phone call is all that it takes for you to schedule service. You can call anytime day or night, or schedule a service appointment online.

Sears has over 12,000 professional repair specialists, who have access to over 4.5 million quality parts and accessories. That's the kind of professionalism you can count on to help prolong the life of your new purchase for years to come. Purchase your Master Protection Agreement today!

Some limitations and exclusions apply.

For prices and additional information call 1-800-827-6655.

Sears Installation Service

For Sears professional installation of home appliances, garage door openers, water heaters, and other major home items, in the U.S.A. call **1-800-4-MY-HOME.®**

In Canada

Maintenance Agreements

Your purchase has added value because you can depend on Sears HomeCentral® for service. With over 2400 Service Technicians and more than a million parts and accessories, we have the tools, parts, knowledge and skills to back our pledge: We Service What We Sell.

Your Kenmore® product is designed, manufactured and tested to provide years of dependable operation. But like all products, it may require service from time to time. The Sears Maintenance Agreement offers you an outstanding service program, affordably priced.

The Sears Maintenance Agreement:

- Is your way to buy tomorrow's service at today's price
- Eliminates repair bills resulting from normal wear and tear
- Provides phone support from a Sears technician on products requiring in-home repair
- Even if you don't need repairs, provides an annual Preventive Maintenance Check, at your request, to ensure that your product is proper running condition

Some limitations apply. For more information about Sears Canada Maintenance Agreements, call 1-800-361-6665

PRODUCT RECORD

In the space below, record the date of purchase, model and serial number of your product. You will find the model and serial number printed on an identification label located on the right-hand side of the refrigerator compartment. Have these items of information available whenever you contact Sears concerning your product.

Model No. _____ Date of Purchase _____

Serial No. _____ Dealer _____

Save these instructions and attach your sales receipt for future reference.

IMPORTANT SAFETY INSTRUCTIONS

SAFETY MESSAGES

This guide contains many important safety messages. Always **read and obey** all safety messages.

This is the safety alert symbol. It alerts you to safety messages that inform you of hazards that can kill or hurt you or others, or cause damage to the product.

All safety messages will be preceded by the safety alert symbol and the hazard signal word DANGER, WARNING, CAUTION. These words mean:

⚠ DANGER — You **will** be killed or seriously injured if you don't follow instructions.

⚠ WARNING — You **can** be killed or seriously injured if you don't follow instructions.

⚠ CAUTION — Indicates an imminently hazardous situation which, if not avoided, **may** result in minor or moderate injury, or product damage only.

All safety messages will identify the hazard, tell you how to reduce the chance of injury and tell you what can happen if the instructions are not followed.

⚠ WARNING

To reduce the risk of fire, electric shock, or injury to persons when using your product, basic safety precautions should be followed, including the following:

Read all instructions before using this appliance.

- NEVER unplug your refrigerator by pulling on the power cord. Always grip the plug firmly and pull it straight out from the outlet.
- Repair or replace immediately all electric service cords that have become frayed or otherwise damaged. Do not use a cord that shows cracks or abrasion damage along its length or at either the plug or connector end.
- When moving your refrigerator away from the wall, be careful not to roll over or damage the power cord.
- DO NOT store or use gasoline or other flammable vapors and liquids in the vicinity of this or any other appliance.
- DO NOT allow children to climb, stand or hang on the refrigerator doors or shelves in the refrigerator. They could damage the refrigerator and seriously injure themselves.
- Keep fingers out of *pinch point* areas; clearances between the doors and between the doors and cabinet are necessarily small. Be careful closing doors when children are in the area.
- Unplug your refrigerator before cleaning or making any repairs.
  NOTE: We strongly recommend that any servicing be performed by a qualified individual.
- Before replacing a burned-out light bulb, **unplug** the refrigerator or turn off power at the circuit breaker or fuse box in order to avoid contact with a live wire filament. (A burned-out light bulb may break when being replaced.)
- Do not store bottles in the freezer compartment, they may break when frozen, causing damage.

  NOTE: Setting either or both controls to the OFF position does not remove power to the light circuit.
- This refrigerator must be properly installed in accordance with the **Attention Installer Instructions** that were taped to the front of the refrigerator.
- After your refrigerator is in operation, do not touch the cold surfaces in the freezer compartment when hands are damp or wet. Skin may adhere to the extremely cold surfaces.
- In refrigerators with automatic icemakers, avoid contact with the moving parts of the ejector mechanism, or with the heating element that releases the cubes. DO NOT place fingers or hands on the automatic icemaking mechanism while the refrigerator is plugged in.
- DO NOT refreeze frozen foods which have thawed completely. The United States Department of Agriculture in Home and Garden Bulletin No. 69 says:

  ...You may safely refreeze frozen foods that have thawed if they still contain ice crystals or if they are still cold—below 40°F (4°C).

  ...Thawed ground meats, poultry or fish that have any off-odor or off-color should not be refrozen and should not be eaten. Thawed ice cream should be discarded. If the odor or color of any food is poor or questionable, get rid of it. The food may be dangerous to eat.

  Even partial thawing and refreezing reduces the eating quality of foods, particularly fruits, vegetables and prepared foods. The eating quality of red meats is affected less than that of many other foods. Use refrozen foods as soon as possible to save as much of their quality as you can.

SAVE THESE INSTRUCTIONS

⚠ DANGER: RISK OF CHILD ENTRAPMENT

Child entrapment and suffocation are not problems of the past. Junked or abandoned refrigerators are still dangerous...even if they will sit for *just a few days*. If you are getting rid of your old refrigerator, please follow the instructions at right to help prevent accidents.

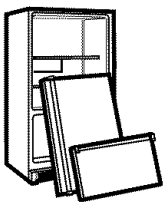

BEFORE YOU THROW AWAY YOUR OLD REFRIGERATOR OR FREEZER

- Take off the doors.
- Leave the shelves in place so that children may not easily climb inside.

CFC DISPOSAL

Your old refrigerator may have a cooling system that used CFCs (chlorofluorocarbons). CFCs are believed to harm stratospheric ozone.

If you are throwing away your old refrigerator, make sure the CFC refrigerant is removed for proper disposal by a qualified servicer. If you intentionally release this CFC refrigerant, you can be subject to fines and imprisonment under provisions of environmental legislation.

GROUNDING REQUIREMENTS

IMPORTANT: Please read carefully.

TO CONNECT ELECTRICITY

⚠ WARNING

Electrical Shock Hazard

FOR PERSONAL SAFETY, this appliance must be properly grounded. Have the wall outlet and the circuit checked by a qualified electrician to make sure the outlet is properly grounded.

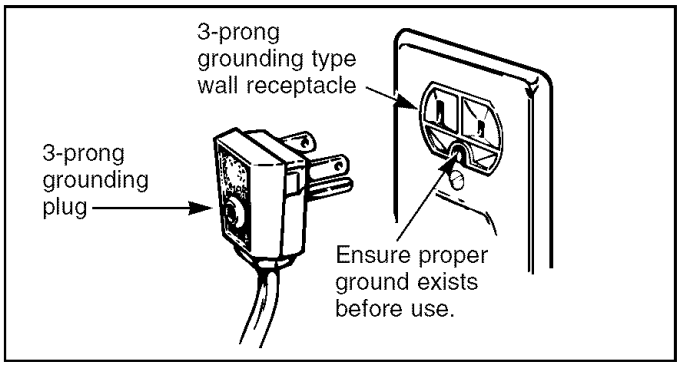

RECOMMENDED GROUNDING METHOD

The refrigerator should always be plugged into its own individual properly grounded electrical outlet rated for 115 Volts, 60 Hz, AC only, and fused at 15 or 20 amperes. This provides the best performance and also prevents overloading house wiring circuits which could cause a fire hazard from overheated wires. It is recommended that a separate circuit serving only this appliance be provided. Use a receptacle which cannot be turned off with a switch or pull chain. Do not use an extension cord.

Where a standard two-prong wall outlet is encountered, it is your personal responsibility and obligation to have it replaced with a properly grounded three-prong wall outlet.

Do not, under any circumstances, cut or remove the third (ground) prong from the power cord.

NOTE: Before performing any type of installation, cleaning, or removing a light bulb, turn the control (Thermostat, Refrigerator Control or Freezer Control, depending on the model) to OFF and then disconnect the refrigerator from the electrical source. When you are finished, reconnect the refrigerator to the electrical source and reset the control (Thermostat, Refrigerator Control or Freezer Control, depending on the model) to the desired setting.

USE OF EXTENSION CORDS

Because of potential safety hazards under certain conditions, we strongly recommend against the use of an extension cord. However, if you still elect to use an extension cord, it is absolutely necessary that it be a UL-listed (USA), 3-wire grounding type appliance extension cord having a grounding type plug and outlet, and that the electrical rating of the cord be 15 amperes (minimum) and 120 volts.

Use of an extension cord will increase the clearance needed for the back of the refrigerator.

▶ Freezer Drawer Model

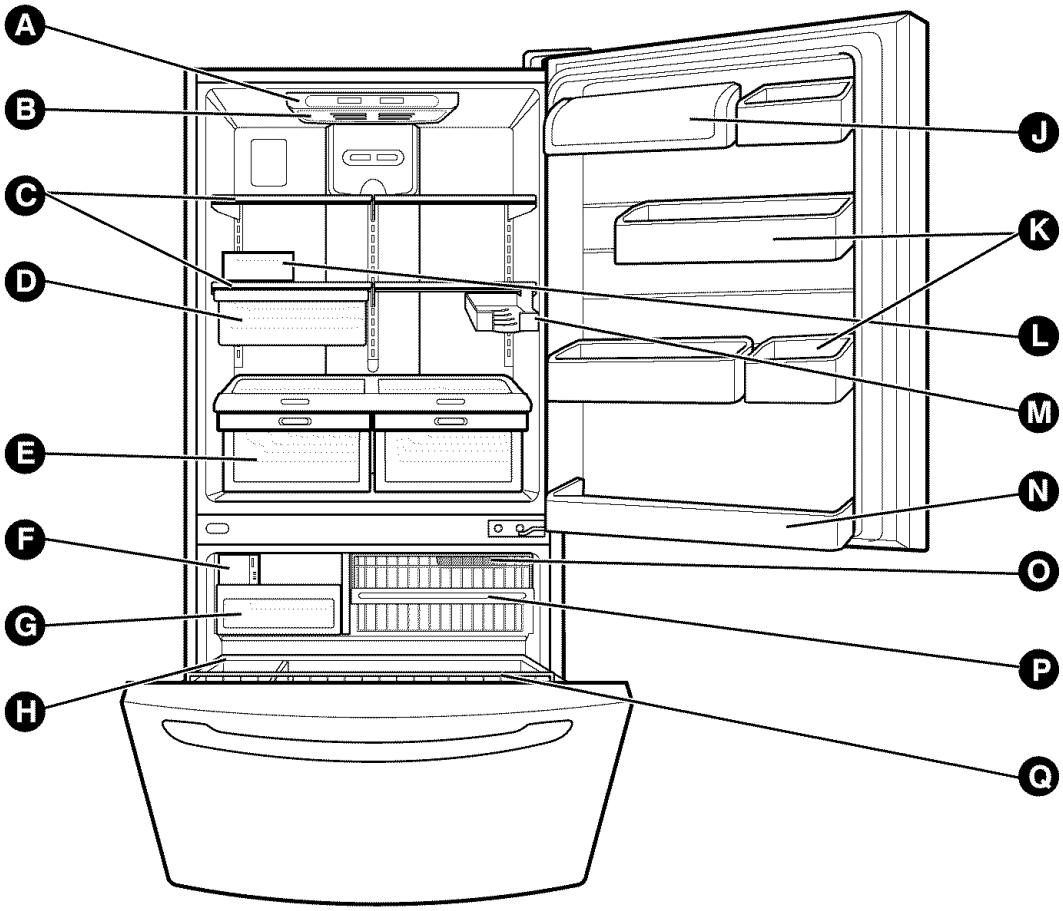

Use this section to become more familiar with the parts and features. Page references are included for your convenience.

NOTE: This guide covers several different models.The refrigerator you have purchased may have some or all of the items listed below. The locations of the features shown below may not match your model.

- **A** Cool Sense Electronic Temperature Control System (p.16)
- **B** Refrigerator Light (p.24)
- **C** Refrigerator Shelves (p.19)
- **D** Snack Pan (p.20)
- **E** Supra Fresh Crisper with Tilt-Out Compartment (p.20)
- **F** Adjusta Cube Ice Maker (p.26)
- **G** Ice Bin (p.22)
- **H** Durabase (p.22)
- **I** Divider (p.23)
- **J** Dairy Corner (p.22)
- **K** Modular Door Bins (p.21)
- **L** Egg Box (Freezer Drawer Model Only)
- **M** Wine Rack
- **N** Refrigerator Door Rack (p.21)
- **O** Freezer Light (p.25)
- **P** Glide-Out Drawer Basket (p.23)
- **Q** Tilt-Out Door Basket (p.22)

▶ Swing Out Freezer Door Model

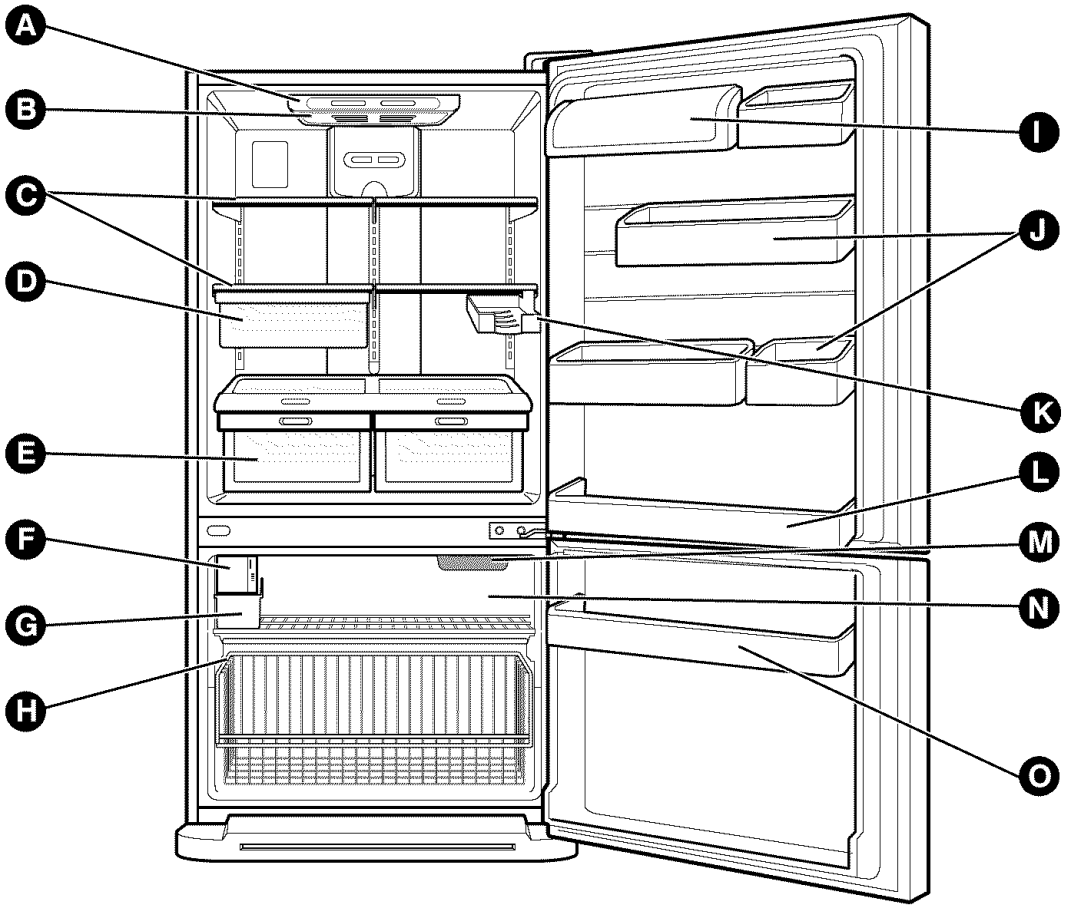

Use this section to become more familiar with the parts and features. Page references are included for your convenience.

NOTE: This guide covers several different models.The refrigerator you have purchased may have some or all of the items listed below. The locations of the features shown below may not match your model.

- **A** Cool Sense Electronic Temperature Control System (p. 16)
- **B** Refrigerator Light (p. 24)
- **C** Refrigerator Shelves (p. 19)
- **D** Snack Pan (p. 20)
- **E** Supra Fresh Crisper with Tilt-Out Compartment (p. 20)
- **F** Adjusta Cube Ice Maker (p. 26)
- **G** Ice Bin (p. 22)
- **H** Wire Durabase (p. 22)
- **I** Dairy Corner (p. 22)
- **J** Modular Door Bins (p. 21)
- **K** Wine Rack
- **L** Refrigerator Door Rack (p. 21)
- **M** Freezer Light (p. 25)
- **N** Glide-Out Drawer Basket (p. 23)
- **O** Freezer Door Rack

⚠ WARNING

Excessive Weight Hazard

Use two or more people to move and install refrigerator.

Failure to do so can result in back or other injury.

UNPACKING YOUR REFRIGERATOR

Remove tape and any temporary labels from your refrigerator before using. Do not remove any warning-type labels, the model and serial number label, or the TechSheet that is attached to bottom wall of the refrigerator.

To remove any remaining tape or glue, rub the area briskly with your thumb. Tape or glue residue can also be easily removed by rubbing a small amount of liquid dish soap over the adhesive with your fingers. Wipe with warm water and dry.

Do not use sharp instruments, rubbing alcohol, flammable fluids or abrasive cleaners to remove tape or glue. These products can damage the surface of your refrigerator. For more information, see the **Important Safety Instructions** section.

Refrigerator shelves are installed in the shipping position.

Please reinstall shelves according to your individual storage needs.

When Moving Your Refrigerator:

Your refrigerator is heavy. When moving the refrigerator for cleaning or service, be sure to protect the floor. Always pull the refrigerator straight out when moving it. Do not wiggle or walk the refrigerator when trying to move it, as floor damage could occur.

⚠ WARNING

Explosion Hazard

Keep flammable materials and vapors, such as gasoline, away from refrigerator.

Failure to do so can result in death, explosion or fire.

INSTALLATION

1. Avoid placing the unit near heat sources, direct sunlight or moisture.
2. To avoid vibration, the unit must be level. If required, adjust the leveling screws to compensate for unevenness of the floor. The front should be slightly higher than the rear to aid in door closing. Leveling screws can be turned easily by tipping the cabinet slightly. Turn the leveling screws clockwise ( ) to raise the unit, counterclockwise ( ) to lower it.
3. Install this appliance in an area where the temperature is between 55°F (13°C) and 110°F (43°C.) If the temperature around the appliance is too low or high, cooling ability may be adversely affected.

NEXT

1. Clean your refrigerator thoroughly and wipe off all dust accumulated during shipping.
2. Install accessories such as ice cube bin, drawers, shelves, etc., in their proper places. They are packed together to prevent possible damage during shipment.
3. Let your refrigerator run for 2 or 3 hours before putting food in it. Check the flow of cold air in the freezer compartment to ensure proper cooling. Your refrigerator is now ready for use.

CAUTION:

- Be careful when you work with hinge, base grille, stopper etc. You may be injured.
- Do not put hands or metal sticks into air vents, base grille or bottom of refrigerator. You may be injured or receive an electrical shock.

BASE GRILLE

To remove the base grille:

1. Open the refrigerator door.
2. Grasp the grille with both hands.
3. Pull the grille toward yourself.

To install the base grille:

1. Open the refrigerator door.
2. Place clips in openings in the metal panel.
3. Push the grille toward the refrigerator until it snaps into place.

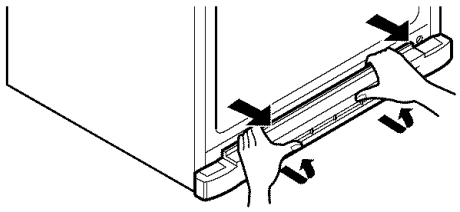

▶ For drawer type models

REMOVING, REVERSING AND REPLACING REFRIGERATOR DOORS

TOOLS NEEDED: 10mm hex-head socket wrench, No. 2 Phillips screwdriver, flat tip screwdriver, 10mm open-end wrench, flat 2-inch putty knife.

IMPORTANT: Before you begin, turn the refrigerator OFF and unplug it. Remove food and any adjustable door or utility bins from doors.

HOW TO REVERSE DOOR OPENING DIRECTION (when converting from the left-opening type to right-opening type)

1. Removing Refrigerator Door

- Remove the top hinge cover (1).
- Remove the 3 screws and lift off the top hinge (2).
- Lift the Refrigerator door (3) slightly and remove it.
- Use a flat tip screwdriver to pry off top hole cover (4) and attach it on the right.
- Loosen the screw (5), remove the stoppers (6), and attach them on the left (on the opposite side).
- Loosen the pin (8) and remove it.
- Loosen the 2 screws (9) and the 2 screws (10), and lift off the middle hinge (11).
- Use a flat tip screwdriver to pry off bottom hole cover (7) and attach it on the right.

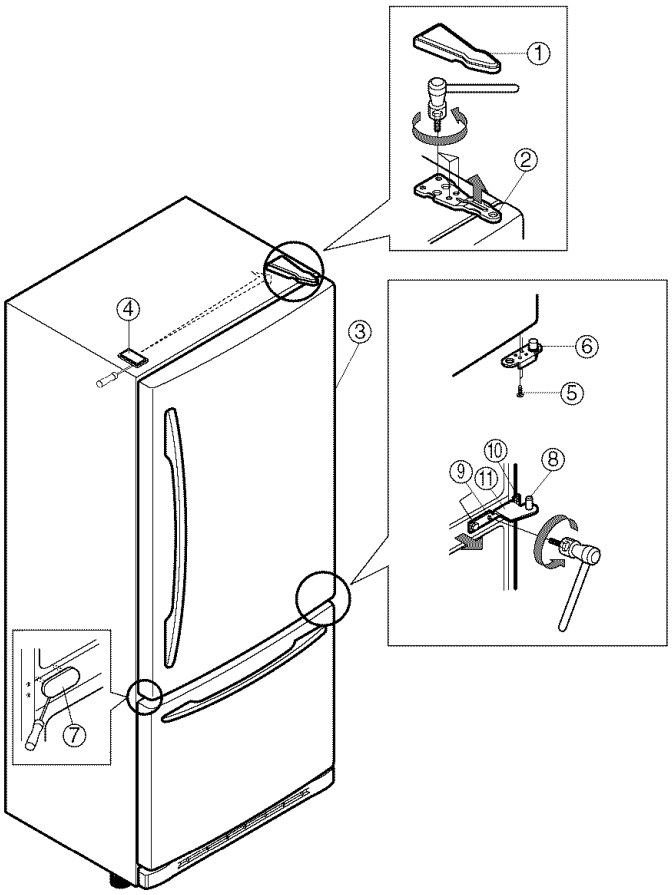

2. Removing Refrigerator Handle

NOTE: To assist in installing the handle on the right side, place a small piece of masking tape near the top of the handle before removing.

- Grasp the handle tightly with both hands and slide the handle up (1)(this may require some force).
- The keyhole slots (2) on the back of the handle allow the handle to separate from the mounting screws (3).
- Use an adjustable wrench to remove the handle mounting screws (3).
- Carefully pry off the plug buttons (4).
- Remove a layer of adhesive and backing to expose new adhesive.
- Install the plug buttons (4) on left side.
- Install the handle mounting screw (3) on the right side
- Hold the handle so the masking tape is at the bottom.
- Align keyhole slots (2) on the top and bottom of the back of the handle with the screws (3) mounted on the front of the door.
- Press the handle against the door front, making sure that the screws (3) go into the keyhole slots (2).
- Grasping the handle with both hands, press it firmly against the front of the door and slide the handle down (6). This may require some force.

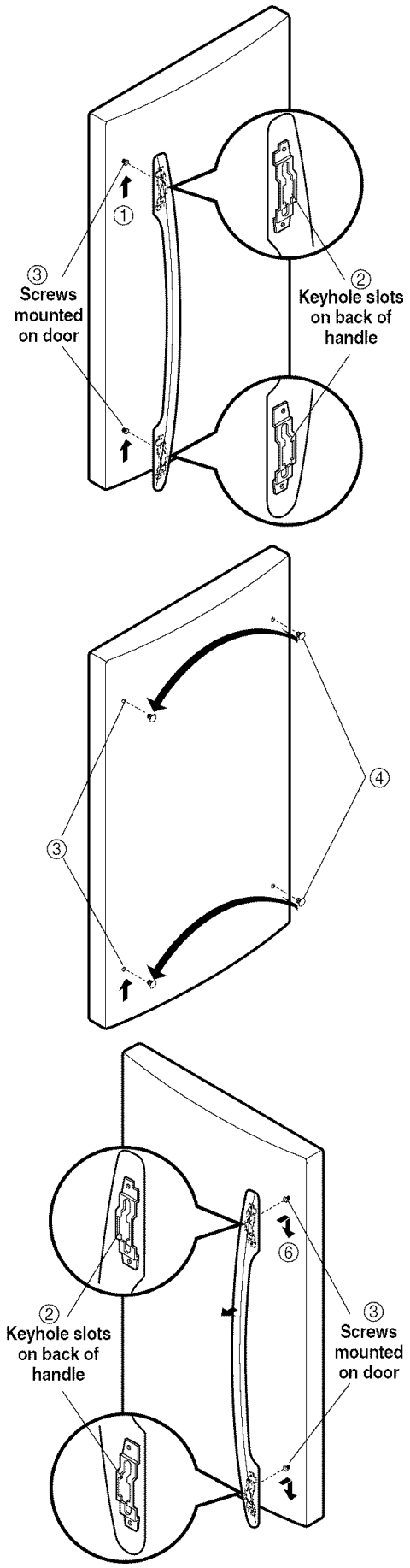

3. Installing Refrigerator Door

- Install the middle hinge (1) on the opposite side with the screws (2), and the screw (3).
- Install the door (4) so that it fits onto the middle hinge pin (5).
- Install the top hinge (6) with screws.
- Reinstall top hinge cover (7).

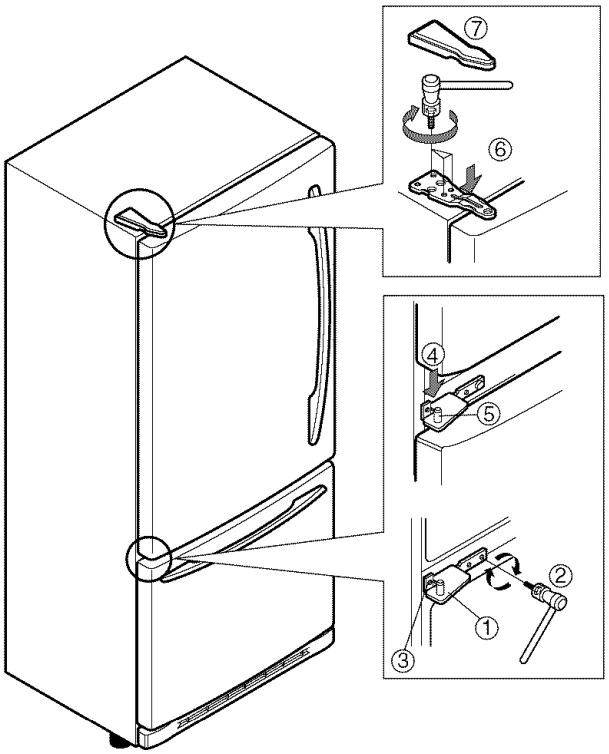

4. After Completing the Job

- Make sure that each at the four corners of the door gasket is not folded over on itself. To ensure a good seal, apply a small amount of silicon grease on the gasket.

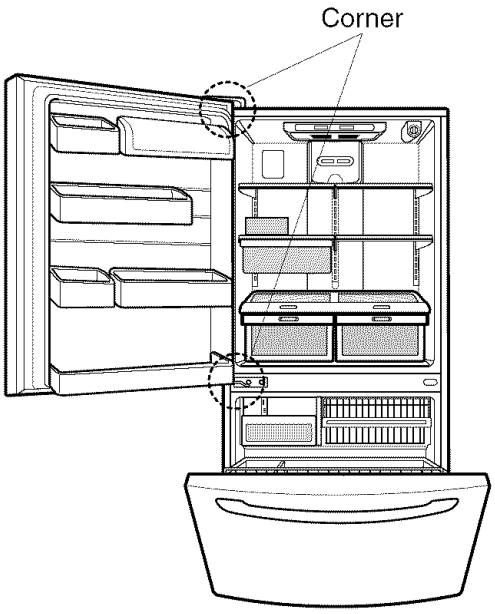

HOW TO REMOVE AND INSTALL THE PULLOUT DRAWER

IMPORTANT: To avoid possible injury, product or property damage, you will need two people to perform the following instructions.

1. Removing Pullout Drawer

- Pull the drawer open to full extension. Remove the screw (1) from each side of rail system.

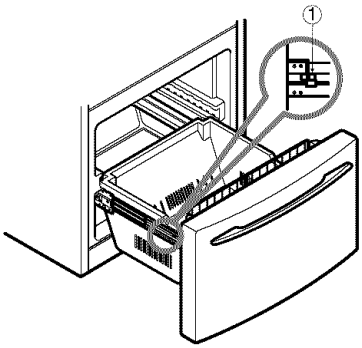

- Remove the lower basket (2) by lifting basket from rail system.

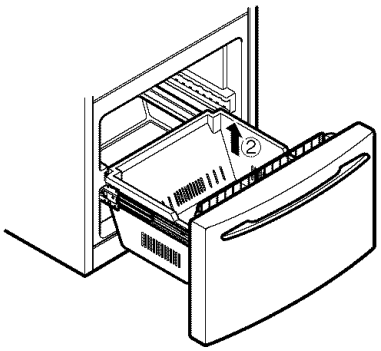

- Lift the top of door to unhook door supports from rail system. Lift door up to remove.

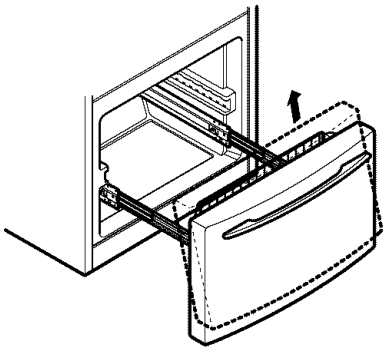

2. Installing Pullout Drawer

- Pull both rail (1) out to full extension.

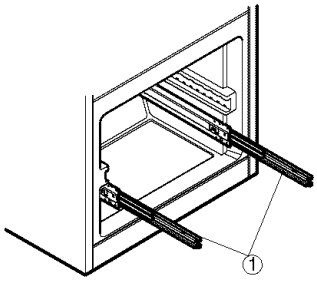

- Hook the door supports (2) into the rail tabs (3), as illustrated, and lower door into final position.

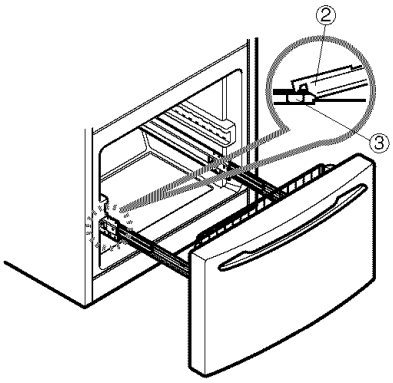

- With the drawer pulled out to full extension, insert the lower basket (4) in rail assembly.

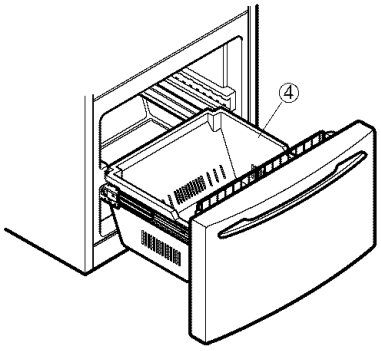

⚠ **WARNING:** To prevent accidental child and pet entrapment or suffocation risk, DO NOT allow them to play inside of drawer.

⚠ **WARNING:** DO NOT step or sit down on Freezer Door.

▶ For swing type models

REMOVING, REVERSING AND REPLACING REFRIGERATOR DOORS

TOOLS NEEDED: 10mm hex-head socket wrench, No. 2 Phillips screwdriver, flat tip screwdriver, 10mm open-end wrench, flat 2-inch putty knife.

IMPORTANT: Before you begin, turn the refrigerator OFF and unplug it. Remove food and any adjustable door or utility bins from doors.

HOW TO REVERSE DOOR OPENING DIRECTION (when converting from the left-opening type to right-opening type)

1. Removing Refrigerator Door

- Remove the top hinge cover (1).
- Remove the 3 screws and lift off the top hinge (2).
- Lift the Refrigerator door (3) slightly and remove it.
- Use a flat tip screwdriver to pry off the top hole cover (4) and attach it on the right.
- Loosen the screw (5), remove the stopper (6) and attach them on the left (on the opposite side).
- Loosen the pin (8) and remove it.
- Lift off the washer (9).
- Use a flat tip screwdriver to pry off the bottom hole cover (7) and attach it on the right.

2. Removing Freezer Door

- Lift the door (10) slightly and remove it.
- Loosen the 2 screws (11), the 2 screws (12), and lift off the middle hinge (13).
- Take off the base grille (14).
- Loosen the 2 screws (16), remove the bottom hinge (17), and attach on the right.
- Loosen the 2 screws (18), remove the bottom hinge (19), and attach on the left.
- Loosen the 2 screws (20) and attach the stopper (21) on the left side of the base.

3. Removing Refrigerator Handle

- Refer to page 10.

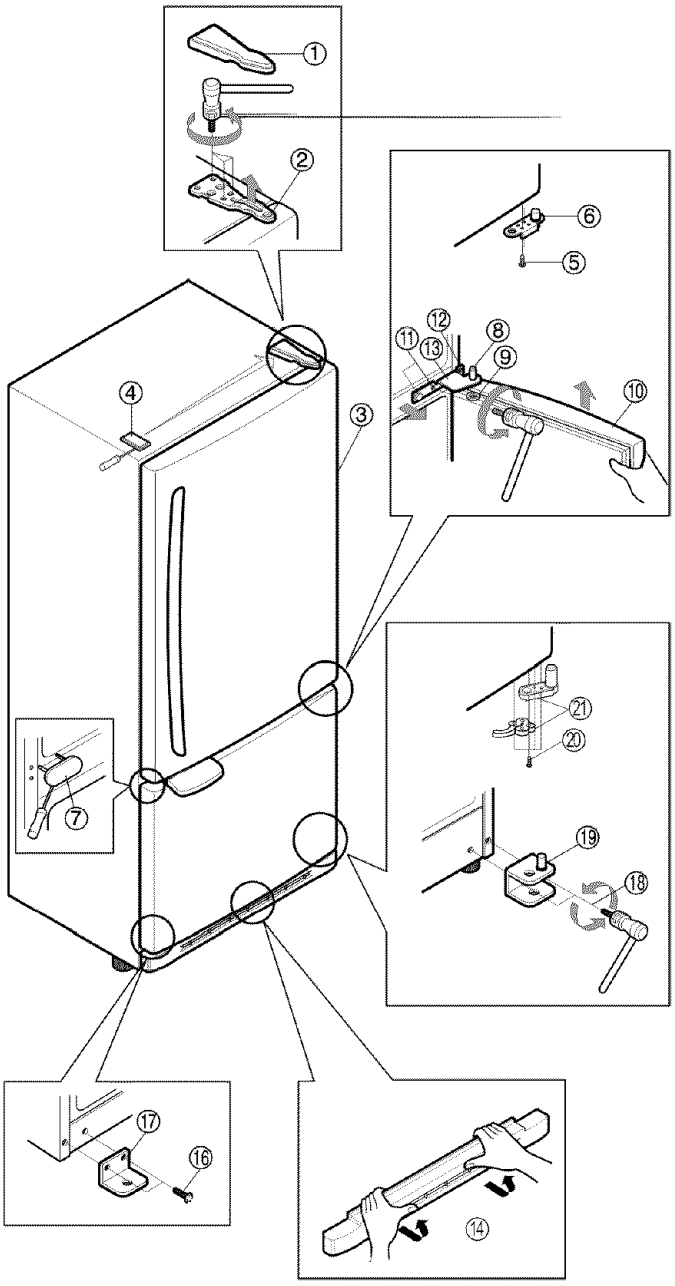

4. Removing and Attaching Freezer Handle

- Remove the cap (1) and the 2 caps (2) using a flat tip screwdriver.
- Loosen the 2 screws (3), take off the handle (4), and install it on the right.
- Attach the caps, (1) and (2) you removed earlier.

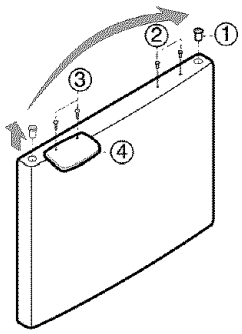

5. Installing Freezer Door

- Install the base grille (1).
- Install the door (3) onto the bottom hinge pin.
- Install the middle hinge (4) on the opposite side with screws (5) and (9).

6. Installing Refrigerator Door

- Place the washer (6) on the middle hinge pin (7).
- Install the door (8) so that it fits onto the middle hinge pin (7).
- Install the top hinge (10) with screws.
- Reinstall top hinge cover (11).

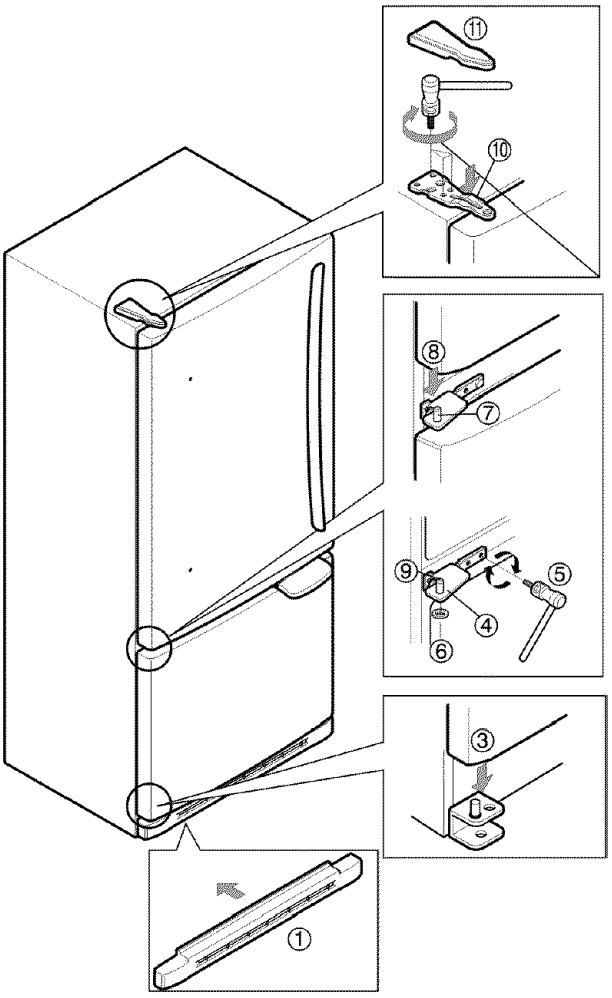

7. After Completing the Job

- Make sure that each at the four corners of the door gasket is not folded over on itself. To ensure a good seal, apply a small amount of silicon grease on the gasket.

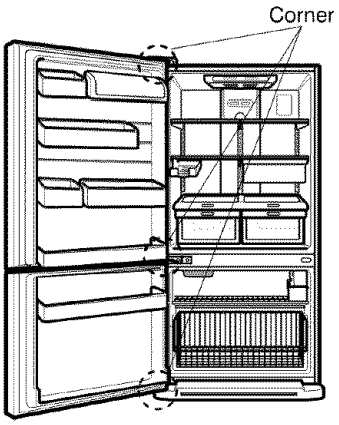

LEVELING AND DOOR ALIGNMENT

Door Closing

Your refrigerator has two front leveling screws—one on the right and one on the left. If your refrigerator seems unsteady or you want the doors to close easier, adjust the refrigerator's tilt using the instructions below:

1. Plug refrigerator power cord into a 3-prong grounded outlet. Move the refrigerator into its final position.
2. Use a screwdriver to adjust the leveling screws. Turn the leveling screw clockwise to raise that side of the refrigerator or counterclockwise to lower it. It may take several turns of the leveling screw to adjust the tilt of the refrigerator.

   NOTE: Having someone push against the top of the refrigerator takes some weight off the leveling screws. This makes it easier to adjust the screws.

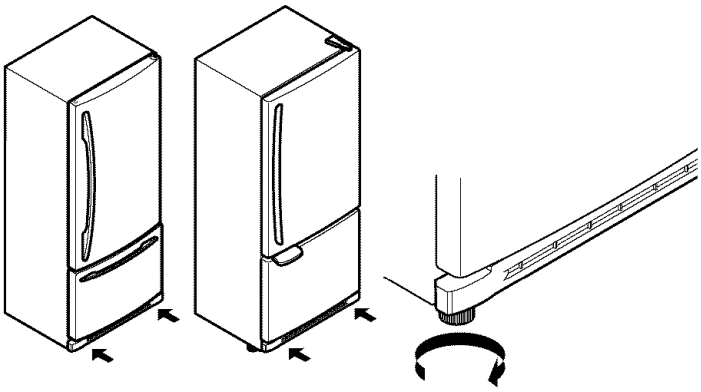

3. Open both doors again and check to make sure that they close easily. If not, tilt the refrigerator slightly more to the rear by turning both leveling screws clockwise. It may take several more turns, and you should turn both leveling screws the same amount.
4. Re-adjust if necessary.
5. Replace the base grille.

Door Alignment

If the space between your doors is uneven, follow the instructions below to align the doors:

1. Pry off the top hinge cover.
2. Loosen the top hinge screws using a 10mm socket or wrench.
3. Have someone hold the door in place with space between doors even, or put a spacer between doors to keep space even, while you tighten the top hinge screws.
4. Replace the top hinge cover.

ENSURING PROPER AIR CIRCULATION

In order to ensure proper temperatures, air must flow between the refrigerator and freezer sections. As shown in the illustration below, air enters at top of freezer and circulates down. From bottom of freezer, air is forced up to top of refrigerator. Air enters refrigerator through top vent, then circulates and exists at bottom, where it returns to freezer.

MULTI-FLOW

- Multi-Flow means powerful and effective cooling operation. This is especially noticeable when new food is placed in the refrigerator compartment.
- If water or foreign substances enter the cool air vent while cleaning, efficiency will be lowered. In addition, if gasket is damaged, efficiency may be lowered because of escaping cool air.

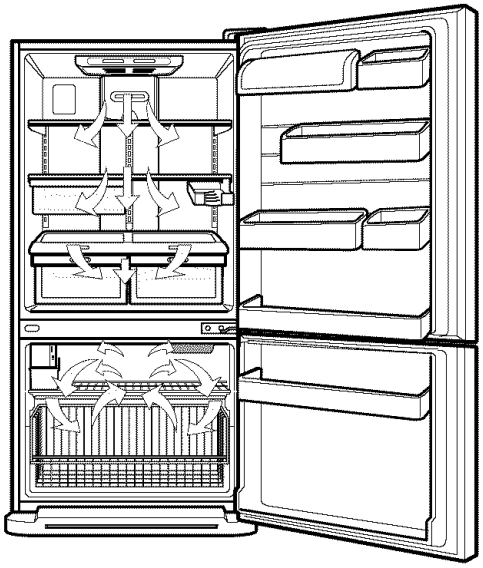

Do not block any of cool air vents with food packages. If the vents are blocked, airflow will be interrupted and temperature and moisture problems may occur.

IMPORTANT: Because air circulates between both sections, any odors formed in one section will transfer to the other. You must thoroughly clean both sections to eliminate odors. To prevent odor transfer and drying out of food, wrap or cover foods tightly. (See the Food Storage Guide section for details.)

SETTING THE CONTROLS

- Your refrigerator has two controls that let you regulate the temperature in the freezer and refrigerator compartments.
- Initially set the REFRIGERATOR CONTROL at 37 °F (3°C) and the FREEZER CONTROL at 0°F (- 18°C). Leave it at this setting for 24 hours (one day) to stabilize. Then adjust the compartment temperature as desired.
- **Refrigerator control: Position 1 to 7 (32°F to 47°F / 0°C to 8°C)**
  The higher the number setting, the colder the refrigerator compartment will become.

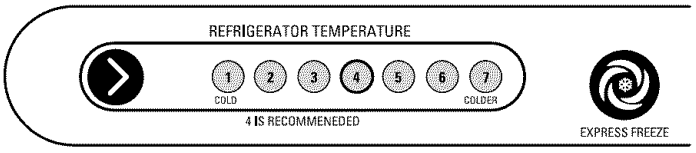

- **Freezer control: Position 1 to 7 (-6°F to 8 °F / - 21°C to - 13°C)**
  When the setting is at a higher number, the freezer compartment becomes colder. But the refrigerator compartment becomes warmer because less cold air flows into the refrigerator.
- **Express Freezing**
  Press the Express Freezing key and the LED will turn on. This function will remain activated for 24 hours and intensify the cooling speed of freezer and increase the amount office.

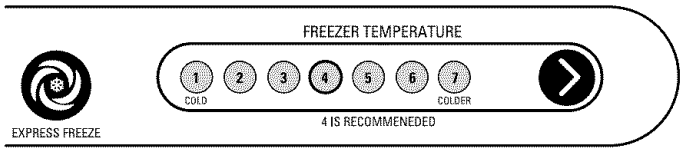

ADJUSTING CONTROL SETTINGS

Give the refrigerator time to cool down completely before adding food. It is best to wait 24 hours before you put food into the refrigerator. The mid-settings indicated in the previous section should be correct for normal household refrigerator usage. The controls are set correctly when milk or juice is as cold as you like and when ice cream is firm.

The refrigerator control functions as the thermostat for the entire appliance (refrigerator and freezer sections.) The higher the number setting, the longer the compressor will run to keep the temperature colder. The freezer control adjusts the cold air flow from the freezer to the refrigerator. Setting the freezer control to a lower temperature keeps more cold air in the Freezer compartment to make it colder.

If you need to adjust temperatures in the refrigerator or freezer, start by adjusting the refrigerator first. Wait 24 hours after the refrigerator adjustment to check the freezer temperature. If it is too warm or too cold, then adjust the freezer control as well.

Use the settings listed in the chart below as a guide. **Always remember to wait at least 24 hours between adjustments.**

CONDITION/REASON:	RECOMMENDED ADJUSTMENT:
REFRIGERATOR section too warm • Door opened often • Large amount of food added • Room temperature very warm	**Turn REFRIGERATOR control to next higher number, wait 24 hours, then re-check**
FREEZER section too warm/ ice not made fast enough • Door opened often • Large amount of food added • Very cold room temperature (can't cycle often enough) • Heavy ice usage	**Turn FREEZER control to next higher number, wait 24 hours, then re-check**
• Air vents blocked by items	**Move items out of airstream**
REFRIGERATOR section too cold • Controls not set correctly for your conditions	**Turn REFRIGERATOR control to next lower number, wait 24 hours, then re-check**
FREEZER section too cold • Controls not set correctly for your conditions	**Turn FREEZER control to next lower number, wait 24 hours, then re-check**

FOOD STORAGE GUIDE

Storing Fresh Food

Wrap or store food in the refrigerator in airtight and moisture-proof material unless otherwise noted. This prevents food odor and taste transfer throughout the refrigerator. For dated products, check date code to ensure freshness.

Butter or margarine

Keep opened butter in a covered dish or closed compartment. When storing an extra supply, wrap in freezer packaging and freeze.

Cheese

Store in the original wrapping until you are ready to use it. Once opened, rewrap tightly in plastic wrap or aluminum foil.

Milk

Wipe milk cartons. For best storage, place milk on interior shelf, not on door shelf.

Eggs

Store in original carton on interior shelf, not on door shelf.

Fruit

Wash, let dry, and store in refrigerator in plastic bags or in the crisper. Do not wash or hull berries until you are ready to use them. Sort and keep berries in their original container in a crisper, or store in a sloosely closed paper bag on a refrigerator shelf.

Leafy vegetables

Remove store wrapping and trim or tear off bruised and discolored areas. Wash in cold water and drain. Place in plastic bag or plastic container and store in crisper.

Vegetables with skins (carrots, peppers)

Place in plastic bags or plastic container and store in crisper.

Fish

Use fresh fish and shellfish the same day purchased.

Snack pan

Store most snacks in original wrapping as long as it is airtight and moisture-proof. Rewrap if necessary.

Leftovers

Cover leftovers with plastic wrap or aluminum foil. Plastic containers with tight lids can also be used.

STORING FROZEN FOOD

NOTE: For further information about preparing food for freezing or food storage times, check a freezer guide or a reliable cookbook.

Packaging

Successful freezing depends on correct packaging. When you close and seal the package, it must not allow air or moisture in or out. If it does, you could have food odor and taste transfer throughout the refrigerator and also dry out frozen food.

Packaging recommendations:

- Rigid plastic containers with tight-fitting lids
- Straight-sided canning/freezing jars
- Heavy-duty aluminum foil
- Plastic-coated paper
- Non-permeable plastic wraps
- Specified freezer-grade self-sealing plastic bags

Follow package or container instructions for proper freezing methods.

Do not use:

- Bread wrappers
- Non-polyethylene plastic containers
- Containers without tight lids
- Wax paper or wax-coated freezer wrap
- Thin, semi-permeable wrap

Freezing

IMPORTANT: Do not store bottles in the freezer compartment - they may break when frozen, causing damage.

Your freezer will not quick-freeze any large quantity of food. Do not put more unfrozen food into the freezer than will freeze within 24 hours (no more than 2 to 3 lbs of food per cubic foot of freezer space). Leave enough space in the freezer for air to circulate around packages. Be careful to leave enough room at
the front so the door can close tightly.

Storage times will vary according to the quality and type of food, the type of packaging or wrap used (airtight and moisture-proof) and the storage temperature. Ice crystals inside a sealed package are normal. This simply means that moisture in the food and air inside the package have condensed, creating ice crystals.

NOTE: Allow hot foods to cool at room temperature for 30 minutes, then package and freeze. Cooling hot foods before freezing saves energy.

REFRIGERATOR SECTION

REFRIGERATOR SHELVES

The shelves in your refrigerator are adjustable to meet your individual storage needs. Your model may have glass or wire shelves.

Storing similar food items together in your refrigerator and adjusting the shelves to fit different heights of items will make finding the exact item you want easier; it will also reduce the amount of time the refrigerator door is open, saving energy.

IMPORTANT: Do not clean glass shelves with warm water when they are cold. Shelves may break if exposed to sudden temperature changes or impact, such as bumping. For your protection, glass shelves are made with tempered glass, which will shatter into small pebble-sized pieces.

NOTE: Glass shelves are heavy. Use special care when removing them to avoid dropping them.

Adjusting Shelves

Remove shelves from the shipping position and replace shelves in the position you want.

- **To remove a shelf**—Tilt up the front of the shelf in the direction of (1) and lift it in the direction of (2). Pull the shelf out.

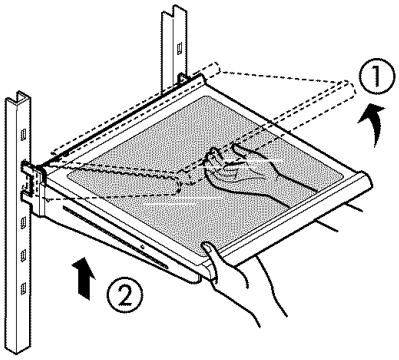

- **To replace a shelf**—Tilt the front of the shelf up and guide the shelf hooks into the slots at a desired height. Then lower the front of the shelf so that the hooks drop into the slots.

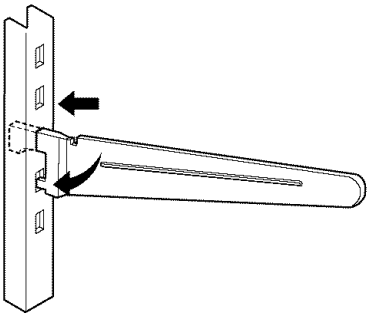

NOTE: Make sure that shelves are level from one side to the other. Failure to do so may result in the shelf falling or spilling food.

SNACK PAN

While holding the snack pan with one hand, pull it forward slightly. Lift slightly and pull it out.

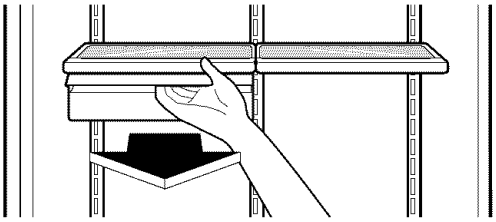

SUPRAFRESH CRISPERS WITH TILT-OUT COMPARTMENT

Crispers with Tilt-Out Compartment

The crispers provide fresher-tasting fruit and vegetables by letting you easily control humidity inside the drawer. The crispers include:

1. A crisper drawer humidity control switch.
2. A lattice on the underside of the cover to efficiently hold or release moisture.
3. A tilt-out compartment on the front of the crisper drawer.

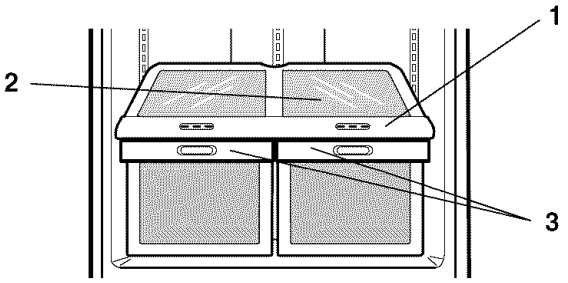

CRISPER HUMIDITY CONTROL

You can control the amount of humidity in the moisture-sealed crispers. Adjust the control to any setting between ● and 🍃.

- ● lets moist air out of the crisper for best storage of fruits.
- 🍃 keeps moist air in the crisper for best storage of fresh, leafy vegetables.

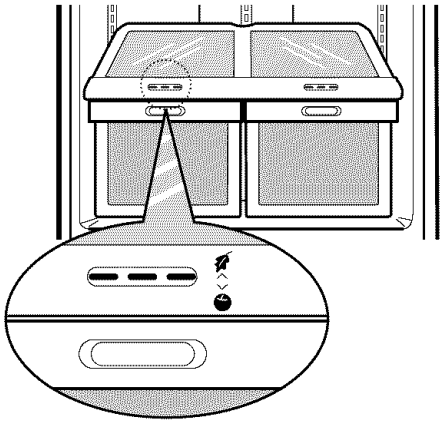

CRISPER WITH TILT-OUT FEATURE

Tilt-Out Compartment

The tilt-out compartment on the front of the crisper is for items stored best in low humidity such as apples and oranges. The front of the compartment is transparent to allow you to see compartment contents. Push the button on the front of the compartment to open it.

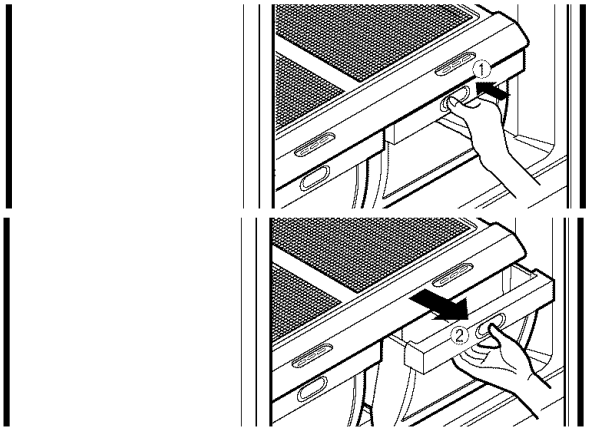

To remove tilt-out compartment:

1. Pull crisper drawer out to the stop.
2. Open the compartment.
3. Grasp side of drawer and pull outward to release tab at compartment base. Pull compartment toward you to remove.
4. To replace compartment, insert compartment base tab into one side of drawer. Pull slightly outward on opposite side of drawer to insert other base tab.

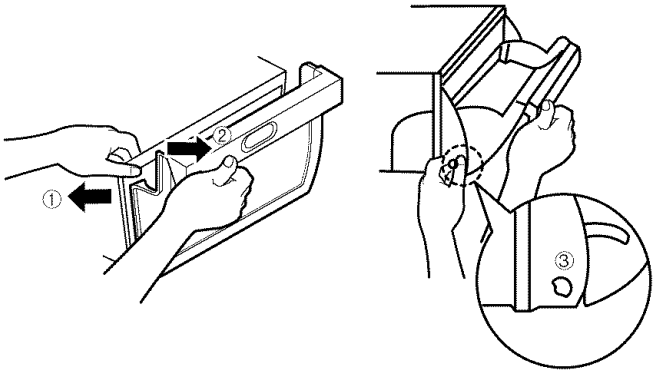

Removing Crisper

To remove crisper drawer:

1. Slide drawer straight out to the stop.
2. Lift the front of the drawer, then pull it out to remove.
3. Replace the drawer by sliding it back in fully past the drawer stop.

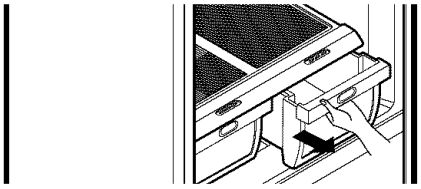

CRISPER COVER WITH LATTICE ON INNER SURFACE

To remove cover frame:

1. Remove both crisper drawers.
2. Remove glass cover from frame. Set safely aside for rest of crisper removal procedure.
3. While holding crisper cover frame support, pull the frame up and out.

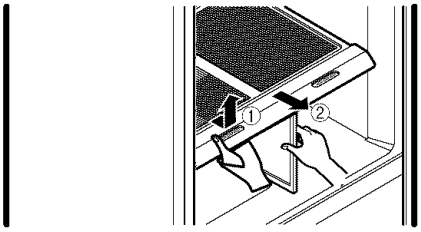

WARNING: Be careful when handling glass cover since glass is not attached to cover.

To remove lattice:

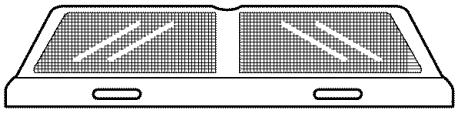

1. Be sure glass cover is removed.
2. Turn the cover frame over. Each lattice has its own frame within the cover frame.
3. Pull left and right sides of lattice frame outward to release lattice tabs from frame. Remove lattice.

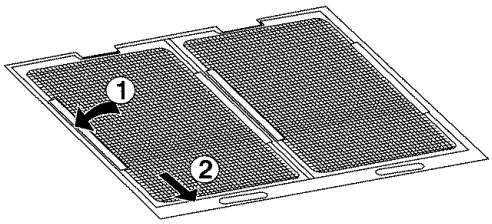

To replace lattice:

1. Pull sides of each lattice frame outward to re-insert tabs of lattice into frame.
2. Slide the cover frame back into refrigerator and securely onto frame support.
3. Place the glass cover back onto top of cover frame.

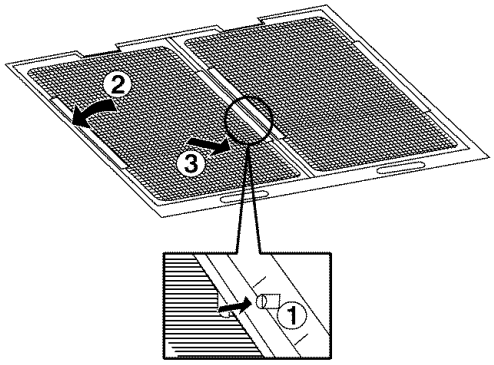

DOOR RACKS

The door racks may be removed for easier cleaning.

Snap-on Door Racks

To remove the racks:

1. Remove all items in the door racks.
2. Push the rack against the inside wall of the door (A) and lift up the door rack (B).

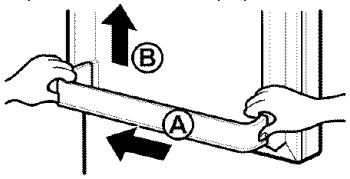

To replace the racks:

1. Hold either end of the do or rack against the inside wall of the d oor.
2. Push down the rack until it locks in place.

MODULAR DOOR BINS

1. Bins can be moved to either side of the door.

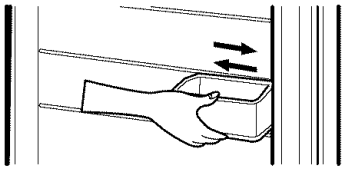

2. **To remove the bin**simply lift the bin up and pull straight out.

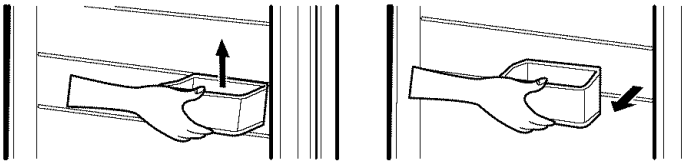

3. **To replace the bin,** slide it in above the desired support button and push down until it snaps into place.

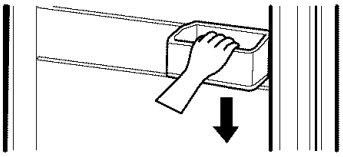

4. **When moving bins,** make sure that bins are correctly inserted so that they don't fall out of door.

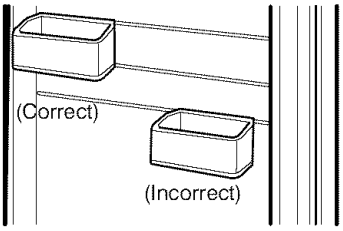

⚠**WARNING:** Somebody can be hurt if door bins are not firmly assembled.

NOTE: Do not adjust a bin that is loaded with food.

⚠**CAUTION:** DO NOT allow children to play with baskets. The pointed area of basket could injure them.

DAIRY CORNER

1. **To remove the dairy Bin**, simply lift it and pull straight out.
2. **To replace the dairy Bin,** slide it in above the desired location and push down until it stops.

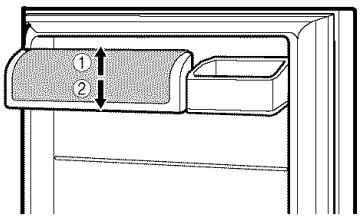

FREEZER SECTION

TILT-OUT DOOR BASKET

Tilt-out Door Basket (on some models)

You can remove foods easily by tilting out the wire basket in the freezer compartment.

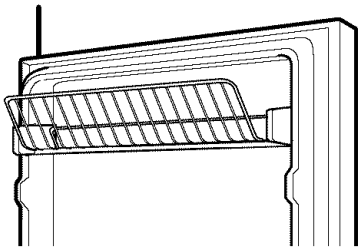

1. To remove the freezer door rack, pull the bracket outward until you hear a clicking sound; then remove the wire rack.
2. To replace the freezer door rack, hook the end of the rack in the bracket, and push down until the rack locks into place.

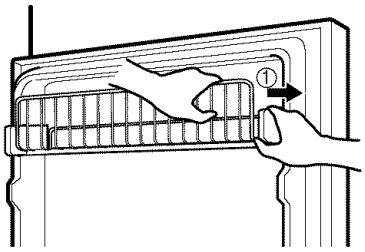

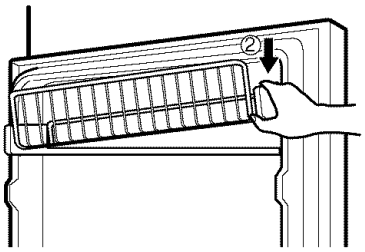

ICE BIN

1. To remove Ice bin, pull it out as far as it comes. Tilt up the front of the ice bin and pull straight out.
2. To Install, insert ice bin into frame rails and push back into place.

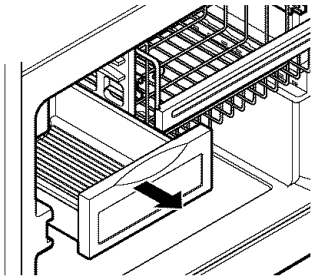

DURABASE (Drawer-Type Models)

1. To remove the Durabase, push it back to the end as much as possible. Tilt up the front of the Durabase and pull straight out.
2. To install, insert the Durabase in rail assembly.

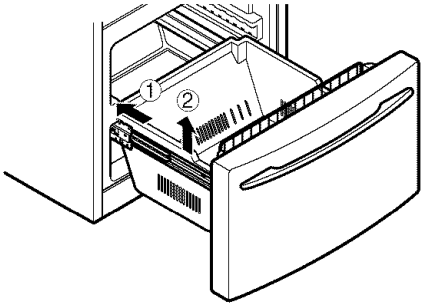

WIRE DURABASE (Swing-Type Models)

1. To remove wire Durabase, pull wire durabase out to full extension.
   Tilt up the front of the wire Durabase and pull it straight out.
2. To install, insert the wire Durabase into frame rails and push back into place.

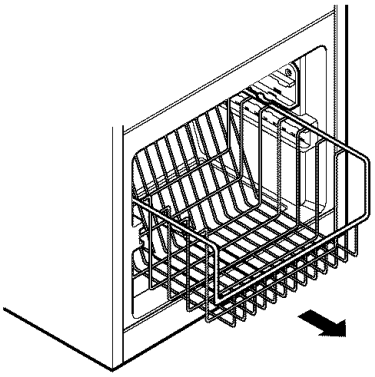

DURABASE DIVIDER

The Durabase divider allows you to organize the Durabase area into sections.

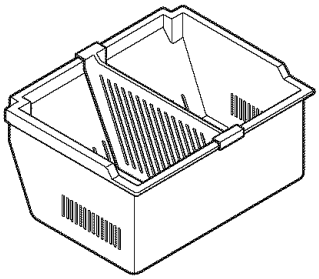

1. To remove, pull divider staight up.
2. To install, hook top corners of divider over top edge of durabase.

DRAWER TRAY (on some models)

The drawer tray prevents small food items from falling between the basket rungs.

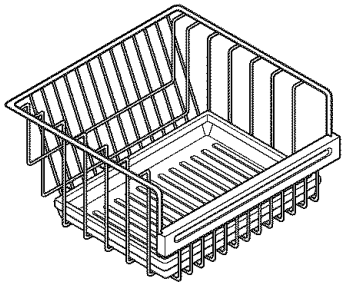

GLIDE-OUT DRAWER BASKETS (On some models)

1. To remove, lift basket up, and pull straight out.

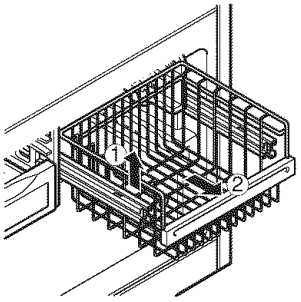

2. To Install, pull both rails out to full extension. Hook the basket supports into the rail tabs and push to the back of compartment.

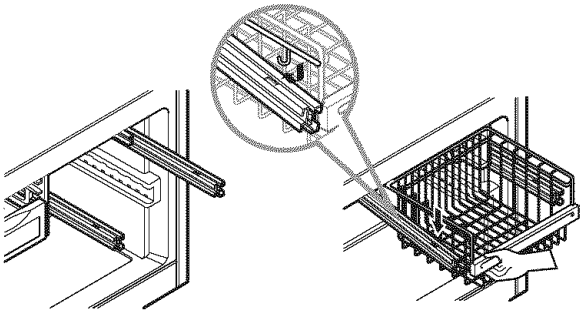

⚠ WARNING

Explosion Hazard

Use non-flammable cleaner.

Failure to do so can result in death, explosion, or fire.

Both the refrigerator and freezer sections defrost automatically. However, clean both sections about once a month to prevent odors. Wipe up spills immediately.

GENERAL CLEANING TIPS

- Unplug refrigerator or disconnect power.
- Remove all removable parts, such as shelves, crispers, etc. Refer to sections in Using Your Refrigerator for removal instructions.
- Use a clean sponge or soft cloth and a mild detergent in warm water. Do not use abrasive or harsh cleaners.
- Hand wash, rinse and dry all surfaces thoroughly.
- Plug in refrigerator or reconnect power.

OUTSIDE

Waxing external painted metal surfaces helps provide rust protection. Do not wax plastic parts. Wax painted metal surfaces at least twice a year using appliance wax (or auto paste wax). Apply wax with a clean, soft cloth.

For products with a stainless steel exterior, use a clean sponge or soft cloth and a mild detergent in warm water. Do not use abrasive or harsh cleaners. Dry thoroughly with a soft cloth.

INSIDE WALLS (allow freezer to warm up so cloth won't stick)

To help remove odors, you can wash the inside of the refrigerator with a mixture of baking soda and warm water. Mix 2 tablespoons baking soda to 1 quart of water (26 g soda to 1 liter water.) Be sure the baking soda is completely dissolved so does it not scratch the surfaces of the refrigerator.

DOOR LINERS AND GASKETS

Do not use cleaning waxes, concentrated detergents, bleaches, or cleaners containing petroleum on plastic refrigerator parts.

PLASTIC PARTS (covers and panels)

Do not use window sprays, abrasive cleansers, or flammable fluids. These can scratch or damage the material.

CONDENSER COILS

Remove grille base. (See the grille base section on page 8.)

Use a vacuum cleaner with an extended attachment to clean condenser coils.

Vacuum coils when dusty or dirty. Coils may need to be cleaned as often as every other month.

Replace grille base.

LIGHT BULB REPLACEMENT

⚠ WARNING

Electrical Shock Hazard

Before replacing a burned-out light bulb, either unplug the refrigerator or turn off power at the circuit breaker or fuse box.

NOTE: Moving the control to the OFF position does not remove power to the light circuit.

NOTE: Not all appliance bulbs will fit your refrigerator. Be sure to replace the bulb with one of the same size, shape and wattage.

To change Refrigerator Light Bulbs:

1. Unplug Refrigerator, or disconnect power at the circuit breaker.
2. If necessary, remove top shelf or shelves.
3. Using a flat instrument, gently pry the cover loose in the front as shown. Rotate downward toremove rear tabs.
4. Make sure the bulbs are cool to the touch. Turn bulbs counterclockwise to remove.
5. Assemble in reverse order by snapping the Lamp Cover in, engaging the rear tabs followed by the front tabs.

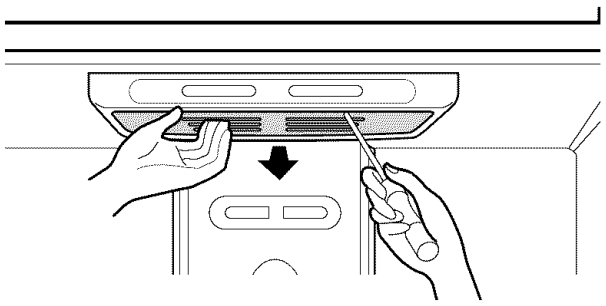

To change the freezer light:

1. Unplug refrigerator or disconnect power.
2. Reach behind light shield to remove bulb.
3. Replace bulb with a 40-watt appliance bulb.
4. Plug in refrigerator or reconnect power.

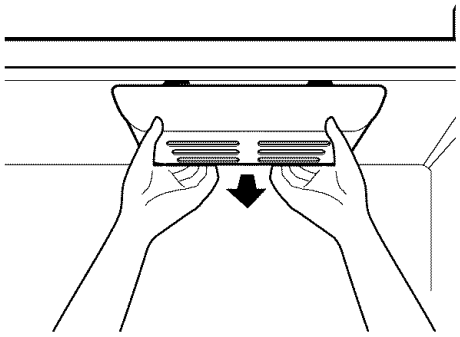

CAUTION: DO NOT place fingers inside of cover. Lamp may be hot.

POWER INTERRUPTIONS

If the electricity goes off, call the power company and ask how long it will be off.

1. If the power will be out for 24 hours or less, keep both refrigerator doors closed to help foods stay cold and frozen.
2. If the power will be out for more than 24 hours:
   a) Remove all frozen food and store it in a frozen food locker.

   OR

   b) Place 2 lbs of dry ice in the freezer for every cubic foot of freezer space. This will keep the food frozen for two to four days. While handling dry ice, wear gloves to protect your hands from frostbite.

   OR

   c) If neither a food locker nor dry ice is available, consume or can perishable food at once.

WHEN YOU GO ON VACATION

If you choose to leave the refrigerator on while you are away, follow these steps to prepare your refrigerator before you leave.

1. Use up any perishables and freeze other items.
2. Empty the ice bin.

If you choose to turn the refrigerator off before you leave, follow these steps.

1. Remove all food from the refrigerator.
2. Depending on your model, set the thermostat control (refrigerator control) to OFF. See the **Setting the Controls** section.
3. Clean refrigerator, wipe it and dry well.
4. Tape rubber or wood blocks to the tops of both doors to prop them open far enough for air to get in. This stops odor and mold from building up.

WHEN YOU MOVE

When you are moving your refrigerator to a new home, follow these steps to prepare it for the move.

1. Remove all food from the refrigerator and pack all frozen food in dry ice.
2. Depending on your model, turn the thermostat control (refrigerator control) to OFF. See the **Setting the Controls** section.
3. Unplug the refrigerator.
4. Clean, wipe and dry thoroughly.
5. Take out all removable parts, wrap them well and tape them together so they don't shift and rattle during the move. Refer to sections in Using Your Refrigerator for removal instructions.
6. Depending on the model, raise the front of the refrigerator so it rolls more easily OR screw in the leveling legs all the way so they don't scrape the floor. See the **Door Closing** section.
7. Tape the doors shut and tape the power cord to the refrigerator cabinet.

When you get to your new home, put everything back and refer to the **Installing Your Refrigerator** section for preparation instructions.

(Some models)

⚠ WARNING

Personal Injury Hazard

Avoid contact with the moving parts of the ejector mechanism, or with the heating element that releases the cubes. DO NOT place fingers or hands on the automatic icemaking mechanism while the refrigerator is plugged in.

OPERATION INSTRUCTIONS

A newly-installed refrigerator may take 12 to 24 hours to begin making ice.

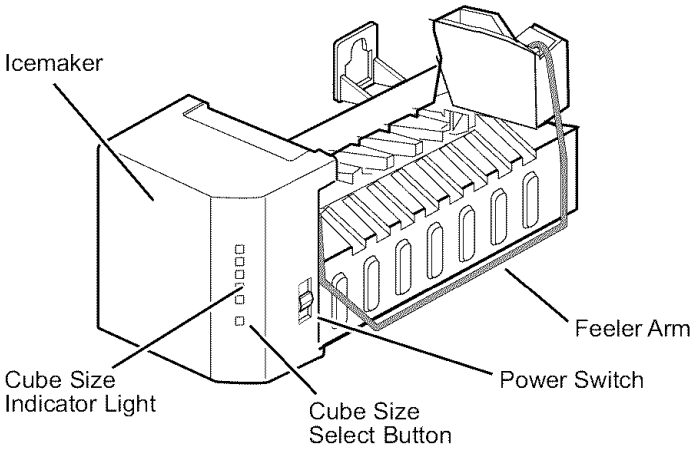

The icemaker will produce eight cubes per cycle - approximately 100-130 cubes in a 24-hour period, depending on freezer compartment temperature, room temperature, number of door openings and other operating conditions.

If the refrigerator is used before the water connection is made to the icemaker, set the power switch to **O (off)**.

When the refrigerator has been connected to the water supply, set the power switch to **I (on)**.

The icemaker will fill with water when it cools to freezing. A newly-installed refrigerator may take 12 to 24 hours to begin making ice cubes.

Throw away the first few batches of ice to allow the water line to clear.

Be sure nothing interferes with the sweep of the feeler arm.

When the bin fills to the level of the feeler arm, the icemaker will stop producing ice.

It is normal for several cubes to be stuck together.

If ice is not used frequently, old ice cubes will become cloudy, taste stale, and shrink.

NOTE: If the cube size is smaller or larger than you expected, you can regulate the size with the cube size button.

Every time you press the cube size button, the indicator moves up one light. The higher the light position, the larger the cube will be. Pressing at highest position returns indicator to lowest position.

WHEN YOU SHOULD SET THE ICEMAKER POWER SWITCH TO O (OFF)

- When the water supply will be shut off for several hours.
- When the ice storage bin is removed for more than a minute or two.
- When the refrigerator will not be used for several days.

NORMAL SOUNDS YOU MAY HEAR

- The icemaker water valve will buzz as the icemaker fills with water. If the power switch is in the **I (on)** position, it will buzz even if it has not yet been hooked up to water. To stop the buzzing, move the power switch to **O (off)**.

  NOTE: Keeping the power switch in the **I (on)** position before the water line is connected can damage the icemaker.
- You will hear the sound of cubes dropping into the bin and water running in the pipes as the icemaker refills.

PREPARING FOR VACATION

Set the icemaker power switch to **O (off)** and shut off the water supply to the refrigerator.

If the ambient temperature will drop below freezing, have a qualified servicer drain the water supply system to prevent serious property damage due to flooding from ruptured water lines or connections.

BEFORE YOU BEGIN

This water line installation is not warranted by the refrigerator or icemaker manufacturer. Follow these instructions carefully to minimize the risk of expensive water damage.

Water hammer (water banging in the pipes) in house plumbing can cause damage to refrigerator parts and lead to water leakage or flooding. Call a qualified plumber to correct water hammer before installing the water supply line to the refrigerator.

To prevent burns and product damage, do not hook up the water line to the hot water line.

If you use your refrigerator before connecting the water line, make sure the icemaker power switch is in the **O (off)** position.

Do not install the icemaker tubing in areas where temperatures fall below freezing.

When using any electrical device (such as a power drill) during installation, be sure the device is double-insulated or grounded in a manner to prevent the hazard of electric shock, or is battery-powered.

All installations must be in accordance with local plumbing code requirements.

NOTE: Wear eye protection.

WHAT YOU WILL NEED

- **Copper Tubing**, 1/4″ outer diameter to connect the refrigerator to the water supply. Be sure both ends of the tubing are cut square.

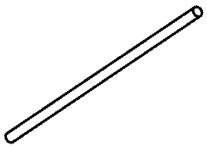

To determine how much tubing you need: measure the distance from the water valve on the back of the refrigerator to the water supply pipe. Then add 8 feet (2.4 m). Be sure there is sufficient extra tubing (about 8 feet [2.4 m] coiled into 3 turns of about 10″ [25 cm] diameter) to allow the refrigerator to move out from the wall after installation.

- **A cold water supply**. The water pressure must be between 20 and 120 p.s.i. on models without a water filter and between 40 and 120 p.s.i. on models with a water filter.
- **Power drill**.
- **1/2″ or adjustable wrench**.
- **Straight- and Phillips-blade screwdriver**.

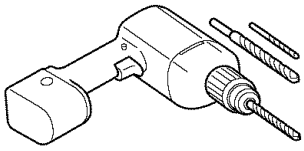

- **Two 1/4″ outer diameter compression nuts and 2 ferrules (sleeves)** to connect the copper tubing to the shutoff valve and the refrigerator water valve.

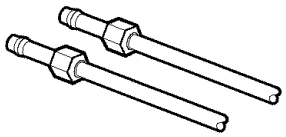

- If your existing copper water line has a flared fitting at the end, you will need an **adapter** (available at plumbing supply stores) to connect the water line to the refrigerator OR you can cut off the flared fitting with a tube cutter and then use a compression fitting.

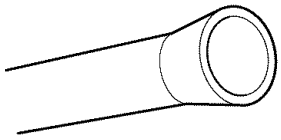

- **Shutoff valve to connect to the cold water line**. The shutoff valve should have a water inlet with a minimum inside diameter of 5/32″ at the point of connection to the COLD WATER LINE. Saddle-type shutoff valves are included in many water supply kits. Before purchasing, make sure a saddle-type valve complies with your local plumbing codes.

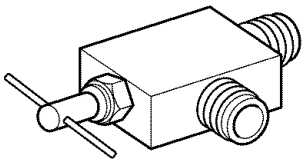

INSTALLATION INSTRUCTIONS

Install the shutoff valve on the nearest frequently used drinking water line.

1. SHUT OFF THE MAIN WATER SUPPLY

Turn on the nearest faucet to relieve the pressure on the line.

2. CHOOSE THE VALVE LOCATION

Choose a location for the valve that is easily accessible. It is best to connect into the side of a vertical water pipe. When it is necessary to connect into a horizontal water pipe, make the connection to the top or side, rather than at the bottom, to avoid drawing off any sediment from the water pipe.

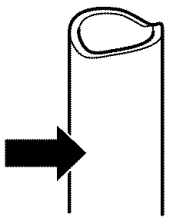

3. DRILL THE HOLE FOR THE VALVE

Drill a 1/4″ hole in the water pipe (even if using a self-piercing valve) using a sharp bit. Remove any burrs resulting from drilling the hole in the pipe. Take care not to allow water to drain into the drill. Failure to drill a 1/4″ hole may result in reduced ice production or smaller cubes.

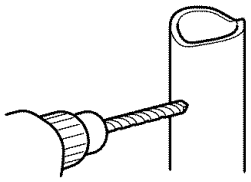

INSTALLATION INSTRUCTIONS (CONTINUED)

4. FASTEN THE SHUTOFF VALVE

Fasten the shutoff valve to the cold water pipe with the pipe clamp.

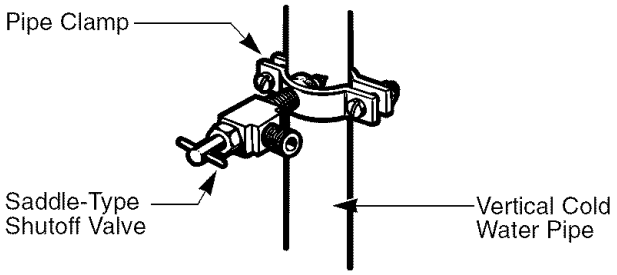

NOTE: Commonwealth of Massachusetts Plumbing Codes 248CMR shall be adhered to. Saddle valves are illegal and use is not permitted in Massachusetts. Consult with your licensed plumber.

5. TIGHTEN THE PIPE CLAMP

Tighten the clamp screws until the sealing washer begins to swell.

NOTE: Do not overtighten or you may crush the tubing.

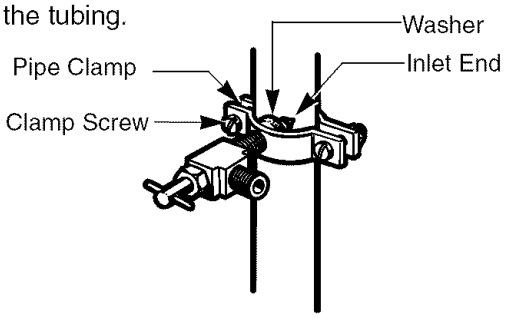

6. ROUTE THE TUBING

Route the tubing between the cold water line and the refrigerator.

Route the tubing through a hole drilled in the wall or floor (behind the refrigerator or adjacent base cabinet) as close to the wall as possible.

NOTE: Be sure there is sufficient extra tubing (about 8 feet coiled into 3 turns of about 10″ diameter) to allow the refrigerator to move out from the wall after installation.

7. CONNECT THE TUBING TO THE VALVE

Place the compression nut and ferrule (sleeve) for copper tubing onto the end of the tubing and connect it to the shutoff valve. Make sure the tubing is fully inserted into the valve. Tighten the compression nut securely.

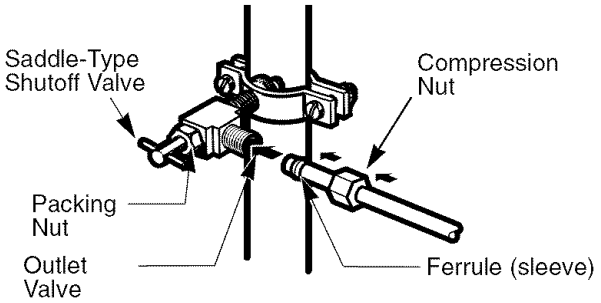

NOTE: Commonwealth of Massachusetts Plumbing Codes 248CMR shall be adhered to. Saddle valves are illegal and use is not permitted in Massachusetts. Consult with your licensed plumber.

8. FLUSH OUT THE TUBING

Turn the main water supply on and flush out the tubing until the water is clear.

Shut the water off at the water valve after about one quart of water has been flushed through the tubing.

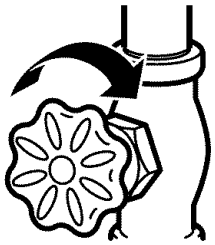

9. CONNECT THE TUBING TO THE REFRIGERATOR

NOTES:

- Before making the connection to the refrigerator, be sure the refrigerator power cord is not plugged into the wall outlet.
- If your refrigerator does not have a water filter, we recommend installing one. If your water supply has sand or particles that could clog the screen of the refrigerator's water valve. Install the filter in the water line near the refrigerator.

  Remove the plastic flexible cap from the refrigerator connection.

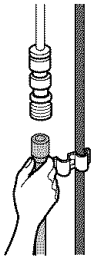

Place the compression nut and ferrule (sleeve) onto the end of the tubing.

Insert the end of the tubing into the connection as far as possible. While holding the tubing, tighten the fitting.

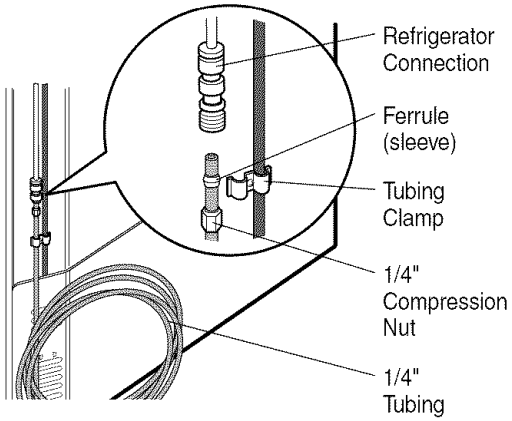

Fasten the tubing into the tubing Clamp attached to the back of the refrigerator.
First, loosen the screw fastening the clamp. Next, insert the tubing in the groove. Finally, re-fasten the screw.

10. TURN THE WATER ON AT THE SHUTOFF VALVE

Tighten any connections that leak.

Reattach the compressor compartment access cover.

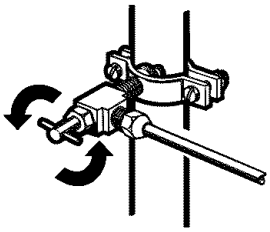

11. PLUG IN THE REFRIGERATOR

Arrange the coil of tubing so that it does not vibrate against the back of the refrigerator or against the wall. Push the refrigerator back to the wall.

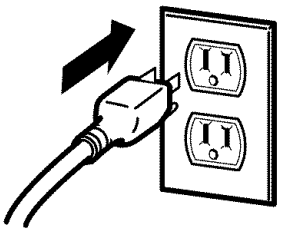

12. START THE ICEMAKER

Set the icemaker power switch to the **ON** position. The icemaker will not begin to operate until it reaches its operating temperature of 15°F (–9°C) or below. It will then begin operation automatically if the icemaker power switch is in the **I (on)** position.

UNDERSTANDING SOUNDS YOU MAY HEAR

Your new refrigerator may make sounds that your old one didn't make. Because the sounds are new to you, you might be concerned about them. Most of the new sounds are normal. Hard surfaces, like the floor, walls and cabinets, can make the sounds seem louder than they actually are. The following describes the kinds of sounds and what may be making them.

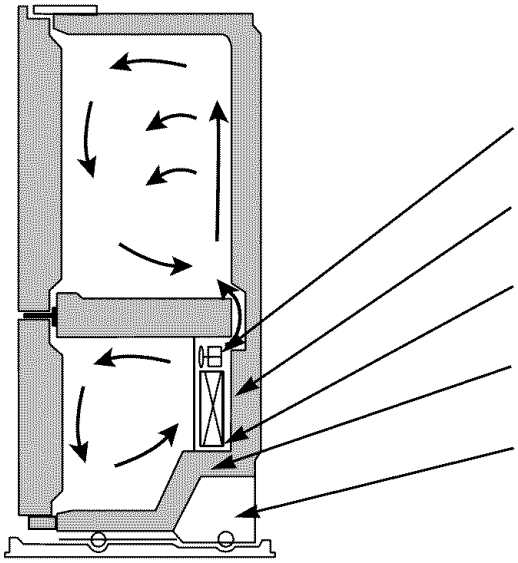

- The defrost timer will click when the automatic defrost cycle begins and ends. The thermostat control (or refrigerator control, depending on the model) will also click when cycling on and off.
- Rattling noises may come from the flow of refrigerant, the water line, or items stored on top of the refrigerator.
- Your refrigerator is designed to run more efficiently to keep your food items at the desired temperature. The high efficiency compressor may cause your new refrigerator to run longer than your old one, and you may hear a pulsating or high-pitched sound.
- You may hear the evaporator fan motor circulating the air through the refrigerator and freezer compartments.
- As each cycle ends, you may hear a gurgling sound due to the refrigerant flowing in your refrigerator.
- Contraction and expansion of the inside walls may cause a popping noise.
- Water dripping on the defrost heater during a defrost cycle may cause a sizzling sound.
- You may hear air being forced over the condenser by the condenser fan.
- You may hear water running into the drain pan during the defrost cycle.

Note: Due to refrigerator's low energy consumption design, the fans will remain off by the door switch activates the inner compartment light.

REFRIGERATOR DOES NOT OPERATE

Check if...	Then...
The power supply cord is unplugged.	Firmly plug the cord into a live outlet with proper voltage.
A household fuse has blown or circuit breaker tripped.	Replace the fuse or reset the circuit breaker.
The refrigerator control is set to the OFF position.	Refer to the **Setting the Controls** section on page 16.
Refrigerator is in the defrost cycle.	Wait about 30 minutes for defrost cycle to end.

VIBRATION OR RATTLING NOISE

Check if...	Then...
The refrigerator is not resting solidly on the floor.	Floor is weak or uneven or leveling legs need adjusting. See **Installation** section on page 8.

LIGHTS DO NOT WORK

Check if...	Then...
The power supply cord is unplugged.	Firmly plug the cord into a live outlet with proper voltage.
Light bulb is loose in the socket.	Turn the refrigerator control to the OFF position and unplug the refrigerator. Gently remove the bulb and reinsert. Then plug in refrigerator and reset the refrigerator control.
Light bulb has burned out.	Replace with an appliance bulb of the same wattage, size and shape available at your local hardware store. (See the **Changing the Light Bulb(s)** section on pages 24–25.) Turn the temperature control to the OFF position and unplug the refrigerator prior to replacement.

COMPRESSOR MOTOR SEEMS TO RUN TOO MUCH

Check if...	Then...
The refrigerator that was replaced was an older model.	Modern refrigerators with more storage space require more operating time.
The room temperature is hotter than normal.	The motor will run longer under warm conditions. At normal room temperatures, expect your motor to run about 40% to 80% of the time. Under warmer conditions, expect it to run even more often.
The door is opened often or a large amount of food has just been added.	Adding food and opening the door warms the refrigerator. It is normal for the refrigerator to run longer in order to cool the refrigerator back down. Adding a large amount of food warms the refrigerator. See the **Food Storage Guide** section on page 17. In order to conserve energy, try to get everything you need out of the refrigerator at once, keep food organized so it is easy to find and close the door as soon as the food is removed.
The refrigerator was recently plugged in and the refrigerator control was set correctly.	The refrigerator will take up to 24 hours to cool completely.
The refrigerator control is not set correctly for the surrounding conditions.	See the **Adjusting Control Settings** section on page 17.
The doors are not closed completely.	Push the doors firmly shut. If they will not shut all the way, see **Doors will not close completely** below.
The condenser coils are dirty.	This prevents air transfer and makes the motor work harder. Clean the condenser coils. Refer to the **Care and Cleaning** section on pages 24–25.

DOORS WILL NOT CLOSE COMPLETELY

Check if...	Then...
The refrigerator is not level.	See **Leveling and Door Alignment** section on page 15.
Food packages are blocking the door open.	Rearrange food containers to clear door and door shelves.
The ice bin, crisper cover, pans, shelves, door bins or baskets are out of position.	Push bins all the way in and put crisper cover, pans, shelves and baskets into their correct positions. See the **Using Your Refrigerator** section on pages 16–23.
The gaskets are sticking.	Clean gaskets and the surface that they touch. Rub a thin coat of paraffin wax on the gaskets after cleaning.
The refrigerator wobbles or seems unstable.	Level the refrigerator. Refer to the **Leveling and Door Alignment** section on page 15.
The doors were removed during product installation and not properly replaced.	Remove and replace the doors according to the **Removing, Reversing, and Replacing Refrigerator Doors** section on pages 9–14, or call a qualified service technician.

FROST OR ICE CRYSTALS ON FROZEN FOOD

Check if...	Then...
The door is not closing properly.	See **Doors will not close completely** above.
The door is opened often.	When the door is opened, warm, humid air is allowed in the freezer, resulting in frost.

ICE HAS OFF-TASTE OR ODOR

Check if...	Then...
The icemaker was recently installed.	Discard first few batches of ice to avoid discolored or off-flavored ice.
The ice has been stored for too long.	Throw away old ice and make new supply.
The food has not been wrapped tightly in either compartment.	Rewrap foods since odors may migrate to the ice if food is not wrapped properly.
The water supply contains minerals such as sulfur.	A filter may need to be installed to eliminate taste and odor problems.
The interior of refrigerator needs cleaning.	See **Care and Cleaning** section on pages 24–25.
Ice storage bin needs cleaning.	Empty and wash bin. Discard old cubes.

THERE IS WATER IN THE DEFROST DRAIN PAN

Check if...	Then...
The refrigerator is defrosting.	The water will evaporate. It is normal for water to drip into the defrost pan.
It is more humid than normal.	Expect that the water in the defrost pan will take longer to evaporate. This is normal when it is hot or humid.

THE REFRIGERATOR SEEMS TO MAKE TOO MUCH NOISE

Check if...	Then...
The sounds may be normal for your refrigerator.	Refer to the **Understanding Sounds You May Hear section on** page 30.

THE ICEMAKER IS NOT PRODUCING ICE OR ICE CUBES ARE FREEZING TOO SLOWLY

Check if...	Then...
The freezer temperature is cold enough to produce ice.	Wait 24 hours after hook-up for ice production. See the **Setting the Controls** section on page 16.
Door left open.	Check to see if something is holding the door open.

CUBES PRODUCED BY ICEMAKER ARE TOO SMALL

Check if...	Then...
Smaller cube size level is selected.	Select larger cube size using cube size selector.
Water shutoff valve connecting refrigerator to water line may be clogged.	Call a plumber to clear the valve.

THE DOORS ARE DIFFICULT TO OPEN

Check if...	Then...
The gaskets are dirty or sticky.	Clean gaskets and the surfaces that they touch. Rub a thin coat of appliance polish or kitchen wax on the gaskets after cleaning.
The door is reopened within a short time after having been opened.	When you open the door, warmer air enters the refrigerator. As the warm air cools, it can create a vacuum. If the door is hard to open, wait 5 minutes to allow the air pressure to equalize, then see if it opens more easily.

TEMPERATURE IS TOO WARM OR THERE IS INTERIOR MOISTURE BUILDUP

Check if...	Then...
The air vents are blocked. Cold air circulates from the freezer to the fresh food section and back again through air vents in the wall dividing the two sections.	Locate air vents by using your hand to sense airflow and move all packages that block vents and restrict airflow. Refer to **Multi Flow** on page 16 for the location of air vents.
The doors are opened often.	When the door is opened, warm humid air is allowed into the refrigerator. The more the door is opened, the faster the humidity builds up, and the more warm air the refrigerator must cool. In order to keep the refrigerator cool, try to get everything you need out of the refrigerator at once, keep food organized so it is easy to find and close the door as soon as the food is removed.
The control is not set correctly for the surrounding conditions.	Refer to the **Setting the Controls** section on page 16. Wait 24 hours for temperatures to stabilize or even out. If the temperature is too cold or too warm, move the dial one number at a time.
A large amount of food has just been added to the refrigerator or freezer.	Adding food warms the refrigerator. It can take a few hours for the refrigerator to return to normal temperature.
The food is not packaged correctly.	Wrap food tightly and wipe off damp containers prior to storing in the refrigerator to avoid moisture accumulation. If necessary, repackage food according to the guidelines in the **Food Storage Guide** section on page 17.
The doors are not closing completely.	See **Doors will not close completely** on page 31.
The weather is humid.	In humid weather, air carries moisture into refrigerator when doors are opened.
A self-defrost cycle was completed.	It is normal for droplets to form on the back wall after the refrigerator self-defrosts.

NOTES