This Owner's Manual is provided and hosted by Appliance Factory Parts.

Appliance Factory Parts
Experts in BBQ, Humidifier, & Appliance Parts
1-800-955-7075

FISHER & PAYKEL CMOH-30SS Owner's Manual

Shop genuine replacement parts for FISHER & PAYKEL CMOH-30SS

Find Your FISHER & PAYKEL Microwave Parts - Select From 4 Models

-------- Manual continues below --------

Fisher&Paykel

DCS by Fisher&Paykel

OVER THE RANGE CONVECTION MICROWAVE OVEN

Use and Care Guide

MODEL:
CMOH30SS

c UL US

A MESSAGE TO OUR CUSTOMERS

Thank you for selecting this Over the Range Convection Microwave Oven. Because of this appliance's unique features we have developed this Use and Care Guide. It contains valuable information on how to properly operate and maintain your new appliance for years of safe and enjoyable cooking.

To help serve you better, please fill out and submit your Product Registration by visiting our websites:

For Fisher & Paykel brand: www.fisherpaykel.com and selecting "REGISTER YOUR PRODUCT"

For DCS brand: www.dcsappliances.com and selecting "Customer Care" on the home page and then select "Product Registration".

In addition, keep this guide handy, as it will help answer questions that may arise as you use your new appliance.

For your convenience, product questions can be answered by a Customer Care Representative at 1-888-936-7872, or email: customer.care@fisherpaykel.com.

NOTE: Please write the Model and Serial Numbers on this page for references (can be found on bottom left corner of the cavity face).

MODEL NUMBER _____ SERIAL NUMBER _____

NOTE: Inspect the product to verify that there is no shipping damage. If any damage is detected, call the shipper and initiate a damage claim. DCS by Fisher & Paykel is not responsible for shipping damage.

DO NOT discard any packing material (box, pallet, straps) until the unit has been inspected.

PRECAUTIONS TO AVOID POSSIBLE EXPOSURE TO EXCESSIVE MICROWAVE ENERGY

- ***Do not attempt to operate this microwave oven with the door open since open-door operation can result in harmful exposure to microwave energy. It is important not to defeat or tamper with the safety interlocks.***
- ***Do not place any object between the microwave oven front face and the door or allow soil or cleaner residue to accumulate on sealing surfaces.***
- ***Do not operate the microwave oven if it is damaged. It is particularly important that the microwave oven door close properly and that there is no damage to the: (1) door (bent), (2) hinges and latches (broken or loosened), (3) door seals and sealing surfaces.***
- ***The microwave oven should not be adjusted or repaired by anyone except properly qualified service personnel.***

PLEASE RETAIN THIS MANUAL FOR FUTURE REFERENCE.

TABLE OF CONTENTS

A Message to Our Customers 2
Precautions to Avoid Possible Exposure to Excessive Microwave Energy 2
Important Safety Instructions 4
Unpacking and Examining Your Oven 6
Grounding Instructions 6
Information You Need to Know 7
- About Your Microwave Oven 7
- About Microwave Cooking 7
- About Utensils and Coverings 8
- About Children and the Microwave 10
- About Food 10
- About Safety 11

Part Names 12
Before Operating 14
- To Set the Clock 14
- Stop/Clear 14

Manual Microwave Operation 15
- Turntable On / Off 15
- Fan / Light 15
- Time Cooking -Microwave 15
- Keep Warm 16
- To Set Power Level 16

Microwave Features 17
- Defrost 17
- Defrost Chart 17
- Manual Defrost 18
- Sensor Cooking 18
- Sensors 19
- Sensor Reheat 19
- Popcorn 19
- Sensor Chart 20
- Sensor Cook 21
- Sensor Cook Chart 21
- Sensor Cook Recipes 22

Manual Convection and Automatic Mix Operation 23
- Convection Cooking 23
- To Cook with Convection 23
- To Preheat and Cook with Convection 23
- Broil 23
- Slow Cook 24
- Automatic Mix Cooking 24
- To Cook with Automatic Mix 24
- To Preheat and Cook with Automatic Mix 24

Convection Automatic Mix Features 25
- Auto Broil 25
- Auto Broil Chart 25
- Auto Roast 26
- Auto Roast Chart 26
- Auto Bake 27
- Auto Bake Chart 27

Other Convenient Features 28
- Multiple Sequence Cooking 28
- More or Less Time Adjustment 28
- Extra Minute 28
- Help (Display Indicator) 28
- Help Menu 29
- Start 30
- Kitchen Timer 30
- Demonstration Mode 30

Cleaning and Care 31
- Exterior 31
- Door 31
- Touch Control Panel 31
- Interior - After Microwave Cooking 31
- Interior - After Convection, Mix or Broil Cooking 31
- Waveguide Cover 31
- Odor Removal 31
- Turntable/Turntable Support 31
- Oven Racks 32
- Grease Filters 32
- Fan 32
- Light 32
- Charcoal Filter 33
- Oven Light 33

Service Call Check 34
Specifications 35
Warranty 36

INTERACTIVE COOKING SYSTEM

The Interactive Cooking System offers step-by-step instructions in the display for using the oven, from setting the clock to programming each feature. It also includes Help Menu for instructions on using Safety Lock, Audible Signal Elimination, Start and Help. There is a choice of English, Spanish or French and a choice of U.S. Customary Unit-pound or Metric-kilograms. Touch HELP MENU and follow the directions displayed or check page 29.

IMPORTANT SAFETY INSTRUCTIONS

When using electrical appliances basic safety precautions should be followed, including the following:

WARNING - To reduce the risk of burns, electric shock, fire, injury to persons or exposure to excessive microwave energy:

1. Read all instructions before using the appliance.
2. Read and follow the specific "PRECAUTIONS TO AVOID POSSIBLE EXPOSURE TO EXCESSIVE MICROWAVE ENERGY" on page 2.
3. This appliance must be grounded. Connect only to properly grounded outlet. See "GROUNDING INSTRUCTIONS" on page 6 and INSTALLATION INSTRUCTIONS.
4. Install or locate this appliance only in accordance with the provided installation instructions.
5. Some products such as whole eggs and sealed containers—for example, closed glass jars—are able to explode and should not be heated in this microwave oven.
6. Use this appliance only for its intended use as described in this manual. Do not use corrosive chemicals or vapors in this appliance. This type of microwave oven is specifically designed to heat, cook or dry food. It is not designed for industrial or laboratory use.
7. As with any appliance, close supervision is necessary when used by children.
8. Do not operate this appliance if it has a damaged cord or plug, if it is not working properly or if it has been damaged or dropped.
9. This appliance should be serviced only by qualified service personnel.
10. Do not cover or block any openings on the appliance.
11. Do not store or use this appliance outdoors. Do not use this product near water—for example, near a kitchen sink, in a wet basement or near a swimming pool, or similar locations.
12. Do not immerse cord or plug in water.
13. Keep cord away from heated surfaces.
14. Do not let cord hang over edge of table or counter.
15. See door surface cleaning instructions on page 31.
16. To reduce the risk of fire in the microwave oven cavity:
    a. Do not overcook food. Carefully attend to appliance when paper, plastic or other combustible materials are placed inside the microwave oven to facilitate cooking.
    b. Remove wire twist-ties from paper or plastic bags before placing bag in microwave oven.
    c. If materials inside the microwave oven ignite, keep microwave oven door closed, turn microwave oven off and disconnect the power cord or shut off power at the fuse or circuit breaker panel.
    d. Do not use the cavity for storage purposes. Do not leave paper products, cooking utensils or food in the cavity when not in use.

IMPORTANT SAFETY INSTRUCTIONS

17. Liquids, such as water, coffee or tea are able to be overheated beyond the boiling point without appearing to be boiling. Visible bubbling or boiling when the container is removed from the microwave oven is not always present. THIS COULD RESULT IN VERY HOT LIQUIDS SUDDENLY BOILING OVER WHEN A SPOON OR OTHER UTENSIL IS INSERTED INTO THE LIQUID.
    To reduce the risk of injury to persons:
    a. Do not overheat the liquid.
    b. Stir the liquid both before and halfway through heating it.
    c. Do not use straight-sided containers with narrow necks. Use a wide-mouthed container.
    d. After heating, allow the container to stand in the microwave oven at least for 20 seconds before removing the container.
    e. Use extreme care when inserting a spoon or other utensil into the container.
18. Clean ventilation openings and grease filters frequently—grease should not be allowed to accumulate on ventilation openings, hood (louver) or grease filters.
19. Use care when cleaning the louver and the grease filters. Corrosive cleaning agents, such as lye-based oven cleaners, may damage the louver and the grease filters.
20. When flaming food under the hood, turn the fan on.
21. This appliance is suitable for use above both gas and electric cooking equipment 36" wide or less.

SAVE THESE INSTRUCTIONS

UNPACKING AND EXAMINING YOUR OVEN

Carefully remove microwave oven from carton. SAVE THE CARTON AS IT MAY MAKE INSTALLATION EASIER.

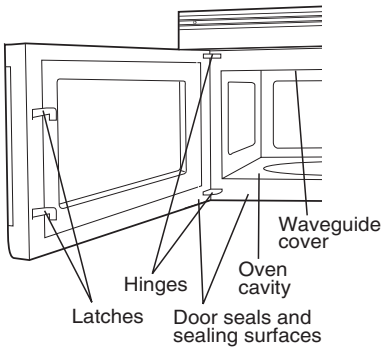

Remove:

1. All packing materials from inside the microwave oven cavity; however, DO NOT REMOVE THE WAVEGUIDE COVER, which is located on the ceiling in the microwave oven cavity. Check to see that there are Installation Instructions, Wall Template and Top Template. Read enclosures and SAVE the Use and Care Guide.
2. The feature sticker from the outside of the door, if there is one.

Check the microwave oven for any damage, such as misaligned or bent door, damaged door seals and sealing surfaces, broken or loose door hinges and latches and dents inside the cavity or on the door. If there is any damage, do not operate the microwave oven and contact your dealer or Fisher & Paykel AUTHORIZED SERVICER.

See Installation Instructions for more details.

GROUNDING INSTRUCTIONS

This appliance must be grounded. This microwave oven is equipped with a cord having a grounding wire with a grounding plug. It must be plugged into a wall receptacle that is properly installed and grounded in accordance with the National Electrical Code and local codes and ordinances. In the event of an electrical short circuit, grounding reduces risk of electric shock by providing an escape wire for the electric current.

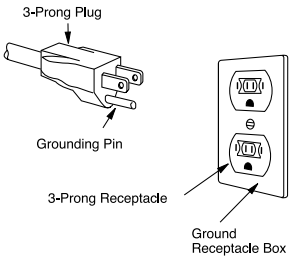

Warning – Improper use of the grounding plug can result in a risk of electric shock.

ELECTRICAL REQUIREMENTS

Check Installation Instructions for proper location for the power supply.

The electrical requirements are a 120 volt 60 Hz, AC only, 15 amp. or more protected electrical supply. It is recommended that a separate circuit serving only the microwave oven be provided.

The microwave oven is equipped with a 3-prong grounding plug. It must be plugged into a wall receptacle that is properly installed and grounded. DO NOT UNDER ANY CIRCUMSTANCES CUT OR REMOVE THE GROUNDING PIN FROM THE PLUG.

Notes:

1. If you have any questions about the grounding or electrical instructions, consult a qualified electrician or service person.

2. Neither Fisher & Paykel nor the dealer can accept any liability for damage to the microwave oven or personal injury resulting from failure to observe the correct electrical connection procedures.

RADIO OR TV INTERFERENCE

Should there be any interference caused by the microwave oven to your radio or TV, check that the microwave oven is on a different electrical circuit, relocate the radio or TV as far away from the microwave oven as feasible or check position and signal of receiving antenna.

INFORMATION YOU NEED TO KNOW

ABOUT YOUR MICROWAVE OVEN

This Use and Care Guide is valuable: read it carefully and always save it for reference.

NEVER use the microwave oven without the turntable and support nor turn the turntable over so that a large dish could be placed in the microwave oven. The turntable will turn both clockwise and counter-clockwise.

ALWAYS have food in the microwave oven when it is on to absorb the microwave energy.

When using the microwave oven at power levels below 100%, you may hear the magnetron cycling on and off.

The fan will automatically start when heat rises from range surface units or burners and when convection, high mix, low mix or the broil settings are used.

Condensation is a normal part of microwave cooking. Room humidity and the moisture in food will influence the amount of moisture that condenses in the microwave oven. Generally, covered foods will not cause as much condensation as uncovered ones. Ventilation openings must not be blocked.

The microwave oven is for food preparation only. It should not be used to dry clothes or newspapers.

Your microwave oven is rated 850 watts by using the IEC Test Procedure. In using recipes or package directions, check food a minute or two before the minimum time and add time accordingly.

ABOUT MICROWAVE COOKING

- Arrange food carefully. Place thickest areas towards outside of dish.
- Watch cooking time. Cook for the shortest amount of time indicated and add more as needed. Food severely overcooked can smoke or ignite.
- Cover foods while cooking. Check recipe or cookbook for suggestions: - paper towels, wax paper, microwave plastic wrap (shouldn't touch food) or a lid. Covers prevent spattering and help foods to cook evenly.
- Shield with small flat pieces of aluminum foil any thin areas of meat or poultry to prevent overcooking before dense, thick areas are cooked thoroughly.
- Stir foods from outside to center of dish once or twice during cooking, if possible.
- Turn foods over once during microwaving to speed cooking of foods such as chicken and hamburgers. Large items like roasts must be turned over at least once.
- Rearrange foods such as meatballs halfway through cooking both from top to bottom and from the center of the dish to the outside.
- Add standing time. Remove food from microwave oven and stir, if possible. Cover for standing time which allows the food to finish cooking without overcooking.
- Check for doneness. Look for signs indicating that cooking temperatures have been reached.

  Doneness signs include:

  - Food steams throughout, not just at edge.
  - Center bottom of dish is very hot to the touch.
  - Poultry thigh joints move easily.
  - Meat and poultry show no pinkness.
  - Fish is opaque and flakes easily with a fork.

INFORMATION YOU NEED TO KNOW

ABOUT UTENSILS AND COVERINGS

It is not necessary to buy all new cookware. Many pieces already in your kitchen can be used successfully in your new microwave convection oven. The chart below will help you decide what utensils and coverings should be used in each mode.

UTENSILS AND COVERINGS	MICROWAVE ONLY	CONVECTION, BROIL, SLOW COOK	HIGH MIX/ROAST LOW MIX/BAKE
Aluminum foil	**YES -** Small flat pieces of aluminum foil placed smoothly on food can be used to shield areas from cooking or defrosting too quickly. Keep foil at least 1 inch from walls of oven.	**YES -** For shielding	**YES -** For shielding
Aluminum containers	**YES -** Can be used if 3/4 filled with food. Keep 1 inch away from walls and do not cover with lid.	**YES -** Broil. No cover.	**YES -** Can be used if 3/4 filled with food. Keep 1 inch away from walls and do not cover with foil.
Browning dish	**YES -** Do not exceed recommended preheating time. Follow manufacturer's directions.	**NO**	**NO**
Glass ceramic (Pyroceram®)	**YES -** Excellent	**YES -** Excellent	**YES -** Excellent
Glass, heat-resistant	**YES -** Excellent.	**YES -** Excellent	**YES -** Excellent
Glass, non-heat-resistant	**NO**	**NO**	**NO**
Lids, glass	**YES**	**YES -** Broil. No cover.	**YES**
Lids, metal	**NO**	**YES -** Broil. No cover.	**NO**
Metal cookware	**NO**	**YES**	**YES -** Do not use metal covering.
Metal, misc.: dishes with metallic trim, screws, bands, handles. Metal twist ties	**NO**	**NO**	**NO**
Oven cooking bags	**YES -** Good for large meats or foods that need tenderizing. DO NOT use metal twist ties.	**YES -** Broil. No cover.	**YES -** Do not use metal twist ties.
Paper plates	**YES -** For reheating.	**NO**	**NO**
Paper towels	**YES -** To cover for reheating and cooking. Do not use recycled paper towels which may contain metal fillings.	**NO**	**NO**
Paper, ovenable	**YES**	**YES -** For temperatures up to 400˚F. Do not use for broiling.	**YES -** For temperatures up to 400˚F.

INFORMATION YOU NEED TO KNOW

UTENSILS AND COVERINGS	MICROWAVE ONLY	CONVECTION, BROIL, SLOW COOK	HIGH MIX/ROAST LOW MIX/BAKE
Microwave-safe plastic containers	**YES -** Use for reheating and defrosting. Some microwave-safe plastics are not suitable for cooking foods with high fat and sugar content. Follow manufacturer's directions.	**NO**	**NO**
Plastic, Thermoset®	**YES**	**YES -** Are heat resistant up to 425˚F. Do not use for broiling.	**yes**
Plastic wrap	**YES -** Use brands specially marked for microwave use. DO NOT allow plastic wrap to touch food. Vent so steam can escape.	**NO**	**NO**
Pottery, porcelain stoneware	**YES -** Check manufacturer's recommendation for being microwave safe.	**YES**	**YES -** Must be microwave safe AND ovenable.
Styrofoam	**YES -** For reheating	**NO**	**NO**
Wax paper	**YES -** Good covering for cooking and reheating.	**NO**	**NO**
Wicker, wood, straw	**YES -** May be used for short periods of time. Do not use with high fat or high sugar content foods. Could char.	**NO**	**NO**

DISH CHECK. If you wish to check if a dish is safe for microwaving, place the empty dish in the microwave oven and microwave on HIGH for 30 seconds. If the dish becomes very hot, DO NOT use it for microwaving.

ACCESSORIES There are many microwave accessories available for purchase. Evaluate carefully before you purchase so that they meet your needs. A microwave-safe thermometer will assist you in determining correct doneness and assure you that foods have been cooked to safe temperatures. Fisher & Paykel is not responsible for any damage to the oven when accessories are used.

INFORMATION YOU NEED TO KNOW

ABOUT CHILDREN AND THE MICROWAVE

Children below the age of 7 should use the microwave oven with a supervising adult very near to them. Between the ages of 7 and 12, the supervising adult should be in the same room.

The child must be able to reach the microwave oven comfortably; if not, he/she should stand on a sturdy stool.

At no time should anyone be allowed to lean or swing on the microwave oven door.

Children should be taught all safety precautions: use potholders, remove coverings carefully, pay special attention to packages of crisp food because they may be extra hot.

Don't assume that because a child has mastered one cooking skill he/she can cook everything.

Children need to learn that the microwave oven is not a toy. See page 29 for Safety Lock feature.

ABOUT FOOD

FOOD	DO	DON'T
Eggs, sausages, nuts, seeds, fruits & vegetables	• Puncture egg yolks before cooking to prevent "explosion". • Pierce skins of potatoes, apples, squash, hot dogs and sausages so that steam escapes.	• Cook eggs in shells. • Reheat whole eggs. • Dry nuts or seeds in shells.
Popcorn	• Use specially bagged popcorn for the microwave oven. • Listen while popping corn for the popping to slow to 1 or 2 seconds or use special POPCORN pad.	• Pop popcorn in regular brown bags or glass bowls. • Exceed maximum time on popcorn package.
Baby food	• Transfer baby food to small dish and heat carefully, stirring often. Check temperature before serving. • Put nipples on bottles after heating and shake thoroughly. "Wrist" test before feeding.	• Heat disposable bottles. • Heat bottles with nipples on. • Heat baby food in original jars.
General	• Cut baked goods with filling after heating to release steam and avoid burns. • Stir liquids briskly before and after heating to avoid "eruption". • Use deep bowl, when cooking liquids or cereals, to prevent boilovers.	• Heat or cook in closed glass jars or air tight containers. • Can in the microwave as harmful bacteria may not be destroyed. • Deep fat fry. • Dry wood, gourds, herbs or wet papers.

INFORMATION YOU NEED TO KNOW

ABOUT SAFETY

- Check foods to see that they are cooked to the United States Department of Agriculture's recommended temperatures.

TEMP	FOOD
160˚F	For fresh pork, ground meat, boneless white poultry, fish, seafood, egg dishes and frozen prepared food.
165˚F	For leftover, ready-to-reheat refrigerated, and deli and carry-out "fresh" food.
170˚F	White meat of poultry.
180˚F	Dark meat of poultry.

To test for doneness, insert a meat thermometer in a thick or dense area away from fat or bone. NEVER leave the thermometer in the food during cooking, unless it is approved for microwave use.

- **ALWAYS** use potholders to prevent burns when handling utensils that are in contact with hot food. Enough heat from the food can transfer through utensils to cause skin burns.
- Avoid steam burns by directing steam away from the face and hands. Slowly lift the farthest edge of a dish's covering and carefully open popcorn and oven cooking bags away from the face.
- Stay near the oven while it's in use and check cooking progress frequently so that there is no chance of overcooking food.
- **NEVER** use the cavity for storing cookbooks or other items.
- Select, store and handle food carefully to preserve its high quality and minimize the spread of food-borne bacteria.
- Keep waveguide cover clean. Food residue can cause arcing and/or fires.
- Use care when removing items from the oven so that the utensil, your clothes or accessories do not touch the safety door latches.

PART NAMES

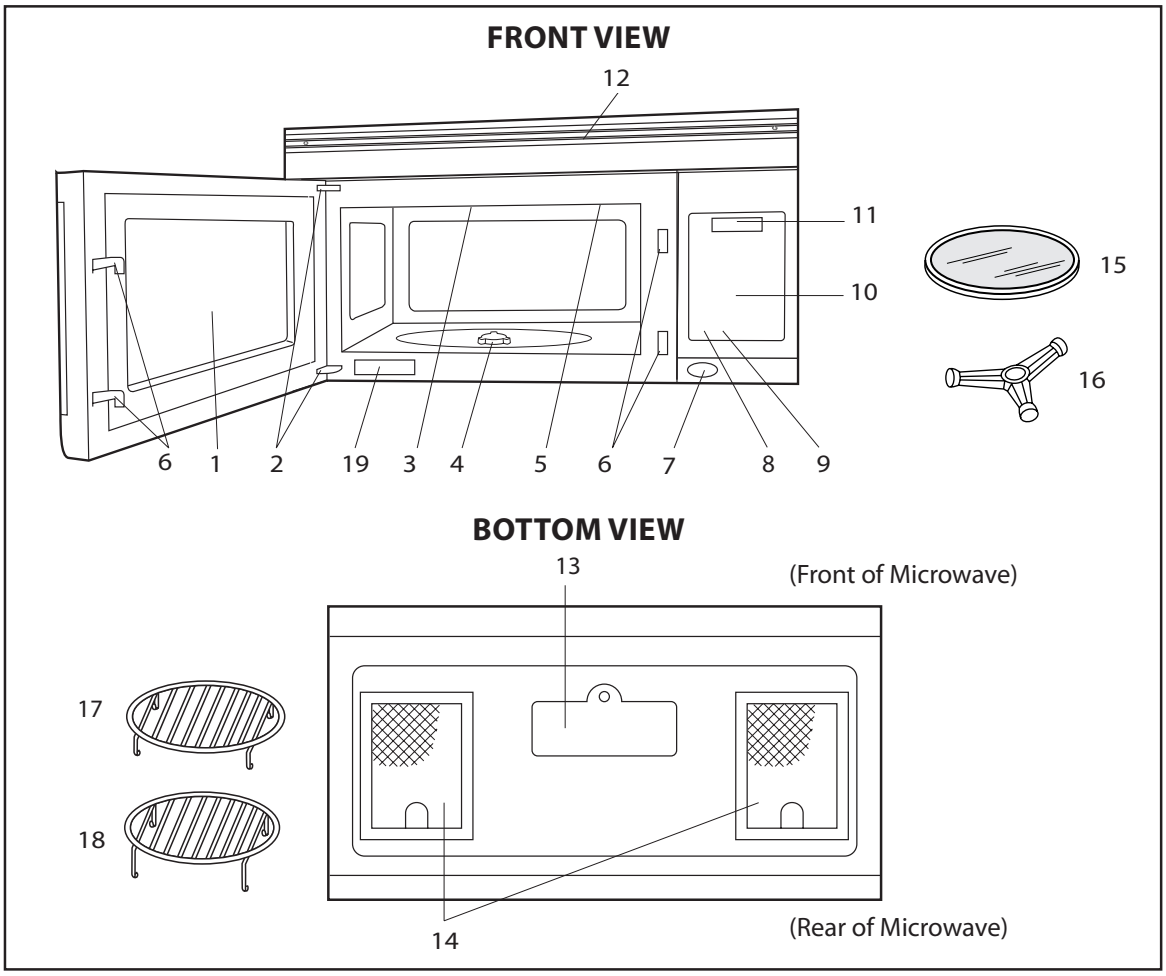

1. Oven door with see-through window.
2. Door hinges.
3. Waveguide cover
   DO NOT REMOVE.
4. Turntable motor shaft.
5. Oven light.

   It will light when oven is operating or door is open.
6. Safety door latches.

   The oven will not operate unless the door is securely closed.
7. One touch DOOR OPEN button.
   Push to open door.
8. FAN HI / LO button.
   Push for high/low/off.
9. LIGHT button.
   Push for on/off.
10. Auto-Touch control panel.
11. Time display: Digital display, 99 minutes 99 seconds.
12. Ventilation openings.
13. Light cover.
14. Grease filters.
15. Removable ceramic turntable.

    The turntable will rotate clockwise or counterclockwise. Only remove for cleaning.
16. Removable turntable support.

    Place the turntable support on the floor of the oven cavity and the turntable on the turntable support.
17. Removable low rack for broiling and meat and poultry roasting.
18. Removable high rack for two level baking.
19. Rating label

PART NAMES

CONTROL PANEL

INTERACTIVE DISPLAY
Words will light in the display to indicate features and cooking instructions.

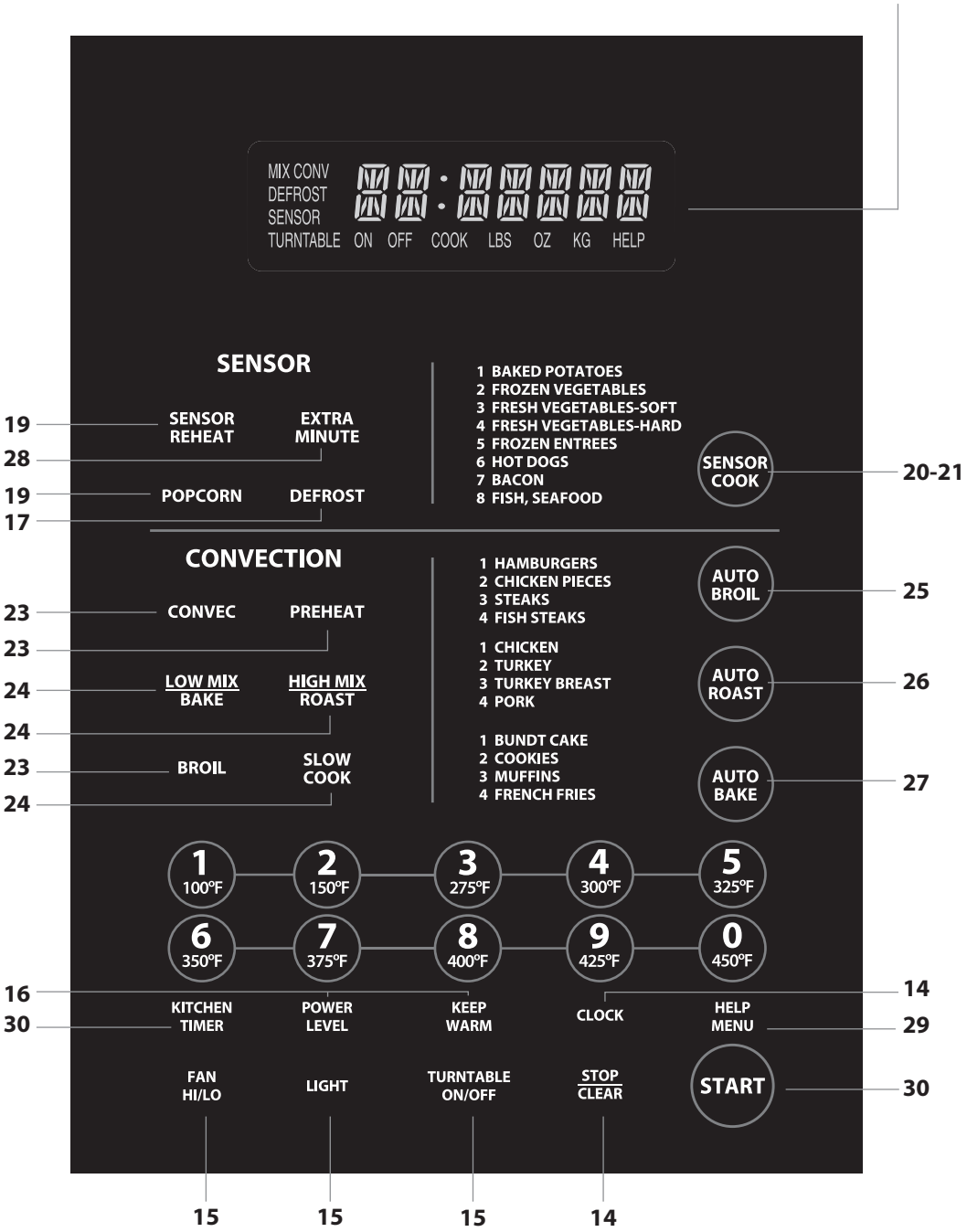

Number next to the control panel illustration indicates page on which there are feature descriptions and usage information.

BEFORE OPERATING

- Before operating your new microwave oven make sure you read and understand this use and care guide completely.
- Before the microwave oven can be used, follow these procedures:
  1. Plug in the microwave oven. Close the door. The microwave oven display will show *WELCOME PRESS CLEAR AND PRESS CLOCK*.
  2. Touch the STOP/CLEAR pad. *:* will appear.
  3. Touch CLOCK and follow directions to set.

TO SET THE CLOCK

1. Touch CLOCK pad.
2. Enter the correct time of day by touching the numbers in sequence.
3. Touch CLOCK pad again.

This is a 12 hour clock. If you attempt to enter an incorrect clock time, *ERROR* will appear in the display. Touch the STOP/CLEAR pad and re-enter the time.

- If the electrical power supply to your microwave oven should be interrupted, the display will intermittently show *WELCOME PRESS CLEAR AND PRESS CLOCK* after the power is reinstated. If this occurs during cooking, the program will be erased. The time of day will also be erased. Simply touch STOP/CLEAR pad and reset the clock for the correct time of day.

  Note: Your oven can be programmed with the door open except for START, EXTRA MINUTE, SENSOR REHEAT and POPCORN.

STOP/CLEAR

Touch the STOP/CLEAR pad to:

1. Erase if you make a mistake during programming.
2. Cancel KITCHEN TIMER.
3. Stop the microwave oven temporarily during cooking.
4. Return the time of day to the display.
5. Cancel a program during cooking, touch twice.

MANUAL MICROWAVE OPERATION

TURNTABLE ON/OFF

For most cooking, the turntable should be on; however the turntable can be turned off so that it does not rotate when extra large dishes, such as the popular 13"x9"x2" glass utility casserole, are used. The casserole should be placed on the turntable so that it is level.

- Suppose you want to cook lasagna in a 13"x9"x2" casserole for 45 minutes on 40% power.

1. Touch TURNTABLE ON/OFF pad and note *TURNTABLE OFF* in the display.
2. Enter cooking time by touching the number pads 4 5 0 0.
3. Touch POWER LEVEL pad and the number 4.
4. Touch START.

Notes:

The door can be opened for checking food and the turntable will stay in the off position. After checking, close door and touch START.

The turntable will stay off for one minute after door is opened when time-of-day appears in the display. It is possible to reprogram the oven during that minute without touching the TURNTABLE ON/OFF pad. The display always indicates whether the turntable is off or on.

THE TURNTABLE SHOULD ALWAYS BE ON WHEN USING THE SPECIAL FEATURES. On/Off function can be used with manual cooking modes and Sensor Reheat. Turntable off condition will automatically change to on condition when you select auto cooking except Sensor Reheat and Auto Bake.

When cooking large quantities of food which cannot be stirred, it is best to use a lower power level such as 40 or 50%. You may speed cooking of large amounts by programming 5 to 10 minutes on 100% power (HIGH) followed by the desired time on lower power. See page 28 for how to program multiple sequences. You may wish to reverse a large casserole once during cooking; simply open door, reposition casserole, close door and touch START.

FAN / LIGHT

Your oven is equipped with a light and a fan which can be used whether the door is open or closed.

To turn the light on, touch the LIGHT pad once. To turn the light off, touch the LIGHT pad again.

To turn the fan on, touch the FAN HI/LO pad once for high speed. To turn the fan to low speed, touch pad twice and touch the pad three times to turn the fan off.

TIME COOKING -MICROWAVE

Your oven can be programmed for 99 minutes 99 seconds (99.99). Always enter the seconds after the minutes, even if they are both zeros.

- Suppose you want to cook for 5 minutes at 100%.

1. Enter cooking time by touching the number pads 5 0 0.
2. Touch START pad.

MANUAL MICROWAVE OPERATION

KEEP WARM

KEEP WARM can only be programmed with manual cooking or as a separate program.

- Suppose you want to cook a baked potato for 4 minutes at 100% power and you want to keep it warm after cooking for 30 minutes.

1. Touch the desired cook time 4 0 0 for 1 baked potato.
2. Touch KEEP WARM pad.
3. Touch START pad.

   At the end of cook time, KEEP WARM is displayed warming food until end of 30 minutes.

To use KEEP WARM as a separate program, touch KEEP WARM pad within 1 minute after cooking, closing the door or touching the STOP/CLEAR pad.

TO SET POWER LEVEL

There are eleven preset power levels.

Using lower power levels increases the cooking time which is recommended for foods such as cheese, milk and long slow cooking of meats. Consult cookbook or recipes for specific recommendations.

TOUCH POWER LEVEL PAD ONCE THEN TOUCH	APPROXIMATE PERCENTAGE OF POWER	COMMON WORDS FOR POWER LEVELS
POWER LEVEL	100%	High
2	90%	
3	80%	
4	70%	Medium High
5	60%	
6	50%	Medium
7	40%	
8	30%	Med Low/Defrost
9	20%	
10	10%	Low
11	0%	

- Suppose you want to defrost for 5 minutes at 30% with the turntable on.

1. Enter defrosting time by touching the number pads 5 0 0.
2. Touch POWER LEVEL pad and number 3.
3. Touch START pad.

MICROWAVE FEATURES

DEFROST

DEFROST automatically defrosts ground meat, steaks, chicken pieces.

- Suppose you want to defrost a 2.0 pound steak.

1. Touch DEFROST pad once. Then touch DEFROST pad two more times to select steak.
2. Enter weight by touching the number 2 0 pads.
3. Touch START pad.

The oven will stop and directions will be displayed. Follow the indicated message.

4. After the 1st stage, open the door. Turn steak over and shield any warm portions. Close the door. Touch START pad.
5. After the 2nd stage, open the door. Shield any warm portions. Close the door. Touch START pad.
6. After defrost cycle ends, cover and let stand as indicated in chart below.

Notes:

1. The weight can be entered in increments of 0.1 lb. If you attempt to enter more or less than the allowed amount as indicated in chart, an error message will appear in the display

2. Defrost can be programmed with More or Less Time Adjustment. See page 28.

3. To defrost other foods or foods above or below the weights allowed on Defrost Chart see Manual Defrost on page 18.

DEFROST CHART

TOUCH DEFROST PAD*	FOOD	AMOUNT	PROCEDURE
Once	Ground Meat	.5 - 3.0 lb.	Remove any thawed pieces after each stage. Let stand, covered, 5 to 10 minutes.
Twice	Steaks (chops, fish)	.5 - 4.0 lb.	After each stage of defrost cycle, rearrange and if there are warm or thawed portions, shield with small flat pieces of aluminum foil. Remove any meat or fish that is nearly defrosted. Let stand, covered, 10 to 20 minutes.
3 times	Chicken pieces	.5 - 3.0 lb.	After each stage of defrost cycle, if there are warm or thawed portions, rearrange or remove. Let stand, covered, 10–20 minutes.

* Number of touches AFTER initial touch to access DEFROST.

Notes:

Check foods when oven signals. After final stage, small sections may still be icy. Let stand to continue thawing. Do not cook until all ice crystals are thawed.

Shielding prevents cooking from occurring before the center of the food is defrosted. Use small smooth strips of aluminum foil to cover edges and thinner sections of the food.

MICROWAVE FEATURES

MANUAL DEFROST

If the food that you wish to defrost is not listed on the Defrost Chart or is above or below the limits in the "Amount" column on the chart, you need to defrost manually.

You can defrost any frozen food, either raw or previously cooked, by using power level 3. Follow the exact 3-step procedure found under To Set Power Level on page 16. Estimate defrosting time and press number 3 for 30% when you select the power level.

For either raw or previously cooked frozen food, the rule of thumb is approximately 5 minutes per pound. For example, defrost 5 minutes for 2-3 cups of casserole or 1 pound of frozen spaghetti sauce.

Always stop the oven periodically to remove or separate the portions that are defrosted. If food is not defrosted at the end of the estimated defrosting time, program the oven in 1 minute increments on power level 3 until totally defrosted.

When using plastic containers from the freezer, defrost only long enough to remove from the plastic in order to place food in a microwave-safe dish.

SENSOR COOKING

The Sensor is a semi-conductor device that detects the vapor (moisture and humidity) emitted from the food as it heats. The Sensor adjusts the cooking times and power level for various foods and quantities. It takes the guesswork out of microwave cooking.

Using SENSOR Settings:

1. Room temperature should not exceed 95˚F.
2. Be sure the exterior of the cooking container and the interior of the oven are dry. Wipe off any moisture with a dry cloth or paper towel.
3. Sensor cooking can only be entered within 1 minute after cooking, opening and closing the door or touching the STOP/CLEAR pad.
4. During the first part of sensor cooking, *SENSOR REHEAT, POPCORN REGULAR SENSOR, BAKED POTATO, FROZEN VEG, SOFT FRESH VEG, HARD FRESH VEG, FROZEN ENTREE, HOT DOGS, BACON* or *FISH* will appear on display. Do not open oven door or touch STOP/CLEAR during this part of the cooking cycle. The measurement of vapor will be interrupted. If this occurs, *ERROR* will appear and sensor cooking will be interrupted. To continue cooking, touch the STOP/CLEAR pad and select cooking time and power. When sensor detects the vapor emitted from the food, remainder of cooking time will appear. Door may be opened when remaining cooking time appears on display. At this time, you may stir or season food, as desired.
5. Check food for doneness after cooking with sensor settings. If additional time is needed, continue to cook with variable power and time.
6. If the sensor does not detect vapor, *ERROR* will appear and the oven will shut off.
7. At the end of any cycle, open oven door or touch STOP/CLEAR pad. The time of day will reappear on the display.
8. Any sensor setting can be programmed with More or Less Time Adjustment. See page 28.

Selecting Foods:

1. The sensor works with foods at normal storage temperature. For example, foods for reheating would be at refrigerator temperature and potatoes for baking would be room temperature.
2. More or less food than the quantity listed in the charts should be cooked by time and variable power.

MICROWAVE FEATURES

Covering Foods:

Some foods work best when covered. Use the cover recommended in the Sensor Cooking chart for these foods.

1. Casserole lid.
2. Plastic wrap: Use plastic wrap recommended for microwave cooking. Cover dish loosely; allow approximately 1/2 inch to remain uncovered to allow steam to escape. Plastic wrap should not touch food.
3. Paper towel: Use paper towels to absorb excess fat and moisture when cooking bacon and potatoes. Line the turntable when baking potatoes.
4. Wax paper: Cover dish completely; fold excess wrap under dish to secure. If dish is wider than paper, overlap two pieces at least one inch to cover.

SENSORS

Your oven has Popcorn and Sensor Reheat. To use any of the Sensors, simply touch the chosen pad. The microwave oven will start automatically. Any sensor setting can be programmed with More or Less Time Adjustment. See page 28.

SENSOR REHEAT

Turntable on:

You can reheat many foods by touching just one pad. You don't need to calculate reheating time or power level. To reheat food with turntable on, simply touch the SENSOR REHEAT pad.

Touch SENSOR REHEAT pad. (Note : Sensor Reheat can be programmed with turntable on or off). *SENSOR REHEAT* will be displayed repeatedly. When sensor detects the vapor emitted from the food, remainder of cooking time will appear. After cooking, *LET STAND COVER* will be displayed.

Turntable off:

You may reheat using a 11"x8"x2" or 13"x9"x2" casserole with the turntable off. First touch TURNTABLE ON/OFF and note indicator. Then touch SENSOR REHEAT. The display will indicate turntable off and oven will start automatically. After cooking, *LET STAND COVER* will be displayed.

POPCORN

- Suppose you want to pop a 3.5 oz. bag of popcorn.

Touch POPCORN pad once. *SENSOR POPCORN REGULAR* be displayed repeatedly. After cooking, *END* will be displayed.

This sensor setting works well with most brands of microwave popcorn. You may wish to try several and choose your favorite. Pop only one bag at a time. Unfold the bag and place in oven according to directions.

MICROWAVE FEATURES

SENSOR CHART

FOOD	AMOUNT	PROCEDURE
Leftovers such as rice, potatoes, vegetables casserole	4-32 oz.	Place in dish or casserole slightly larger than amount to be reheated. Flatten, if possible. Cover with lid, plastic wrap or wax paper. Use covers such as plastic wrap or lids with larger quantities of more dense foods such as stews.
Soups	1-4 cups	After reheating, stir well, if possible. Foods should be very hot. If not, continue to heat with variable power and time. After stirring, recover and allow to stand 2 to 3 minutes.
Canned entrees and vegetables	4-16 oz.	Use less Time Adjustment by touching POWER LEVEL pad twice for small quantities of canned vegetables.
Dinner Plate 1 plate	3-6 oz. of meat plus vegetables and/or potato/rice	Use this pad to reheat precooked foods from the refrigerator. Place meaty portions and bulky vegetables to outside of plate. Cut large items like baked potatoes in smaller pieces. Flatten foods such as mashed potatoes and other dense foods. Cover with wax paper or plastic wrap. ONE PLATE ONLY. After cooking, check that food is very hot throughout and that the bottom center of the plate is very hot. If not, continue heating using time and power level. Allow to stand, covered, 2 to 3 minutes.
Popcorn	Only 1 package at a time	Use only popcorn packaged for microwave oven use. Try several brands to decide which you like best. Do not try to pop unpoped kernels. More or Less Time Adjustment can be used to provide adjustment needed for older popcorn or individual tastes.
	3.0-3.5 oz. bag (Regular size)	Touch POPCORN pad once. This setting works well with most 3.0-3.5 oz. bags of microwave popcorn.
	1.5-1.75 oz. bag (Snack size)	Touch POPCORN pad twice for snack size bags.

MICROWAVE FEATURES

SENSOR COOK

- Suppose you want to cook a baked potato:

1. Touch SENSOR COOK pad.
2. Select desired sensor setting. Example: Touch number pad 1 to cook baked potatoes.
3. Touch START pad. When sensor detects the vapor emitted from the food, the remainder of cooking time will appear.

Open oven door or touch STOP/CLEAR pad. The time of day will appear in the display.

SENSOR COOK CHART

FOOD	AMOUNT	PROCEDURE
1. BAKED POTATOES	1-6 medium	Pierce. Place on paper-towel-lined turntable. After cooking, remove from oven, wrap in aluminum foil and let stand 5 to 10 minutes.
2. FROZEN VEGETABLES	1-6 cups	Cover with lid or plastic wrap. After cooking, stir and let stand 3 minutes, covered.
3. FRESH VEGETABLES-SOFT		Wash and place in casserole. Add no water if vegetables have just been washed. Cover with lid for tender vegetables. Use plastic wrap for tender-crisp vegetables. Stir before standing, if possible. After cooking, let stand, covered, 2 to 5 minutes.
Broccoli	0.25-2.0 lb.	
Brussels sprouts	0.25-2.0 lb.	
Cabbage	0.25-2.0 lb.	
Cauliflower (flowerets)	0.25-2.0 lb.	
Cauliflower (whole)	1 medium	
Spinach	0.25-1.0 lb.	
Zucchini	0.25-2.0 lb.	
Baked apples	2-4 medium	
4. FRESH VEGETABLES-HARD		Place in casserole. Add 1-4 tbsp. water. Cover with lid for tender vegetables. Use plastic wrap cover for tender-crisp vegetables. Stir before standing, if possible. After cooking, let stand, covered, 2 to 5 minutes.
Carrots, sliced	0.25-1.5 lb.	
Corn on the cob	2-4 pcs	
Green beans	0.25-1.5 lb.	
Winter squash: diced	0.25-1.5 lb.	
halves	1-2	
5. FROZEN ENTREES	6-17 oz.	Use for frozen convenience food. It will give satisfactory results for most brands. You may wish to try several and choose your favorite. Remove package from outer wrapping and follow package directions for covering. After cooking, let stand, covered, for 1 to 3 minutes.
6. HOT DOGS	1-4 servings	Place hot dog in bun and wrap in paper towel or paper napkin.
7. BACON	2-6 slices	Place bacon on paper plate, lined with paper towel. Bacon should not extend over the rim of plate. Cover with paper towel.
8. FISH, SEAFOOD	0.25-2.0 lb.	Arrange in ring around shallow glass dish (roll fillet with edges underneath). Cover with vented plastic wrap. After cooking, let stand, covered, 3 minutes.

MICROWAVE FEATURES

SENSOR COOK RECIPES

Cranberry Fluff

Makes 6 to 8 servings

- 2 cups fresh cranberries
- 1 cup water
- ¾ cup sugar
- 1 carton (3 oz.) orange-flavored gelatin
- ½ pint whipping cream, whipped or
- 1 carton (8 oz.) non-dairy whipped topping

1. Combine cranberries, water and sugar in a 2-quart casserole dish. Cover with wax paper. Microwave using SENSOR REHEAT Less. Drain cranberries and reserve liquid.
2. Add enough hot water to reserved liquid to make 2 cups. Stir gelatin into hot liquid until it dissolves. Cover with wax paper. Microwave using SENSOR REHEAT Less.
3. Add berries and cool. Refrigerate until thickened. Fold whipped cream into cooled cranberry mixture. Spoon into serving dishes and garnish with extra whipped cream. Refrigerate until ready to serve.

Glazed Apple Slices

Makes 6 to 8 servings

- ¼ cup firmly-packed brown sugar
- 3 tablespoons butter or margarine
- 2 tablespoons apricot preserves
- ½ teaspoon ground nutmeg
- ¼ teaspoon salt
- ½ cup sugar
- ¾ cup orange juice
- 1 tablespoon cornstarch
- 4 baking apples (about 1½ lbs), peeled and sliced into 8 pieces each
- 3 tablespoons chopped green pistachios

1. Combine brown sugar, butter and apricot preserves in a small bowl. Microwave at HIGH (100%) 45 seconds to 1 minute, until butter melts and preserves soften. Stir in nutmeg, salt, sugar, orange juice and cornstarch. Microwave at HIGH (100%), 4 to 6 minutes or until thickened, stirring several times.
2. Arrange apple slices in a large microwave serving dish. Spread hot sauce over apples. Cover well with vented wax paper. Microwave using FRESH VEGETABLES-SOFT. Allow to cool 5 minutes before serving.
3. Sprinkle with pistachios. Serve alone or over vanilla ice cream or sponge cake.

Savory Flounder Fillets

Makes 4 servings

- ¾ cup corn flake crumbs
- 3 tablespoons chopped parsley
- 2 teaspoons grated lemon peel
- ½ teaspoon paprika
- 1 pkg. (1 lb.) flounder fillets
- 1 egg, slightly beaten
- Tarter or cocktail sauce, optional

1. On wax paper, combine crumbs, parsley, lemon peel and paprika. Dip fillets in beaten egg, then coat with crumb mixture.
2. Place fish in a covered, microwave-safe baking dish. Microwave using FISH, SEAFOOD.
3. Serve with tartar or cocktail sauce, if desired.

MANUAL CONVECTION AND AUTOMATIC MIX OPERATION

This section gives you specific cooking instructions and procedures. The oven should not be used without the turntable in place, and it should never be restricted so that it cannot rotate. You may remove the turntable when preheating the oven and when preparing food to be cooked directly on the turntable.

Caution: The oven cabinet, cavity, door, turntable, turntable support, racks and dishes will become hot. To PREVENT BURNS, use thick oven gloves when removing the food or turntable from the oven.

CONVECTION COOKING

During convection heating, hot air is circulated throughout the oven cavity to brown and crisp foods quickly and evenly. This oven can be programmed for ten different convection cooking temperatures for up to 99 minutes, 99 seconds.

TO COOK WITH CONVECTION

- Suppose you want to cook at 350˚F for 20 minutes.

1. Touch CONVEC pad.
2. Select temperature by touching number pad [6 350˚F].
3. Enter cooking time by touching number pads [2][0][0][0].
4. Touch START pad.

TO PREHEAT AND COOK WITH CONVECTION

Your oven can be programmed to combine preheating and convection cooking operations. You can preheat at the same temperature as the convection temperature or change it to a higher or lower temperature.

- Suppose you want to preheat until 350˚F and then cook 25 minutes at 375˚F convection.

1. Touch PREHEAT pad.
2. Select temperature by touching number pad [6 350˚F].
3. Touch CONVEC pad.
4. Select temperature by touching number pad [7 375˚F].
5. Enter cooking time by touching number pads [2][5][0][0].
6. Touch START pad.

When the oven reaches the programmed temperature, it will automatically hold at the preheat temperature for 30 minutes and then the display will change to time of day. Whenever STOP/CLEAR pad is touched during this 30 minute period, press CONVEC or press MIX will be displayed and cooking mode and time can be entered.

Note: To preheat and cook with the same temperature, enter same temperature in steps 2 and 3.

BROIL

In the BROIL setting, preheating is automatic. Just enter the actual broiling time and wait for preheat to be over before adding food. (Preset 450˚F). Oven temperature cannot be changed.

- Suppose you want to broil a ham steak for 15 minutes.

1. Touch BROIL pad.
2. Enter cooking time by touching number pads [1][5][0][0].
3. Touch START pad.

MANUAL CONVECTION AND AUTOMATIC MIX OPERATION

SLOW COOK

Slow Cook is a preset at 300˚F. Slow Cook is programmed for 4 hours. Oven temperature can be changed to temperature below 300˚F. Simply touch the SLOW COOK pad and touch the desired numbered pad with temperature below 300˚F.

1. Touch SLOW COOK pad.
2. Touch START pad. The oven begins counting and continues to 4 hours.

AUTOMATIC MIX COOKING

This oven has two pre-programmed settings that make it easy to cook with both convection heat and microwave automatically.

	OVEN TEMPERATURE	MICROWAVE POWER
HIGH MIX	325˚F	30%
LOW MIX	325˚F	10%

With the exception of those foods that cook best by convection heating alone, most foods are well suited to mix cooking using either LOW MIX/BAKE or HIGH MIX/ROAST.

The marriage of these two cooking methods produces juicy meats, moist and tender cakes and fine textured breads, all with just the right amount of browning and crispness.

The temperature can be changed; however, the microwave power cannot.

The oven temperature can be changed from 100˚F to 450˚F. To change the temperature, first touch HIGH MIX or LOW MIX, then touch the same pad again. When the display says *SELECT TEMP*, touch desired temperature pad. Ex: HIGH MIX, HIGH MIX, pad [7] and START. The mix temperature will change automatically.

TO COOK WITH AUTOMATIC MIX

- Suppose you want to bake a cake at low mix for 20 minutes.

1. Touch LOW MIX/BAKE pad.
2. Enter cooking time by touching number pads [2][0][0][0].
3. Touch START pad.

TO PREHEAT AND COOK WITH AUTOMATIC MIX

Your oven can be programmed to combine preheating and automatic mix cooking operations. You can preheat at the same temperature as the preset combination temperature or change it to a different temperature.

- Suppose you want to preheat to 350˚F and then cook 25 minutes on 300˚F LOW MIX/BAKE:

1. Touch PREHEAT pad.
2. Touch temperature pad [6 350˚F].
3. Touch LOW MIX pad. Touch LOW MIX pad once more to change the cooking temperature.
4. Touch temperature pad [4 300˚F].
5. Enter cooking time by touching number pads [2][5][0][0].
6. Touch Start pad.

At the end of the baking time, 1 long tone will sound and *END* will be displayed.

CONVECTION AUTOMATIC MIX FEATURES

This section of the Use and Care Guide offers instructions for preparing 12 popular foods using AUTO BROIL, AUTO ROAST and AUTO BAKE.

After selecting the desired feature, follow the directions indicated in the display.

For helpful hints, simply touch HELP MENU anytime HELP is lighted in the display.

Caution: The oven cabinet, cavity, door, turntable, turntable support, racks and dishes will become hot. To PREVENT BURNS, use thick oven gloves when removing the food or turntable from the oven.

AUTO BROIL

AUTO BROIL automatically broils hamburgers, chicken pieces, steaks and fish steaks.

- Suppose you want to broil 2 hamburgers.

1. Touch AUTO BROIL pad.
2. Select desired setting. Example: for hamburgers, touch number pad 1.
3. Touch number pad to enter quantity. Example: 2. Follow information in display for cooking information.

For well done or rare burgers, touch POWER LEVEL pad to select More for well done or Less for rare. See More or Less Time Adjustment on page 28.

4. Touch START pad.

After broil preheat cycle ends, the oven will stop and directions will be displayed. Follow the indicated message. Open the door and place hamburgers into oven. Close the door.

5. Touch START pad.

Notes:

1. AUTO BROIL can be programmed with More or Less Time Adjustment. See page 28.

2. If you attempt to enter more or less than the allowed amount as indicated in chart below, an error message will appear in the display.

3. To broil other foods or foods above or below the weight or number allowed on AUTO BROIL Chart, see Convection Broiling Chart.

AUTO BROIL CHART

SETTING/FOOD	AMOUNT	PROCEDURE
1. HAMBURGERS	1-8 pieces 1/4 lb. each	Use this setting to broil hamburger patties. Place on low rack.
2. CHICKEN PIECES	0.5-3.0 lb.	Arrange pieces on low rack. After cooking, let stand, 3-5 minutes. Dark meat should be 180˚F, and white meat should be 170˚F.
3. STEAKS	0.5-2.0 lb.	Use this setting to broil steaks from 3/4" to 1" thick. Individual boneless steaks broil evenly. Place steak on low rack. For well done, touch POWER LEVEL once; for rare, touch POWER LEVEL twice.
4. FISH STEAKS	0.5-2.0 lb.	Use this setting to broil fish steak which is 3/4" to 1" thick. Place on low rack.

CONVECTION AUTOMATIC MIX FEATURES

AUTO ROAST

AUTO ROAST automatically roasts chicken, turkey, turkey breast or pork.

- Suppose you want to roast a 2.5 pound chicken.

1. Touch AUTO ROAST pad.
2. Select desired setting. Example: For chicken, touch number pad [1].
3. Touch number pads [2][5] to enter weight.
4. Touch START pad.

After AUTO ROAST cycle ends, a long tone will sound. Follow the indicated message.

Notes:

1. AUTO ROAST can be programmed with More or Less Time Adjustment. See page 28.

2. If you attempt to enter more or less than the allowed weight as indicated in chart below, an error message will appear in the display.

3. To roast other food or foods above or below the weights allowed on AUTO ROAST Chart, check Combination Roasting Chart.

AUTO ROAST CHART

SETTING/FOOD	AMOUNT	RACK	PROCEDURE
1. CHICKEN	2.5-7.0 lb.	Low	After the cycle ends, cover with foil and let stand for 5-10 minutes. Internal temperature of white meat should be 170˚F and of dark meat, 180˚F.
2. TURKEY (unstuffed)	6.5-9.0 lb.	Low	Season, as desired. Place on low rack. After the cycle ends, cover with foil and let stand 10 minutes. Internal temperature of white meat should be 170˚F and of dark meat, 180˚F.
3. TURKEY BREAST	3.0-6.0 lb.	Low	Season, as desired. Place on low rack. After the cycle ends, cover foil and let stand 10 minutes. Internal temperature of white meat should be 170˚F.
4. PORK	2.0-3.5 lb.	Low	Boneless pork loin is recommended because it cooks evenly. Place on low rack. After cooking, remove from oven, cover with foil and allow to stand 5-10 minutes. Internal temperature should be 160˚F.

CONVECTION AUTOMATIC MIX FEATURES

AUTO BAKE

AUTO BAKE automatically bakes cakes, brownies, muffins and French fries.

- Suppose you want to bake a 13”x9”x2” cake.

1. Touch AUTO BAKE pad.

   Note: Turntable function is automatically turned OFF.

2. Select desired setting. Example: For cake, touch number pad 1.
3. Touch START pad.
4. After Auto Bake preheat cycle ends, 4 tones will sound. Follow the indicated message. Open door. Place the cake pan inside. Close door and touch START.

After AUTO BAKE cycle ends, 1 long tone will sound, and *END* will be displayed.

Note: AUTO BAKE can be programmed with More or Less Time Adjustment. *See page 28.*

AUTO BAKE CHART

SETTING/FOOD	PAN SIZE/QTY	RACK	PROCEDURE
1. CAKE	13”x9”x2”	Low	Ideal for packaged cake mix or your own recipe for 13”x9”x2” pan. Prepare according to package or recipe directions and place in a greased and floured 13”x9”x2” baking pan. After the preheat is over, place pan in oven centered on low rack. Cool before frosting and serving.
2. BROWNIES	13”x9”x2”	Low	Ideal for packaged brownie mix or your own recipe for 13”x9”x2” pan. Prepare according to package or recipe directions and place in a greased and floured 13”x9”x2” baking pan. After the preheat is over, place pan in oven centered on low rack. Cool before cutting into serving pieces.
3. MUFFINS	12 cup Muffin pan	Low	Ideal for packaged muffin mix or your own recipe for 12 medium size muffins. Prepare according to package or recipe directions and place in one 12-cup muffin pan. After the preheat is over, place pan in oven centered on low rack.
4. FRENCH FRIES	3 - 24 oz. Cookie sheet to hold	Low	Use frozen prepared French fries. No preheat is required for the French fries baking procedure. Place French fries on cookie sheet on low rack. For shoestring potatoes, touch POWER LEVEL pad twice to enter less time before touching START pad.

OTHER CONVENIENT FEATURES

MULTIPLE SEQUENCE COOKING

The oven can be programmed for up to 4 automatic cooking sequences for the microwave mode and 3 automatic cooking sequences for convection mode, switching from one setting to another automatically.

Sometimes cooking directions tell you to start on one power level and then change to a different power level. Your oven can do this automatically.

- Suppose you want to cook roast beef for 5 minutes at 90% and then continue to cook for 30 minutes at 50%.

1. Touch POWER LEVEL pad once.
2. Touch number pad [9] for 90% power.
3. Enter cooking time by touching number pads [5][0][0].
4. Touch POWER LEVEL pad again.
5. Touch number pad [5] for 50% power.
6. Enter cooking time by touching number pads [3][0][0][0].
7. Touch START pad.

Notes:

1. If POWER LEVEL pad is touched twice, HIGH will be displayed.

2. If 100% is selected as the final sequence, it is not necessary to touch the POWER LEVEL pad.

3. If you wish to know power level, simply touch the POWER LEVEL pad. As long as your finger is touching the POWER LEVEL pad, the power level will be displayed.

MORE OR LESS TIME ADJUSTMENT

More: Should you discover that you like any of the DEFROST, AUTO ROAST, AUTO BAKE, AUTO BROIL, SENSOR COOK or Sensor settings slightly more done, touch the POWER LEVEL pad once after touching your choice of pads.

Less: Should you discover that you like any of the DEFROST, AUTO ROAST, AUTO BAKE, AUTO BROIL, SENSOR COOK or Sensor settings slightly less done, touch the POWER LEVEL pad twice after touching your choice of pads.

EXTRA MINUTE

EXTRA MINUTE allows you to cook for a minute at 100% by simply touching the EXTRA MINUTE pad. You can also extend cooking time in multiples of 1 minute by repeatedly touching the EXTRA MINUTE pad during manual cooking using microwave, convection, mix or broil.

- Suppose you want to heat a cup of soup for one minute.

Touch EXTRA MINUTE pad.

Notes:

1. Touch EXTRA MINUTE pad within 1 minute after cooking, closing the door, touching the STOP/CLEAR pad or during cooking. EXTRA MINUTE cannot be used to start the oven if any program is on display.

2. EXTRA MINUTE cannot be used with SENSOR, SENSOR COOK, DEFROST, AUTO BROIL, AUTO ROAST or AUTO BAKE.

HELP (DISPLAY INDICATOR)

Each setting of DEFROST, AUTO BROIL, AUTO ROAST, AUTO BAKE, SENSOR and SENSOR COOK has a cooking hint. If you wish to check, touch HELP MENU whenever HELP is lighted in the Interactive Display.

OTHER CONVENIENT FEATURES

HELP MENU

Help Guide provides 5 features which make using your oven easy because specific instructions are provided in the Interactive Display.

1. Safety Lock

The Safety Lock prevents unwanted oven operation such as by small children. Note: Safety Lock is not applicable to FAN and LIGHT buttons.

The oven can be set so that the control panel is deactivated or locked. To set, touch HELP MENU, the number 1 and START pad. Should a pad be touched, *LOCK* will appear in the display.

To cancel, touch HELP MENU, the number 1 and STOP/CLEAR.

2. Audible Signal Elimination

If you wish to have the oven operate with no audible signal, touch HELP MENU, the number 2 and STOP/CLEAR.

To cancel and restore the audible signal, touch HELP MENU, the number 2 and START.

3. Auto Start

If you wish to program your oven to begin cooking automatically at a designated time of day, follow this procedure:

- Suppose you want to start cooking a stew for 20 minutes on 50% at 4:30. Before setting, check to make sure the clock is set correctly.

1. Touch HELP MENU pad.
2. Touch number 3 to select the Auto Start.
3. To enter the start time at 4:30, touch numbers 4 3 and 0.
4. Touch CLOCK pad.
5. To enter cooking program, touch POWER LEVEL, number 5 and then touch numbers 2 0 0 and 0 for cooking time.
6. Touch START pad.

Notes:

1. Auto Start can be used for manual cooking, AUTO BROIL, AUTO ROAST, AUTO BAKE, if clock is set.

2. If the microwave oven door is opened after programming Auto Start, it is necessary to touch the START pad for Auto Start time to appear in the readout so that the microwave oven will automatically begin programmed cooking at the chosen Auto Start time.

3. Be sure to choose foods that can be left in the oven safely until the Auto Start time. Baked potatoes are often a good choice.

4. Language Selection

The oven comes set for English language. To change, touch HELP MENU and the number 4. Continue to touch the number 4 until your choice is selected. Then touch START pad.

Touch number 4 once for English.

Touch number 4 twice for Spanish.

Touch number 4 three times for French.

OTHER CONVENIENT FEATURES

5. Weight/Temp Selection

The oven comes set for U.S. Customary Unit-pounds. To change, touch HELP MENU and the number 5. Continue to touch the number 5 until your choice is selected. Then, touch START pad.

Touch number 5 once for LB. / ˚F.

Touch number 5 twice for KG. / ˚C.

START

START allows you to cook at 100% power by touching the START continuously. START is ideal for melting cheese, bringing milk to just below boiling etc. The maximum cooking time is 3 minutes.

- Suppose you want to melt cheese on a piece of toast.

1. Continuously touch the START pad. The cooking time will begin counting up.
2. When the cheese is melted to desired degree, remove finger from START pad. Microwave oven stops immediately.

   Notes:

   1. Note time it takes for frequently used foods and program that time in the future.

   2. To use START, touch pad within 1 minute after cooking, opening and closing the door or touching the STOP/CLEAR pad.

   3. START can only be used 3 times in a row. If more times are needed, open and close door or touch STOP/CLEAR.

KITCHEN TIMER

- Suppose you want to time a 3 minute long distance phone call.

1. Touch KITCHEN TIMER pad.
2. Enter time by touching the number pads 3 0 0.
3. Touch START pad.

DEMONSTRATION MODE

To demonstrate, touch CLOCK, the number 0 and then touch START pad and hold for 3 seconds. *DEMO ON DURING DEMO NO OVEN POWER* and *DEMO* will appear in the display. Cooking operations and specific special features can now be demonstrated with no power in the microwave oven. For example, touch EXTRA MINUTE pad and the display will show *1.00* and count down quickly to *END*.

To cancel, touch CLOCK, then the number 0 and STOP/CLEAR pads.

CLEANING AND CARE

Disconnect the power cord before cleaning or leave the door open to inactivate the microwave oven during cleaning.

EXTERIOR

The outside surface is precoated metal and plastic. Clean the outside with mild soap and water; rinse and dry with a soft cloth. Do not use any type of household or abrasive cleaner.

DOOR

Wipe the window on both sides with a damp cloth to remove any spills or spatters. Metal parts will be easier to maintain if wiped frequently with a damp cloth. Avoid the use of spray and other harsh cleaners as they may stain, streak or dull the door surface.

TOUCH CONTROL PANEL

Care should be taken in cleaning the touch control panel. If the control panel becomes soiled, open the microwave oven door before cleaning. Wipe the panel with a cloth dampened slightly with water only. Dry with a soft cloth. Do not scrub or use any sort of chemical cleaners. Close door and touch STOP/ CLEAR pad.

INTERIOR - AFTER MICROWAVE COOKING

The oven walls, ceiling and floor are stainless steel. Cleaning after microwave cooking is easy because no heat is generated to the interior surfaces; therefore, there is no baking and setting of spills or spattering. To clean the interior surfaces, wipe with a soft cloth and warm water. DO NOT USE ABRASIVE OR HARSH CLEANERS OR SCOURING PADS. For heavier soil, use mild soap; rinse thoroughly with hot water.

INTERIOR - AFTER CONVECTION, MIX OR BROIL COOKING

Spatters may occur because of moisture and grease. Wash immediately after use with hot, soapy water. Rinse and polish dry. Harder to remove spatters may occur if oven is not thoroughly cleaned or if there is long time/high temperature cooking. If so, you may wish to purchase an oven cleaner pad with liquid cleaner within it—not a soap filled steel pad—for use on stainless or porcelain surfaces. Follow manufacturer's directions carefully and be especially cautious not to get any of the liquid cleaner in the perforations on the wall or ceiling or any door surfaces. Rinse thoroughly and polish dry.

WAVEGUIDE COVER

The waveguide cover is located on the ceiling in the oven cavity. It is made from mica so requires special care. Keep the waveguide cover clean to assure good oven performance. Carefully wipe with a damp cloth any food spatters from the surface of the cover immediately after they occur. Built-up splashes may overheat and cause smoke or possibly catch fire. DO NOT REMOVE THE WAVEGUIDE COVER.

ODOR REMOVAL

Occasionally, a cooking odor may remain in the oven. To remove, combine 1 cup water, grated peel and juice of 1 lemon and several whole cloves in a 2-cup glass measuring cup. Boil for several minutes using 100% power. Allow to set in oven until cool. Wipe interior with a soft cloth.

TURNTABLE/TURNTABLE SUPPORT

The ceramic turntable and turntable support can be removed for easy cleaning. Wash them in mild, sudsy water; for stubborn stains use a mild cleanser and scouring sponge as described above. They are also dishwasher-safe using top rack.

CLEANING AND CARE

OVEN RACKS

The high and low baking racks can be removed for easy cleaning and stored away from the microwave oven when racks are not needed. After each use, wash them in mild, sudsy water. For any stubborn stains, use a mild kitchen cleanser and scouring sponge as described above. They are dishwasher-proof.

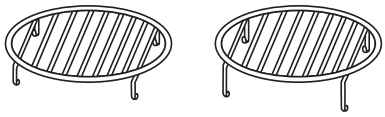

GREASE FILTERS

Filters should be cleaned at least once a month. Never operate the fan or oven without the filters in place.

1. Pull the tab toward the front of the oven, down slightly and remove the filter. Repeat for the other filter.
2. Soak the filters in a sink or dish pan filled with hot water and detergent. DO NOT use ammonia or other alkali; they will react with the filter material and darken it.
3. Agitate and scrub with a brush to remove embedded dirt.
4. Rinse thoroughly and shake dry.
5. Replace by fitting the filter back into the opening.

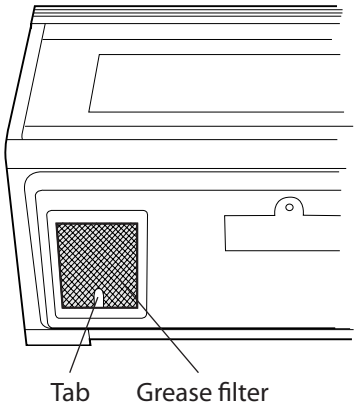

FAN

The fan will automatically start when heat rises from range surface units or burners and when CONVECTION, HIGH MIX, LOW MIX or the BROIL settings are used. This protects the microwave oven from excessive temperature rise. The fan will stay on until the temperature decreases. It cannot be turned off manually during this time.

For other uses, select either high or low speed.

Precautions For Proper Use:

1. DO NOT leave range unattended while using high temperatures. Automatic fan may start and provide excessive air to the surface units. This may cause spattering or boilover.
2. Avoid burning food.
3. Keep grease filters clean.

LIGHT

1. To replace light bulbs, first disconnect power to the oven at the circuit breaker panel or by unplugging.
2. To release cover remove the screw on the light cover. (See illustration.)
3. Replace bulbs only with 20 watt bulbs available from a Fisher & Paykel Authorized Servicer or parts distributor. Bulbs are also available at most hardware stores or lighting centers. DO NOT USE A BULB LARGER THAN 30 WATTS.

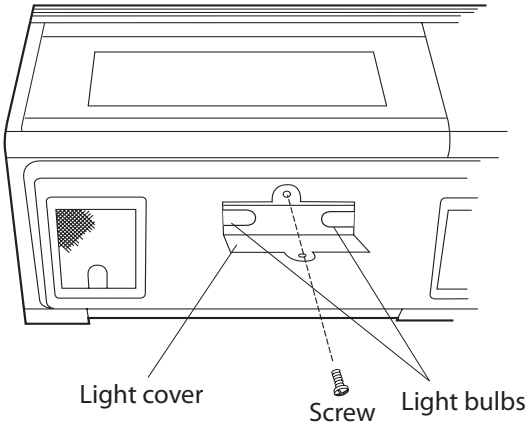

4. Close light cover and secure with screw removed in step 2.

CAUTION: Light cover may become very hot. Do not touch glass when light is on. Do not use light for long time use such as a night light.

CLEANING AND CARE

CHARCOAL FILTER

Charcoal Filter is used for No-vented, recirculated installation. The filter should be changed every 6 to 12 months depending on use.

1. Disconnect power to the oven at the circuit breaker panel or by unplugging.
2. Remove 3 screws that secure louver.
3. Pull the louver away from the oven.
4. Slide Charcoal Filter into position on support tabs.
5. Push louver back into place and gently snap tabs into place by hand and replace the 2 screws to secure louver.

OVEN LIGHT

Remove the louver per instructions 1-3 above and charcoal filter, if used.

4. Slide the light cover forward and lift up.
5. Remove old light bulb and replace only with 20 watt bulb available from a Fisher & Paykel Authorized Servicer or parts distributor. Bulbs are also available at most hardware stores or lighting centers. DO NOT USE A BULB LARGER THAN 30 WATTS.
6. Replace the oven light cover and charcoal filter, if used; push louver back in place and replace the louver mounting screws.

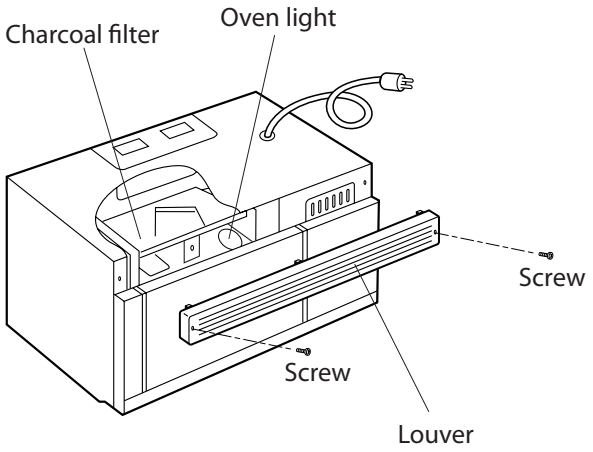

SERVICE CALL CHECK

Please check the following before calling for service:

1. Place one cup of water in a glass measuring cup in the oven and close the door securely.

   Operate the oven for two minutes at HIGH 100%.

   A. Does the light come on in the oven? YES _____ NO _____

   B. Does the cooling fan work? (Put your hand over the top ventilation openings.) YES _____ NO _____

   C. Does the turntable rotate when the TURNTABLE ON/OFF pad is touched and TURNTABLE ON is in the display? (It is normal for the turntable to turn in either direction when TURNTABLE ON is in the display.) YES _____ NO _____

   D. Is the water in the oven warm? YES _____ NO _____

2. Remove the water from the oven and program: CONVEC, 0 (450°F), 5 0 0, START

   A. Do CONV and COOK light? YES _____ NO _____

   B. After the oven shuts off, is the inside of the oven hot? YES _____ NO _____

If "NO" is the answer to any of the above questions, please check electrical outlet, fuse and/or circuit breaker If either or both are not functioning properly, CONTACT YOUR NEAREST Fisher & Paykel AUTHORIZED SERVICER. A microwave oven should never be serviced by a "do-it-yourself" repair person.

Note: If time appearing in the display is counting down very rapidly, check Demonstration Mode on page 29 and cancel.

For warranty service, please contact your local service provider or our Customer Care Representative at (888) 936-7872. Before you call, please have the following information ready:

- Model Number_____ (located on the bottom left corner of the cavity face)
- Serial Number _____ (located on the bottom left corner of the cavity face)
- Date of installation _____
- A brief description of the problem

Your satisfaction is of the utmost importance to us. If a problem cannot be resolved to your satisfaction, please write or email us at:

Write:

Fisher & Paykel Appliances, Inc.
Attention: Customer Care
5900 Skylab Road
Huntington Beach, CA 92647

email: customer.care@fisherpaykel.com

SPECIFICATIONS

AC Line Voltage:	UL Rating CSA Rating	- -	Single phase 120V, 60Hz, AC only Single phase 116V, 60Hz, AC only
AC Power Required:	UL Rating CSA Rating	- -	1600 W 13.2 amps. 1500 W 13.0 amps.
Output Power Microwave:	850 W* (IEC Test Procedure)		
Convection Heater:	1400 W		
Frequency:	2450 MHz		
Outside Dimensions:	29 15/16" (W) x 16 11/32" (H) x 15 9/32" (D)		
Cavity Dimensions:	17 1/8" (W) x 8 1/16" (H) x 13 13/16" (D)		
Oven Capacity:	1.1 cu. ft.		
Cooking Uniformity:	Turntable & Stirrer Fan		
Weight:	Approx. 71 lbs		

* The International Electrotechnical Commission's standardized method for measuring output wattage. This test method is widely recognized.

In compliance with standards set by:

FCC – Federal Communications Commission Authorized.

DHHS – Complies with Department of Health and Human Services (DHHS) rule, CFR, Title 21, Chapter I, Subchapter J.

c UL us – This symbol on the nameplate means the product is listed by Underwriters Laboratories, Inc. for use in USA or Canada.

WARRANTY

LIMITED WARRANTY

When you purchase a new Convection Microwave, you automatically receive a One Year Limited Warranty covering parts and labor for the entire product, a Five Year Limited Warranty, with respect to the magnetron tube in the Product, (parts only, labor and service are not provided free of charge for this additional period) for servicing within the 48 mainland United States, Hawaii, Washington D.C. and Canada. In Alaska the Limited Warranty is the same except that you must pay to ship the Product to the service shop or the service technician's travel to your home. Products for use in Canada must be purchased through the Canadian distribution channel to ensure regulatory compliance.

FISHER & PAYKEL UNDERTAKES TO:

Repair without cost to the owner either for material or labor any part of the Product, the serial number of which appears on the Product, which is found to be defective. In Alaska, you must pay to ship the Product to the service shop or for the service technician's travel to your home.

If we are unable to repair a defective part of the Product after a reasonable number of attempts, at our option we may replace the part or the Product, or we may provide you a full refund of the purchase price of the Product (not including installation or other charges).

This warranty extends to the original purchaser and any succeeding owner of the Product for products purchased for ordinary single-family home use. All service under this Limited Warranty shall be provided by Fisher & Paykel Appliances Inc. or its Authorized Service Agent during normal business hours.

HOW LONG DOES THIS LIMITED WARRANTY LAST?

Our liability under this Limited Warranty for the entire product expires One Year from the date of purchase of the Product by the first consumer. Our liability under this Limited Warranty for surface burners, griddle burners, grill burner and oven burners (parts only) expires Five Years from the date of the purchase of the Product by the first customer. Our liability under this Limited Warranty for the porcelain oven liner and porcelain inner door panel (parts only) expires Two Years from the date of the purchase of the Product by the first customer.

Our liability under any implied warranties, including the implied warranty of merchantability (an unwritten warranty that the Product is fit for ordinary use) also expires One Year (or such longer period as required by applicable law) from the date of purchase of the Product by the first consumer. Some states do not allow limitations on how long an implied warranty lasts, so this limit on implied warranties may not apply to you.

THIS WARRANTY DOES NOT COVER:

A. Service calls that are not related to any defect in the Product. The cost of a service call will be charged if the problem is not found to be a defect of the Product. For example:

1. Correct faulty installation of the Product.
2. Instruct you how to use the Product.
3. Replace house fuses, reset circuit breakers, correct house wiring or plumbing, or replace light bulbs.
4. Correct fault (s) caused by the user.
5. Change the set-up of the Product.
6. Unauthorized modifications of the Product.
7. Noise or vibration that is considered normal, for example, drain/fan sounds, regeneration noises or user warning beeps.
8. Correcting damage caused by pests, for example, rats, cockroaches etc.

WARRANTY

B. Defects caused by factors other than:

   1. Normal domestic use or
   2. Use in accordance with the Product's Use and Care Guide.

C. Defects to the Product caused by accident, neglect, misuse, fire, flood or Act of God.

D. The cost of repairs carried out by non-authorized repairers or the cost of correcting such unauthorized repairs.

E. Travel Fees and associated charges incurred when the product is installed in a location with limited or restricted access. (i.e. airplane flights, ferry charges, isolated geographic areas).

F. Normal recommended maintenance as set forth in the Product's Use and Care Guide.

If you have an installation problem contact your dealer or installer. You are responsible for providing adequate electrical, exhausting and other connection facilities.

We are not responsible for consequential or incidental damages (the cost of repairing or replacing other property damaged if the Product is defective or any of your expenses caused if the Product is defective). Some states do not allow the exclusion or limitation of incidental or consequential damages, so the above limitation or exclusion may not apply to you.

HOW TO GET SERVICE

Please read your Use and Care Guide. If you then have any questions about operating the Product, need the name of your local Authorized Service Agent, or believe the Product is defective and wish service under this Limited Warranty, please contact your dealer or call us at:

TOLL FREE (888) 936-7872 or contact us through our web site:

For Fisher & Paykel brand: www.fisherpaykel.com
For DCS brand: www.dcsappliances.com

You may be required to provide reasonable proof of the date of purchase of the Product before the Product will be serviced under this Limited Warranty.

COMMERCIAL USE

This warranty applies to appliances used in residential applications; it does not cover their use in commercial situations.

NO OTHER WARRANTIES

This Limited Warranty is the complete and exclusive agreement between you and Fisher & Paykel Appliances Inc. regarding any defect in the Product. None of our employees (or our Authorized Service Agents) are authorized to make any addition or modification to this Limited Warranty.

Warrantor: Fisher & Paykel Appliances, Inc.

If you need further help concerning this Limited Warranty, please call us at the above number, or write to:

Fisher & Paykel Appliances, Inc.
5900 Skylab Road, Huntington Beach, CA 92647

This Limited Warranty gives you specific legal rights, and you may also have other rights which vary from state to state.

Fisher & Paykel Appliances Inc. is a leading manufacturer of premium quality cooking and specialty appliances under the Fisher & Paykel and DCS brands.

Fisher&Paykel

DCS by Fisher&Paykel

Quality provided by Fisher & Paykel Appliances Inc.

Fisher & Paykel Appliances, Inc.
5900 Skylab Road, Huntington Beach, CA 92647
Customer Care: 888.936.7872
Fax: 714.372.7003

www.fisherpaykel.com
www.dcsappliances.com

As product improvement is an ongoing process, we reserve the right to change specifications or design without notice.

Nous améliorons constamment ses produits et se réserve le droit de modifier les spécifications ou la conception de ses produits sans aucun préavis.

TINSEB516MRK0
P/N243709 RA 09/08