This Owner's Manual is provided and hosted by Appliance Factory Parts.

Appliance Factory Parts
Experts in BBQ, Humidifier, & Appliance Parts
1-800-955-7075

FISHER & PAYKEL CMOH-30SS Owner's Manual

Shop genuine replacement parts for FISHER & PAYKEL CMOH-30SS

Find Your FISHER & PAYKEL Microwave Parts - Select From 4 Models

-------- Manual continues below --------

OVER THE RANGE CONVECTION MICROWAVE OVEN
INSTALLATION INSTRUCTIONS

Please read all instructions thoroughly before installing the Over the Range Microwave Oven/Hood System. Two people are recommended to install this product.

If a new electrical outlet is required, its installation should be completed by a qualified electrician before the microwave oven is installed. See 3 ELECTRICAL GROUNDING INSTRUCTIONS on page 2.

1. MOUNTING SPACE

This Microwave Oven/Hood requires a mounting space on a wall as shown in Figure 1.

If the space between the wall cabinets is greater than 30-inches (36-inches or 42-inches), a Filler Panel Kit may be used to fill the gap between the Microwave Oven/Hood system and wall cabinets. The Filler Panel Kit is sold as an optional accessory; each kit contains two 3-inch panels. The Filler Panel Kit should be installed before the Microwave Oven/Hood is installed.

For proper installation and servicing, a 2-inch space is necessary between the top of the range backsplash and the bottom of the Microwave Oven/Hood system.

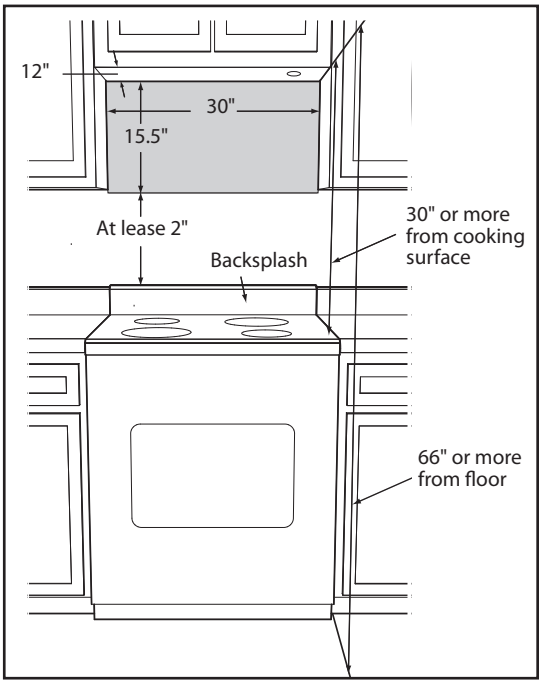

Figure 1

2. WALL CONSTRUCTION

This Microwave Oven/Hood should be mounted against and supported by a flat vertical wall. The wall must be flat for proper installation. If the wall is not flat, use spacers to fill in the gaps. Wall construction should be a minimum of 2" x 4" wood studding and 3/8" or more thick dry wall or plaster/lath. The mounting surfaces must be capable of supporting weight of 110 pounds—the oven and contents—AND the weight of all items which would normally be stored in the top cabinet above the unit.

The unit should be attached to a minimum of one 2" x 4" wall stud.

To find the location of the studs, one of the following methods may be used:

A. Use a stud finder, a magnetic device which locates the nails in the stud.

B. Use a hammer to tap lightly across the mounting surface to find a solid sound. This will indicate stud location.

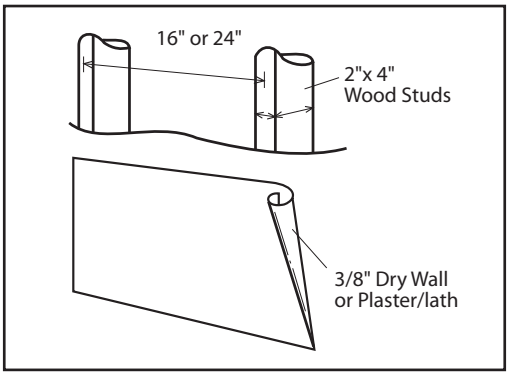

Figure 2

The center of the stud can be located by probing the wall with a small nail to find the edges of the stud and then placing a mark halfway between the edges. The center of any adjacent studs will normally be 16" or 24" to either side of this mark.

Note: In the event that the unit will be unable to be supported by any stud, it will be necessary to use special care in the placement of the toggle bolts and top cabinet screws. See Wall Template for details. The top cabinet should be tested to ensure it is securely attached to the wall. Place extra weight up to 110 pounds inside the top cabinet to test the support.

3. ELECTRICAL GROUNDING INSTRUCTIONS

This appliance must be grounded. This microwave oven is equipped with a cord having a grounding wire with a grounding plug. It must be plugged into a wall receptacle that is properly installed and grounded in accordance

with the National Electrical Code and local codes and ordinances. In the event of an electrical short circuit, grounding reduces risk of electric shock by providing an escape wire for the electric current.

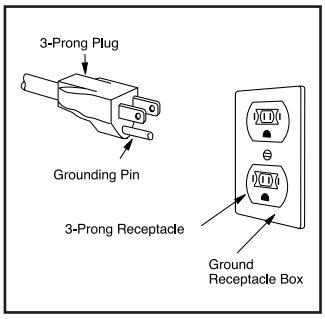

WARNING - Improper use of the grounding plug can result in a risk of electric shock.

The microwave oven is equipped with a 3-prong grounding plug. DO NOT UNDER ANY CIRCUMSTANCES CUT OR REMOVE THE GROUNDING PIN FROM THE PLUG.

The Power Supply Cord and plug must be connected to a separate 120 Volt AC, 60 Hz, 15 Amp, or more branch circuit, single grounded receptacle. The receptacle should be located inside the cabinet directly above the Microwave Oven/Hood mounting location.

Notes:

1. If you have any questions about the grounding or electrical instructions, consult a qualified electrician or serviceperson.

2. Neither Fisher & Paykel nor the dealer can accept any liability for damage to the oven or personal injury resulting from failure to observe the correct electrical connection procedures.

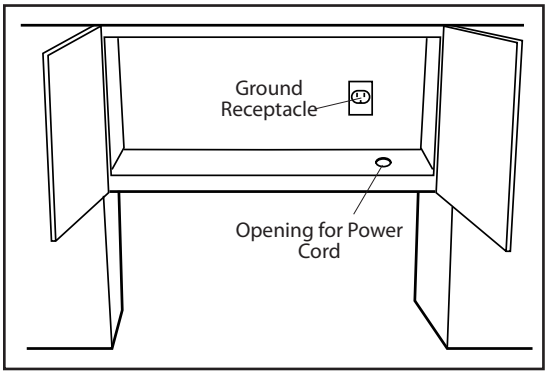

Figure 3

4. HOOD EXHAUST DUCT

When the hood is vented to the outside, a hood exhaust duct is required. All ductwork must be metal; absolutely do not use plastic duct. Check that all connections are made securely. Please read the following carefully:

EXHAUST CONNECTION: The hood exhaust has been designed to connect to a standard 3-1/4" x 10" rectangular duct. If round duct is required, a rectangular-to-round adapter must be used.

REAR EXHAUST: If a rear or horizontal exhaust is to be used, care should be taken to align the exhaust with the space between the studs, or wall should be prepared at the time it is constructed by leaving enough space between wall studs to accommodate exhaust.

MAXIMUM DUCT LENGTH: For satisfactory air movement, the total duct length of 3-1/4" x 10" rectangular or 6" diameter round duct should not exceed 140 feet.

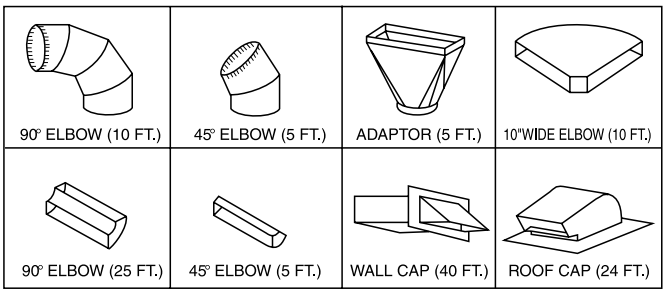

Figure 4

Elbows, adapters, wall, roof caps, etc. present additional resistance to air flow and are equivalent to a section of straight duct which is longer than their actual physical size. When calculating the total length, add the equivalent lengths of all transitions and adapters plus the length of all straight duct sections. Figure 4 shows the approximate feet of equivalent length of some typical ductwork parts. Use the values in parentheses for calculating air flow resistance equivalent, which should total less than 140 feet.

5. TOOLS RECOMMENDED FOR INSTALLATION

- Phillips Screwdriver
- Electric Drill
- Scissors
- Pencil
- Tape
- 1-1/2" Wood Bit or Metal Hole Cutter (if metal cabinet is used)
- 1/2", 5/8" and 3/32" Drill Bits
- Saw to cut exhaust opening (if needed)
- Measure
- Protective Drop Cloth for product and range—you may also use carton for protection

6. INSTALLATION HARDWARE

The INSTALLATION HARDWARE (items ①-⑦) packed with the oven should contain the following:

ITEM	NAME	QUANTITY	PART CODE
①	Wood Screw 5 x 30 mm	6	XTSS750P35000
②	Toggle Bolt #10 - 24 x 50 mm	4	LX-BZ0195WRE0
③	Top Cabinet Screw 5 x 60 mm	2	XBRS750P60000
④	Flat Washer 30 mm diameter	2	XWHS750-16300
⑤	Grommet	1	LBSHC0040MRE0
⑥	Tapping Screw 4 x 12 mm	1	XOTS740P12000
⑦	Exhaust Damper Assembly	1	FFTA-B004MRK0

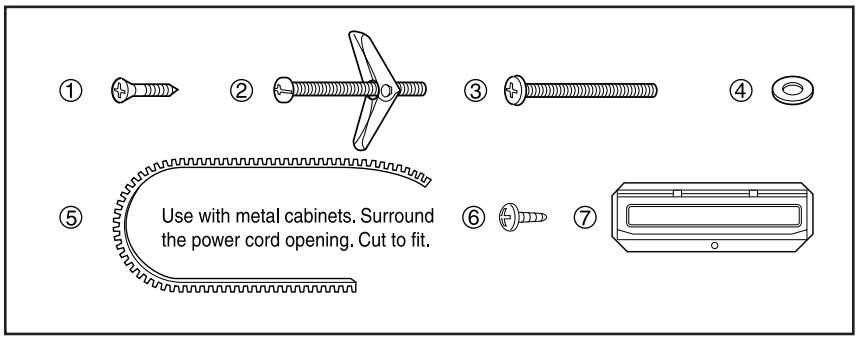

Figure 5

7. PREPARATION OF THE OVEN

Utilization of the carton may make installation easier.

1. Open the bottom of the carton, remove oven and all packing materials.
2. CHECK THE OVEN.

   Check the oven for any damage, such as misaligned or bent door, damaged door seals and sealing surfaces, broken or loose door hinges and latches and dents inside the cavity or on the door. If there is any damage, do not operate the oven and contact your dealer or DCS AUTHORIZED SERVICER.
3. Place carton upside down as shown in Figure 6-1.
4. Using cutting line around the carton, cut into two pieces (A) and (BC). See Figure 6-2.
5. Cut the remaining portion (BC) into portion (B) and portion (C) according to cutting line. See Figure 6-3.

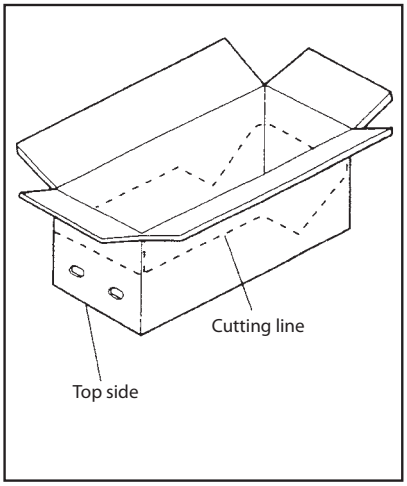

Figure 6-1

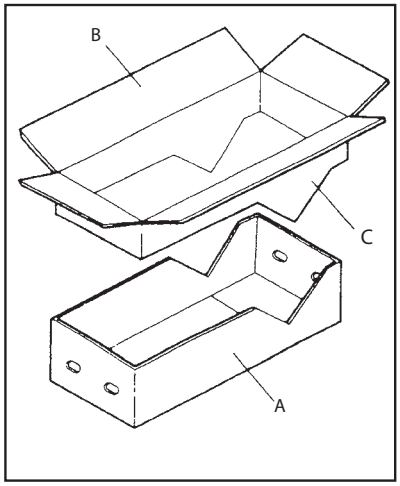

Figure 6-2

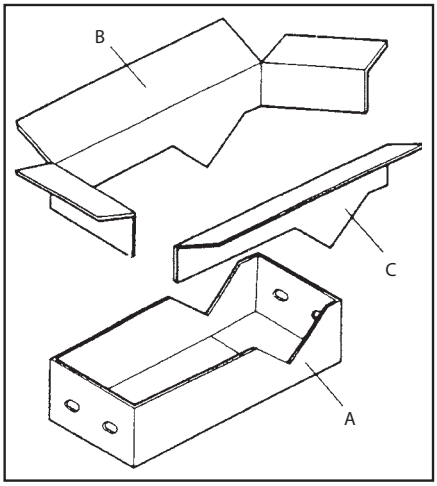

Figure 6-3

8. PREPARATION OF THE OVEN

1. Rest the microwave oven on its side as shown in Figure 7. Place portion (C) of the carton underneath to protect the outercase from being damaged.
2. Remove the two screws which secure the mounting plate to the rear side of the oven. Remove the mounting plate. The two screws can be discarded.

   Note: If the unit you purchased does not have the mounting plate attached to the rear side of the oven, please disregard this section and continue to Section 9.

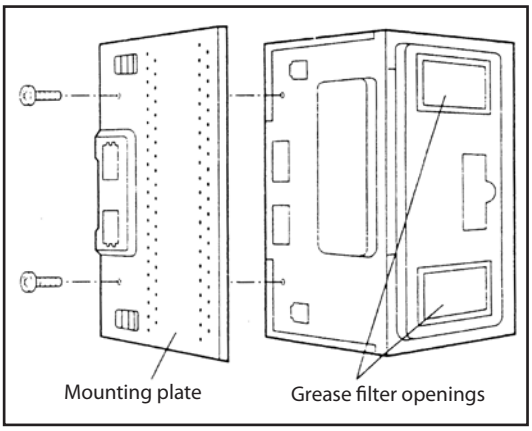

Figure 7

9. VENTILATION SYSTEM

This Microwave Oven/Hood System is designed for adaptation to three types of hood ventilation systems. Select the type required for your installation.

A. Recirculating — Non-Vented, Ductless Operation

The unit is shipped assembled for recirculating.

Notes:

1. The Exhaust Damper Assembly is not required for recirculating operation.

2. The Charcoal Filter should be replaced every 6 to 12 months, depending on use.

B. Horizontal Exhaust — Outside Ventilation

1. Remove and save the 4 screws from Fan Cover Bracket. Remove Fan Cover Bracket by sliding it in the opposite direction of the arrow on the Fan Cover Bracket, as shown in Figure 8.
2. Lift Hood Fan Unit carefully and slip wires out of cavity. See Figure 9.

   CAUTION: Do not pull or stretch hood fan wiring.

3. Rotate the Hood Fan Unit 180˚ so that the fan blade openings are facing the back of the oven. Note, you will need to lift the wire over the hood fan unit so the wire will clear. See Figure 10 (A). Replace Hood Fan Unit into the oven. Be careful not to pinch the wire and the Hood Fan Unit. See Figure 10 (B).
4. Put the wire back into the cavity.
5. Replace the fan cover bracket. Make sure the fan blades are visible through the rear openings in oven before proceeding. Attach the fan cover bracket to the unit with the 4 screws removed in step 1 above. See Figure 11. The hood fan is now rotated for horizontal exhaust operation.
6. Attach the Exhaust Damper Assembly to the back of the mounting plate by sliding it into the slits in the same direction as the arrow. See Figure 12. Using tapping screw 4 x 12 mm from the INSTALLATION HARDWARE, tighten into place.

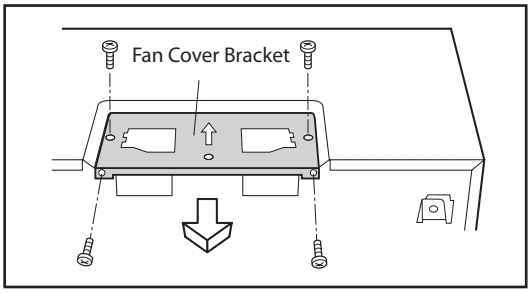

Figure 8

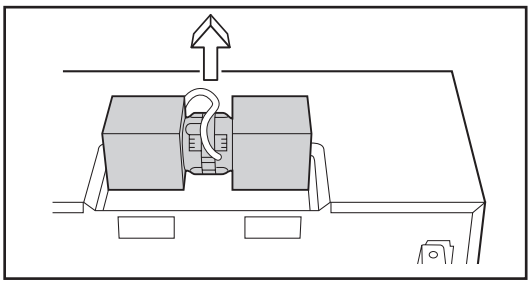

Figure 9

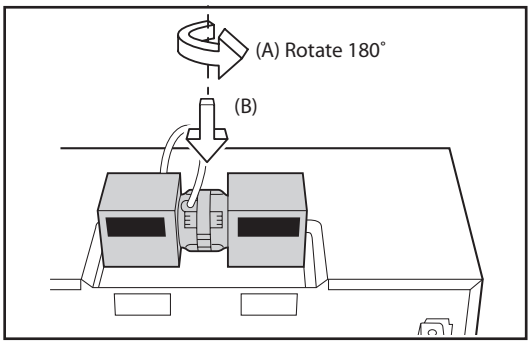

Figure 10

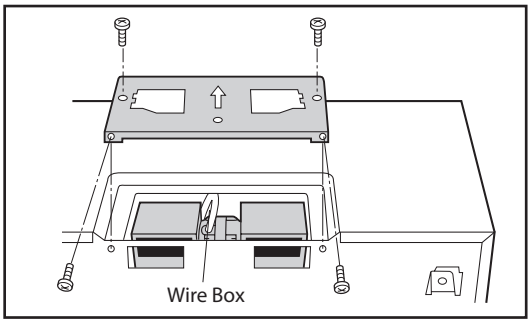

Figure 11

C. Vertical Exhaust: Outside Ventilation

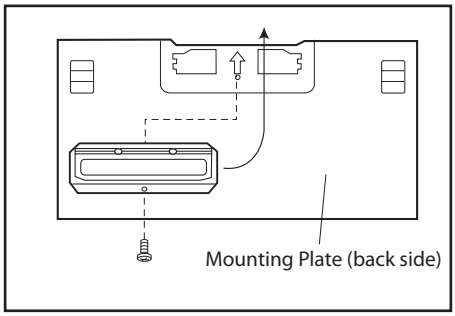

Figure 12

1. Remove and save the 4 screws from the Fan Cover Bracket. Remove Fan Cover Bracket by sliding it in the opposite direction of the arrow on the Fan Cover Bracket as shown in Figure 13.
2. Lift the Hood Fan Unit carefully and slip wires out of cavity. See Figure 14.

   CAUTION: Do not pull or stretch hood fan wiring.

3 Rotate the Hood Fan Unit 180˚ so that the fan blade openings are facing the back of the oven. Note, you will need to lift the wire over the hood fan unit so the wire will clear. See Figure 15 (A). Then rotate the Hood Fan Unit 90˚ so that the fan blade openings are facing the top of the oven. See Figure 15 (B). Replace Hood Fan Unit into the oven. Be careful not to pinch the lead wire between the inner bracket and the Hood Fan Unit. Put the lead wire into Wire Box. See Figure 15 (C).

4. Replace the Fan Cover Bracket. Make sure the fan blades are visible through the top openings in the oven before proceeding.
5. Attach the Fan Cover Bracket to unit with the 4 screws removed in step 1 above. See Figure 16. The Hood Fan Unit is now rotated for vertical exhaust operation.
6. Attach the Exhaust Damper Assembly to the fan cover on the top of the outercase cabinet by sliding it into the slits in the same direction as the arrow. Use 1 Tapping Screw 4 x12 mm from the INSTALLATION HARDWARE and tighten into place. See Figure 17.

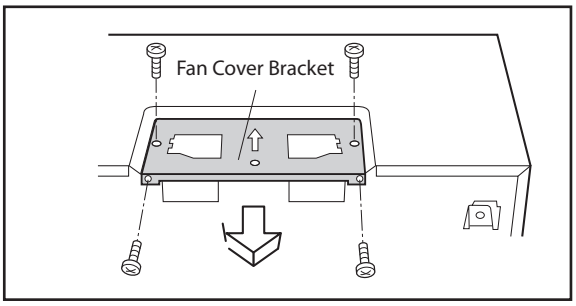

Figure 13

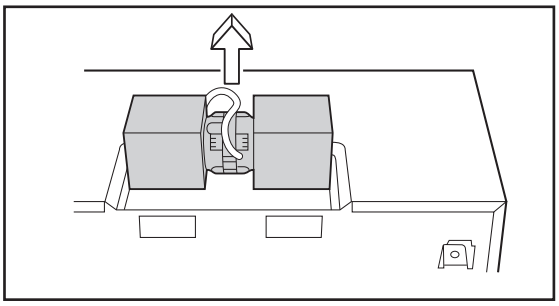

Figure 14

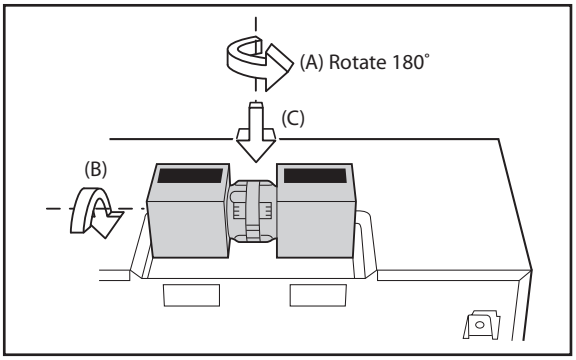

Figure 15

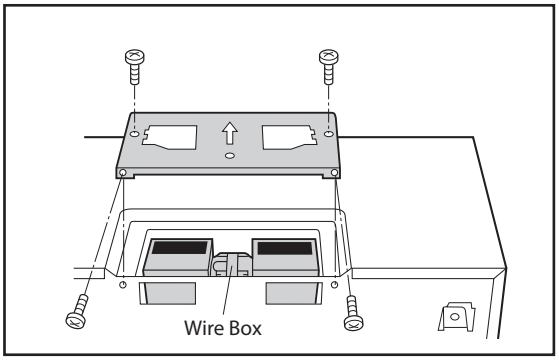

Figure 16

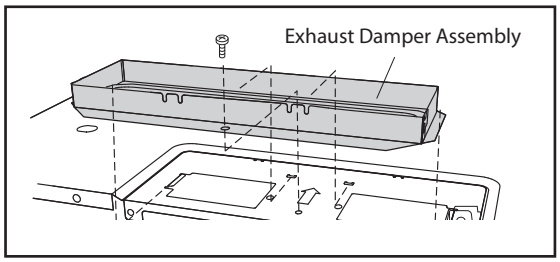

Figure 17

10. OVEN INSTALLATION

THIS MICROWAVE OVEN CANNOT BE PROPERLY INSTALLED WITHOUT REFERRING TO THE MOUNTING INSTRUCTIONS FOUND ON BOTH TEMPLATES.

READ AND FOLLOW MOUNTING INFORMATION ON BOTH TOP CABINET AND WALL TEMPLATES.

MOUNTING PLATE

1. Separate 4 Toggle Bolts ②, packed in the INSTALLATION HARDWARE, from the Toggle Nuts.
2. Use Wood Screws ① to attach Mounting Plate to the stud or studs. Use Toggle Bolts to attach Mounting Plate through the holes at A, B, C and D; UNLESS THOSE HOLES ARE LOCATED ON THE STUD. Insert one Toggle Bolt into A, B, C and D where appropriate (these correspond to the holes of the Wall Template) and put the Toggle Nuts onto the Toggle Bolts. Figure 18.

   Refer to instructions in Wall Template.
3. Position the Mounting Plate with the Toggle Bolts attached at the wall location and insert Toggle Nuts and Bolts through the holes in the wall with the Toggle Nuts closed. Figure 19. Use Wood Screws ① to attach the Mounting Plate to studs.

   Note: Before insertion, be sure you leave a space more than the thickness of the wall between the Mounting Plate and the end of each of the Toggle Nuts (in the closed position). If you do not leave enough space, the Toggle Nut will not be able to open on the other side of the wall. Also, once a Toggle Nut opens, it cannot be withdrawn from the hole; therefore make sure all of the Toggles are in the correct position before insertion.
4. Align the Mounting Plate carefully and hold in position while tightening Toggle Bolts. Pull Toggle Bolt toward you and turn clockwise to tighten. Figure 20.

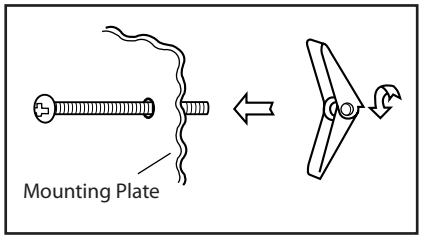

Figure 18

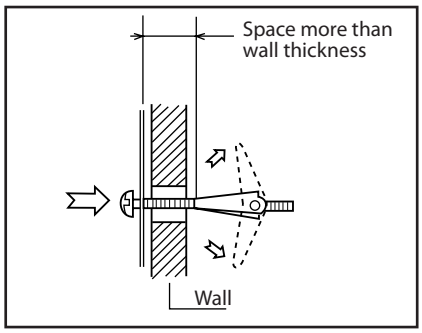

Figure 19

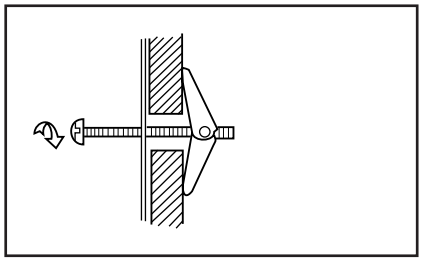

Figure 20

MOUNTING OVEN TO THE WALL

Two people are recommended to attach the Microwave Oven/ Hood to the Mounting Plate.

1. Place cut portion of carton (B) on top surface of range. Protection of the range cooking surface is recommended. A protective drop cloth may also be used to cover the top of the range.
2. Place carton portion (C) on portion (A); then place oven as shown in Figure 21.
3. Place the oven and the carton portions together on the top of the range covered with (B). Slide carton portion (A) toward backsplash until stops. Align the lower back edge of the oven with the mounting plate.

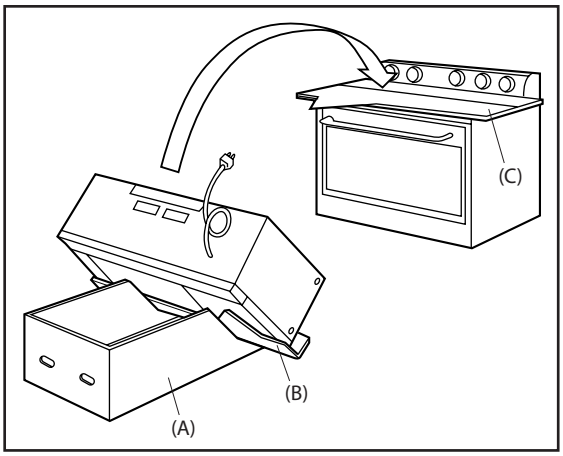

Figure 21

4. Thread the power supply cord through the hole made in the bottom of the top cabinet.
5. Hang the oven on the lower edge of the mounting plate. Rotate the unit upward. See Figure 22. Take care that the power cord is able to clear the edge of the hole as the oven is rotated upward. (In the case of a non-recessed bottom in the top cabinet, the hole for the cord may need to be enlarged.) Remove the carton portions.
6. Tighten the two unit mounting screws located in the grease filter openings. See Figure 23.
7. Install grease filters by fitting into the opening. Push back and up into place. See Figure 24.
8. Use the two Top Cabinet Screws (D) and two Flat Washers (E), supplied in the INSTALLATION HARDWARE, to attach the unit to the top cabinet. See Figure 25.
9. Make a bundle of the power supply cord and place it inside the cabinet.

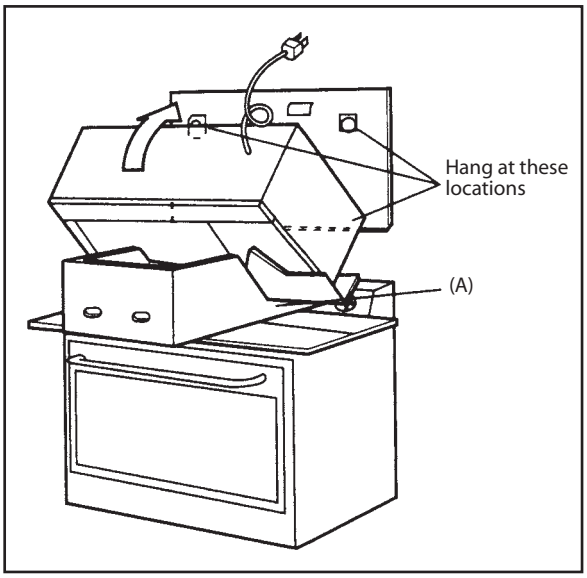

Figure 22

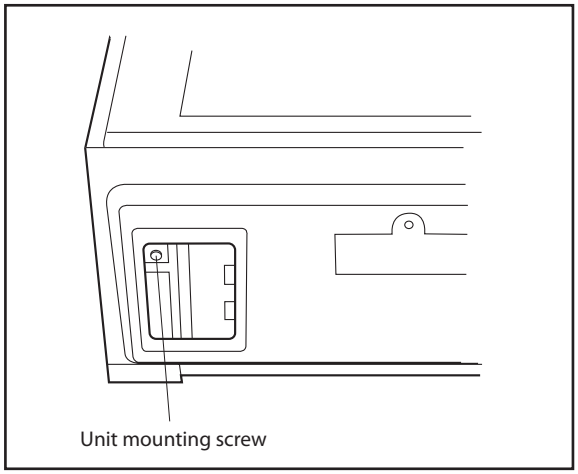

Figure 23

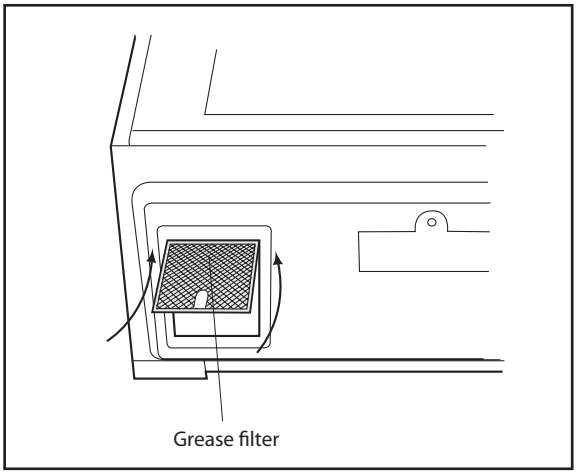

Figure 24

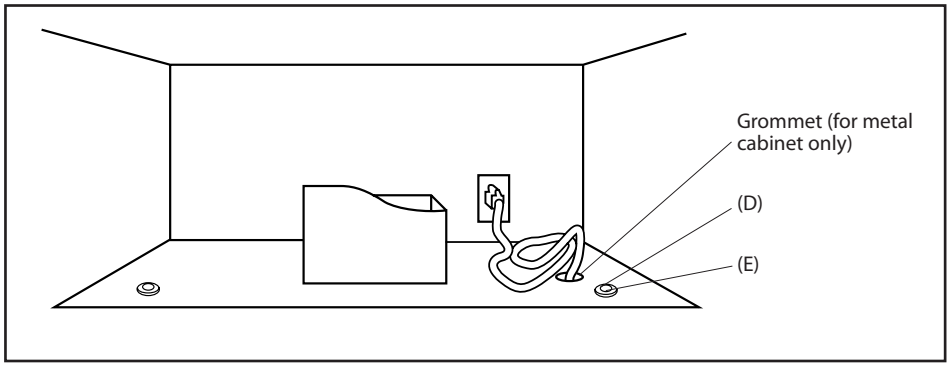

Figure 25

MOUNTING DEFLECTOR

Secure the deflector with 3 Tapping screws 4 x 12mm, packed in the Installation Hardware.

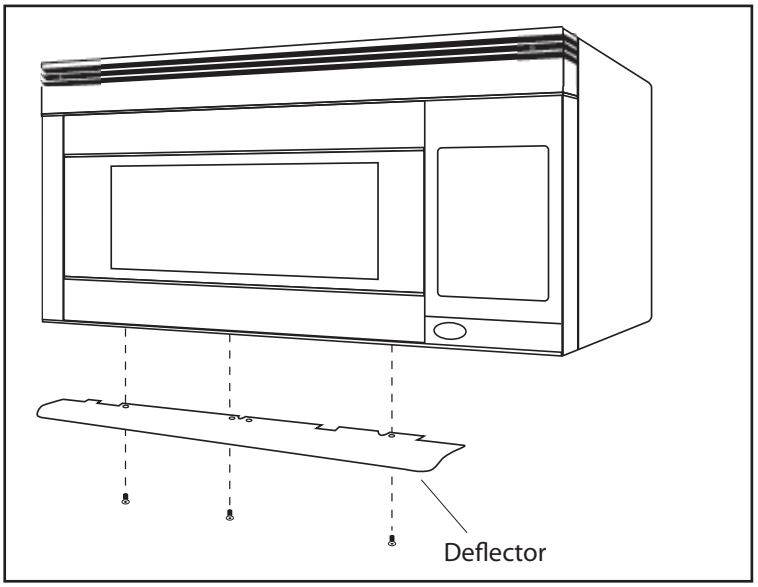

CHECKLIST FOR INSTALLATION

1. Make sure the unit has been installed according to all of the Installation Instructions and the Wall and Top Cabinet Templates.
2. Plug in the power cord.
3. Keep the Use and care guide.

Fisher&Paykel

DCS by Fisher&Paykel

Quality provided by Fisher & Paykel Appliances Inc.

Fisher & Paykel Appliances, Inc.
5900 Skylab Road, Huntington Beach, CA 92647
Customer Care: 888.936.7872 • Fax: 714.372.7003
www.fisherpaykel.com
www.dcsappliances.com

P/N 243710 RA
TINSEB515MRR0