This Owner's Manual is provided and hosted by Appliance Factory Parts.

Appliance Factory Parts
Experts in BBQ, Humidifier, & Appliance Parts
1-800-955-7075

STERLING FORGE 720-0322 Owner's Manual

Shop genuine replacement parts for STERLING FORGE 720-0322

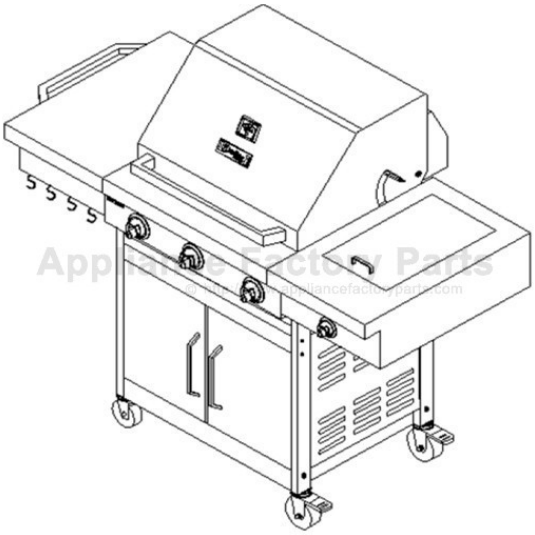

Find Your STERLING FORGE Grill Parts - Select From 10 Models

-------- Manual continues below --------

Essential Element for Outdoor Entertainment

Stainless Steel Gas Grill
USE AND CARE GUIDE

MODEL NO.: 720-0322
Sterling Forge: SKU# SF2456

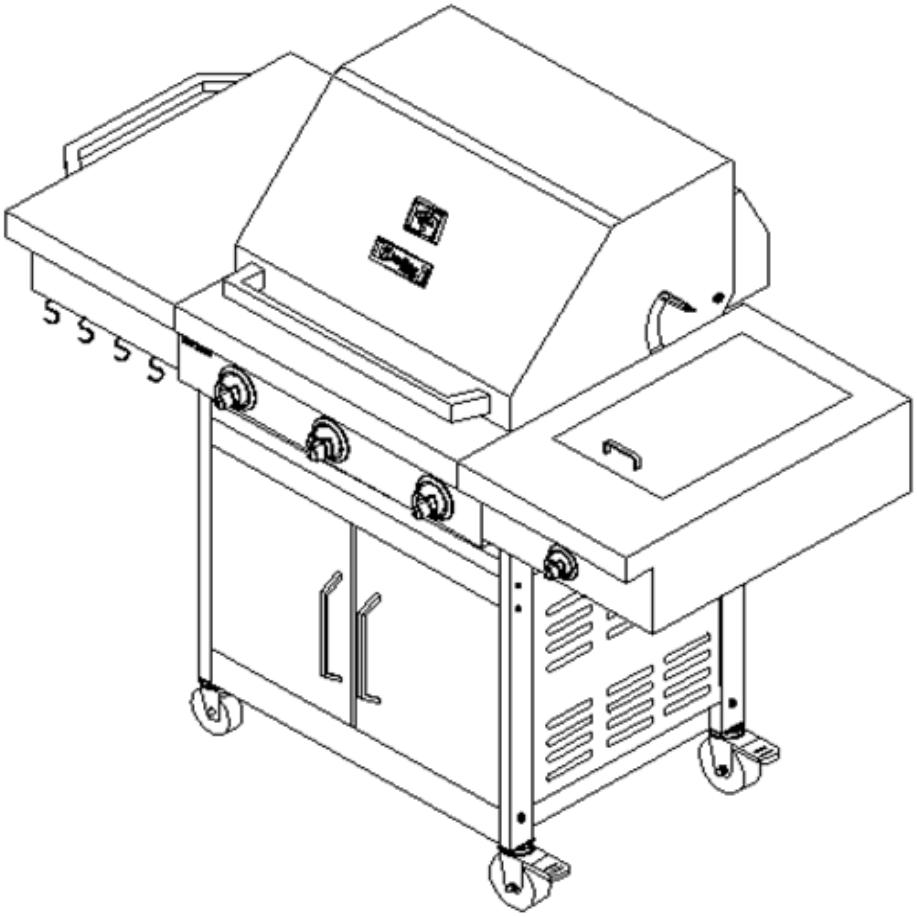

CUSTOMER SERVICE: www.sterlingforgegrills.com **FOR OUTDOOR USE ONLY**

TABLE OF CONTENTS

SECTION ONE:
Table of Contents & Importance----------1
Precautions----------2-5

SECTION TWO:
Assembly Instructions----------6-13
Gas holder & propane tank assembly ----------14
To match light the grill----------15

SECTION THREE:
Gas Hook up----------16
Leak Testing----------17
Installer Final Check----------18

SECTION FOUR:
Operating Instruction----------19
Lighting Instructions----------20
Lighting Illustrations----------21

SECTION FIVE:
Care & Maintenance----------22

SECTION SIX:
Exploded View----------23
Parts List----------24

SECTION SEVEN:
Trouble Shooting----------25

SECTION EIGHT:
Grilling Hints----------26
Grill Cooking Chart----------26-28

SECTION NINE:
Grill Recipe Suggestions ----------29-30

SECTION TEN:
Limited Warranty----------31

IMPORTANCE

* * * **WARNING** * * *

Danger

FOR YOUR SAFETY

I f you smell gas:
1. Shut off gas to the appliance.
2. Extinguish any open flame.
3. Open lid
4. If odor continues, keep away from the appliance and immediately call you gas supplier or your fire department.

Warning

FOR YOUR SAFETY

1. Do not store or use gasoline or other flammable vapors and liquids in the vicinity of this or any other appliance.
2. An LP cylinder not connected for use shall not be stored in the vicinity of this or any other appliance.

WARNING

Combustion byproducts produced when using this product contain chemicals known to the State of California to cause cancer, birth defects, or other reproductive harm.

WARNING

Failure to comply with these instructions could result in a fire or explosion that could cause serious bodily injury, death, or property damage.

WARNING

Your grill will get very hot. Never lean over the cooking area while using your grill. Do not touch cooking surfaces, grill housing, Lid or any other grill parts while the grill is in operation, or until the gas grill has cooked down after use.
Failure to comply with these instructions may result in serious bodily injury.

PRECAUTIONS

WARNING
Do not try lighting this appliance without reading the "LIGHTING INSTRUCTIONS" section of this manual.

Grill Installation Codes
The installation must conform with local codes or,in the absence of local codes ,with either the national fuel gas code ,ANSIZ 223.1/NFPA 54,Natural gas and Propane installation code, CSA B149.1,or Propane Storage and Handling Code,B149.2, or the Standard for Recreational Vehicles, ANSI A 119.2/NFPA 1192,and CSA Z240 RV series Recreational Vehicle Code,as applicable.

Correct LP Gas Tank Use
LP gas grill models are designed for use with a standard 20 lb. Liquid Propane Gas tank, not included with grill. **Never** connect your gas grill to an LP gas tank that exceeds this capacity.

If an external electrical source is utilized,
The outdoor cooking gas appliance, when installed, must be electrically grounded in accordance with local codes or, in the absence of local codes, with the National Electrical Code, ANSI/NFPA 70, or the Canadian Electrical Code, CSA C22.1.

WARNING
Keep any electrical supply cord and the fuel supply hose away from any heated surfaces.

NOTE: The normal flow of gas through the regulator and hose assembly can create a humming noise. A low volume of noise is perfectly normal and will not interfere with operation of the grill. If humming noise is loud and excessive you may need to purge air from the gas line or reset the regulator excess gas flow device. This purging procedure should be done every time a new LP gas tank is connected to your grill.

CAUTION: Beware of Flash-back

CAUTION: Spiders and small insects occasionally spin webs or make nests in the grill burner tubes during transit and warehousing. These webs can lead to gas flow obstruction, which could result in a fire in and around burner tubes. This type of fire is known as "FLASH-BACK" and can cause serious damage to your grill and create an unsafe operating condition for the user.

Although an obstructed burner tube is not the only cause of "FLASH-BACK", it is the most common cause.

To reduce the chance of "FLASH-BACK", you must clean the burner tubes before assembling your grill, and at least once a month in late summer or early fall when spiders are most active. Also perform this burner tube cleaning procedure if your grill has not been used for an extended period of time. A clogged tube can be lead to a fire beneath the grill.

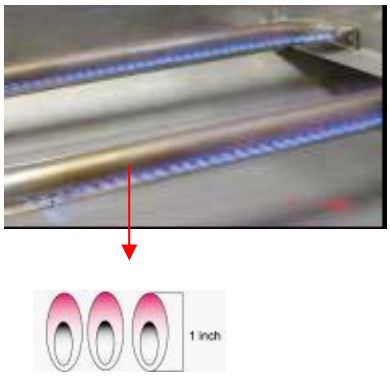

Visually check the burner flames prior to each use,The flames should look like this picture,if they do not ,refer to the burner main tenance part of this manual.

PRECAUTIONS

LP-Gas Supply System

- A tank of approximately 12 inches in diameter by 18-1/2 inches high is the maximum size LP gas tank to use. **You must use an OPD gas tank, which offers an Overfill Prevention Device.**
- This safety feature prevents the tank from being overfilled, which can cause malfunction of the LP gas tank, regulator and/or grill.

- The LP gas tank must be constructed and marked in accordance with specifications of the U.S. Dept. of Transportation (DOT). In Canada, the LP gas tank must meet the National Standard of Canada ,CAN/CSA –B339 , Cylinders, Spheres and Tubes for Transportation of Dangerous Goods and Commission .

- The LP gas tank must have a shutoff valve, terminating in an LP gas supply tank valve outlet, that is compatible with a Type 1 tank connection device. The LP gas tank must also have a safety relief device that has a direct connection with the vapor space of the tank.
- The tank supply system must be arranged for vapor withdraws.
- The LP gas tank used must have a collar to protect the tank valve
- **Never** connect an unregulated LP gas tank to your gas grill. The gas regulator assembly supplied with your gas grill is adjusted to have an outlet pressure of 11" water column (W.C.) for connection to an LP gas tank.
- Have your LP gas tank filled by a reputable propane gas dealer and visually inspected and re-qualified at each filling.
- Do not store a spare LP gas cylinder under or near this appliance.
- Never fill the cylinder beyond 80 percent full .
- If the information in a) and b) is not followed exactly a fire causing death or serious injury may occur.
- Always keep LP gas tanks in an upright position.
- Do not store (or) or use gasoline or other flammable vapors and liquids in the vicinity of this gas grill.
- Do not subject the LP gas tank to excessive heat.
- Never store an LP gas tank indoors. If you store your gas grill in the garage or other indoor location, **always** disconnect the LP gas tank first and store it safely outside.
- Place dust cap on cylinder valve outlet whenever the cylinder is not in use. Only install the type of dust cap on the cylinder valve outlet that is provided with the cylinder valve. Other types of caps or plugs may result in leakage of propane.
- LP gas tanks must be stored outdoors in a well-ventilated area and out of reach of children. Disconnected LP gas tanks must not be stored in a building, garage or any other enclosed area.
- When your gas grill is not in use the gas must be turned off at the LP gas tank.

PROPER PLACEMENT AND CLEARANCE OF GRILL

- **Never** use your gas grill in a garage, porch, shed, breezeway or any other enclosed area. Your gas grill is to be used **outdoors only.** Minimum clearance from sides and back of unit to combustible construction, 24 inches (61cm) from sides and 24 inches (61cm) from back.
- **DO NOT** use this appliance under overhead combustible surfaces. This outdoor cooking gas appliance is not intended to be installed in or on recreational vehicles and/or boats**.**
- Do not obstruct the flow of ventilation air around the gas grill housing. Only use the regulator and the hose assembly supplied with your gas grill. Replacement regulators and hose assemblies must be those specified in this manual.
- The regulator and hose assembly must be inspected before each use of the grill. If there is excessive abrasion or wear or if the hose is cut, it must be replaced prior to the grill being put into operation. Keep the fuel supply hose away from any heated surfaces and dripping grease.
- Avoid unnecessary twisting of hose. Visually inspect the hose prior to each use for cuts, cracks, excessive wear or other damage. If the hose appears damaged do not use the gas grill.
- **Never** light your gas grill with the lid closed or before checking to ensure the burner tubes are fully seated over the gas valve orifices.
- **Never** allow children to operate your grill.

- *DO NOT USE BRIQUETTES OF ANY KIND IN THE GRILL.*

- The Courtyard Grill is designed for optimum performance without the use of briquettes. Do not place briquettes on the radiant as this will block off the area for the grill burners to vent. Adding briquettes can damage ignition components and knobs, and void the warranty.

- Keep the back of the cart free and clear from debris. Keep any electrical supply cord, or the rotisserie motor cord away from the heated areas of the grill.

- Never use the grill in extremely windy conditions. If located in a consistently windy area (oceanfront, mountaintop, etc.) a windbreak will be required (see below). Always adhere to the specified clearance.

- NEVER USE A DENTED OR RUSTY PROPANE TANK

PRECAUTIONS

WARNING

Your grill will get very hot. Never lean over the cooking area while using your grill. Do not touch cooking surfaces, grill housing, Lide or any other grill parts while the grill is in operation, or unit the gas grill has cooked down after use.

ROTISSERIE DRIVE MOTOR

USE ONLY FOR OUTDOORS, DO NOT EXPOSE TO RAIN.

CAUTION: TO ENSURE CONTINUED PROTECTION AGAINST RISK OF ELECTRIC SHOCK, CONNECT TO PROPERLY GROUNDED OUTLETS ONLY, TO REDUCE THE RISK OF ELECTRIC SHOCK, KEEP EXTENSION CORD CONNECTION DRY AND OFF THE GROUND.

INSPECT WARNING:

Spiders and insects can nest in the burners of this and any other grill, and cause the gas to flow improperly. This is a very dangerous condition, which can cause a fire to occur behind and beneath the valve panel, thereby damaging the grill and making it unsafe to operate. Inspect the grill twice a year.

WARNING

ELECTRICAL GROUNDING INSTRUCTIONS: This appliance (rotisserie motor) is equipped with a plug and should be plugged directly into a properly grounded receptacle. DO NOT cut or remove the grounding prong from this plug.
Keep the rotisserie motor electric cord away from the heated surfaces of the grill. When not in use remove and store the motor in a dry location.

WARNING

Keep a spray bottle of soapy water near the gas supply valve and check the connections before each use.

DO NOT USE ALUMINUM FOIL TO LINE THE GRILL RACKS OR GRILL BOTTOM.

This can severely upset combustion airflow or trap excessive heat in the control area.

DO NOT LEAVE THE GRILL UNATTENDED WHILE COOKING.

SAFETY PRACTICES TO AVOID PERSONAL INJURY

When properly cared for, your grill will give safe, reliable service for many years. However, extreme care must be used since the grill produces intense heat and that can increase accident potential. When using this appliance basic safety practices must be followed, including the following:

Read this Care and Use Manual carefully and completely before using your grill to reduce the risk of fire, burn hazard or other injury.
Do not repair or replace any part of the grill unless specifically recommended in this manual. All other service should be referred to a qualified technician.

CHILDREN SHOULD NOT BE LEFT ALONE OR UNATTENDED IN AN AREA WHERE THE GRILL IS BEING USED. NEVER ALLOW THEM TO SIT, STAND OR PLAY ON OR AROUND THE GRILL AT ANY TIME.

Never let clothing, potholders or other flammable materials come in contact with or too close to any grate, burner or hot surface until it has cooled. Fabric may ignite and result in personal injury.

For personal safety, wear proper apparel. Loose fitting garments or sleeves should never be worn while using this appliance. Some synthetic fabrics are highly flammable and should not be worn while cooking. Only certain types of glass, heatproof glass ceramic, earthenware, or other glazed utensils are suitable for grill use. Theses types of materials may break with sudden temperature changes. Use only on low or medium heat settings according to the manufacturer's directions.

Do not heat unopened food containers as a build-up of pressure may cause the container to burst.

Use a covered hand when opening the grill lid. Never lean over an open grill.

Warning

A statement that this outdoor cooking gas appliance is not intended to be installed in or on boats. For other than RV grills, a statement that this appliance is not intended to be installed in or on recreational vehicles.

PRECAUTIONS

WHEN LIGHTING A BURNER, ALWAYS PAY CLOSE ATTENTION TO WHAT YOU ARE DOING. BE CERTAIN YOU ARE TURNING THE IGNITER LABELED FOR THE BURNER YOU INTEND ON USING.

When using the grill, do not touch the grill rack, burner grate or immediate surroundings as these areas become extremely hot and could cause burns. Use only dry potholders. Moist or damp potholders on hot surfaces may cause burns from steam. Do not use a towel or bulky cloth in place or potholders. Do not let potholders touch hot portions of the grill rack.

Grease is flammable. Let hot grease cool before attempting to handle it. Avoid letting excess grease deposits collect in the grease tray at the bottom of the grill's firebox. Clean often.

DO NOT USE ALUMINUM FOIL TO LINE THE GRILL RACKS OR GRILL BOTTOM. This can severely upset combustion airflow or trap excessive heat in the control area.

For proper lighting and performance of the burners keep the burner ports clean. It is necessary to clean them periodically for optimum performance. The burners will only operate in one position and must be mounted correctly for safe operation.

Clean the grill with caution. Avoid steam burns; do not use a wet sponge or cloth to clean the grill while it is hot. Some cleaners produce noxious fumes or can ignite if applied to a hot surface.

Be sure all grill controls are turned off and the grill is cool before using any type of aerosol cleaner on or around the grill. The chemical that produces the spraying action could, in the presence of heat, ignite, or cause metal parts to corrode.

Do not use the grill for cooking excessively fatty meats or products, which promote flare-ups. Do not operate the grill under unprotected combustible construction. Use only in well ventilated areas. Do not use in buildings, garages, sheds, breezeways or other such enclosed areas. *THIS UNIT IS FOR OUTDOOR USE ONLY.*

Keep the area surrounding the grill free from combustible materials, trash, or combustible fluids and vapors such as gasoline or charcoal lighter fluid. Do not obstruct the flow of combustion and ventilation air. If the unit is stored indoors ensure that it is cool. If propane is used, the cylinder must be unhooked and the propane cylinder stored outside in a well-ventilated area, out of the reach of children.

ASSEMBLY INSTRUCTIONS

PLEASE READ THE INSTRUCTIONS CAREFULLY AND FOLLOW STEP BY STEP.

TOOLS REQUIRED: Philips head screwdrivers (not provided), monkey wrench (not provided).

Item	Description(SCALE 1:1)	Specification	Quantity
1	crossed round head screw 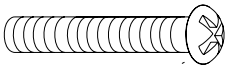	1/4"¡ Á0mm	8pcs
2	crossed round head screw 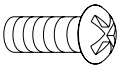	1/4"¡ Á0mm	16pcs
3	crossed round head screw	5/32"¡ Á0mm	12pcs
4	crossed round head screw	M4¡ Á6mm	2pcs
5	washer	1/4"	24pcs
6	washer	5/32"	12pcs
7	flat washer	1/4"	8pcs

Step1: Remove side panels and casters from the carton. Secure two casters to the left side panel, and secure two casters with brake to the right side panel together.

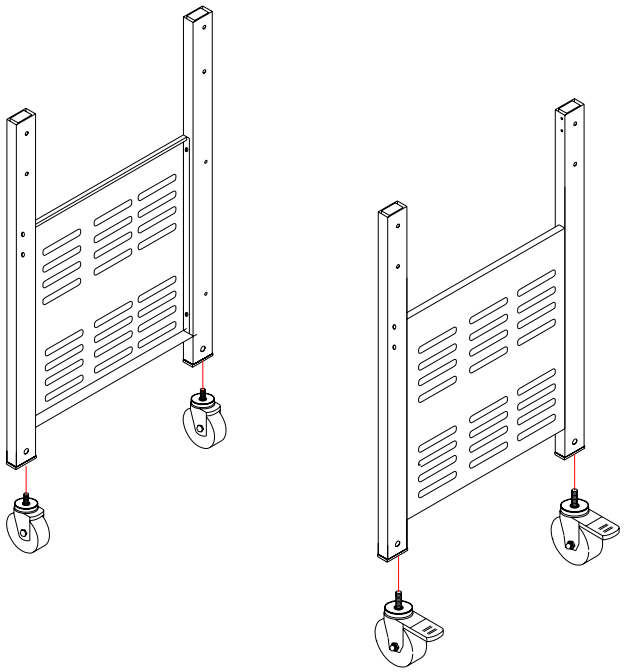

ASSEMBLY INSTRUCTIONS

Step 2: Assemble bottom panel to side panels with four (4) pcs 1/4”*40mm screws as shown in figure below.

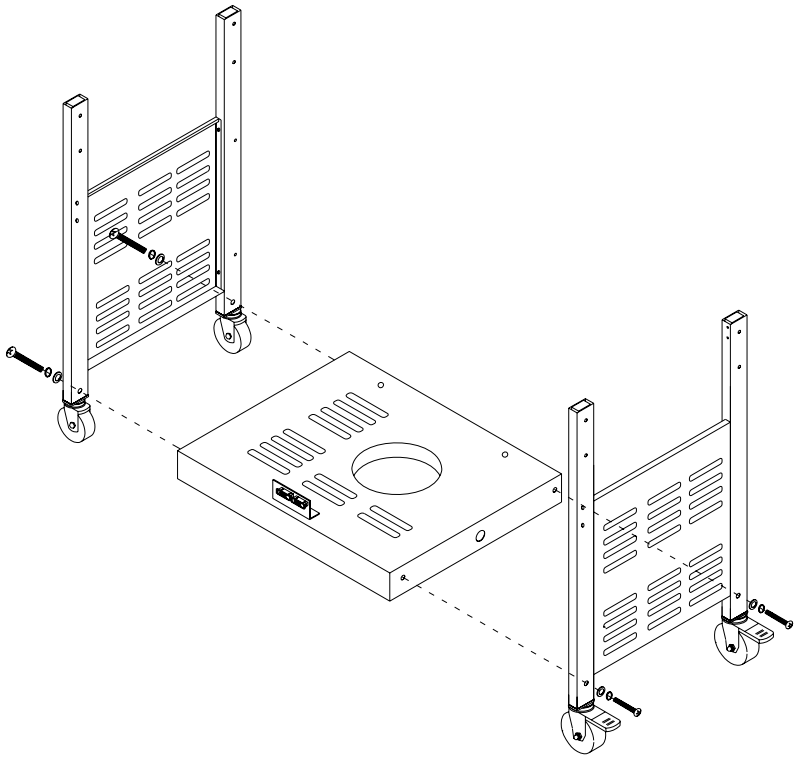

Step 3: Assemble back panel to side panels with six (6) pcs 5/32”*10mm screws as shown in figure below.

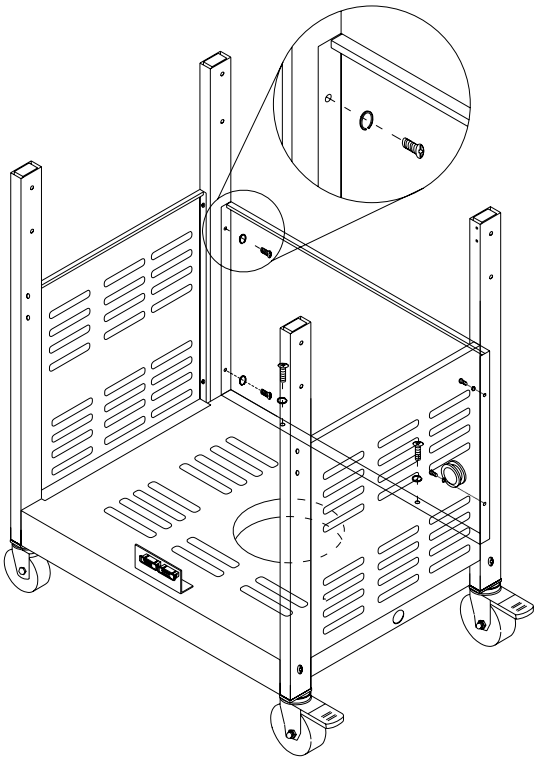

ASSEMBLY INSTRUCTIONS

Step 4: Assemble the doors and door frame to side panels with four (4) pcs 1/4”*40mm as shown in figure below.

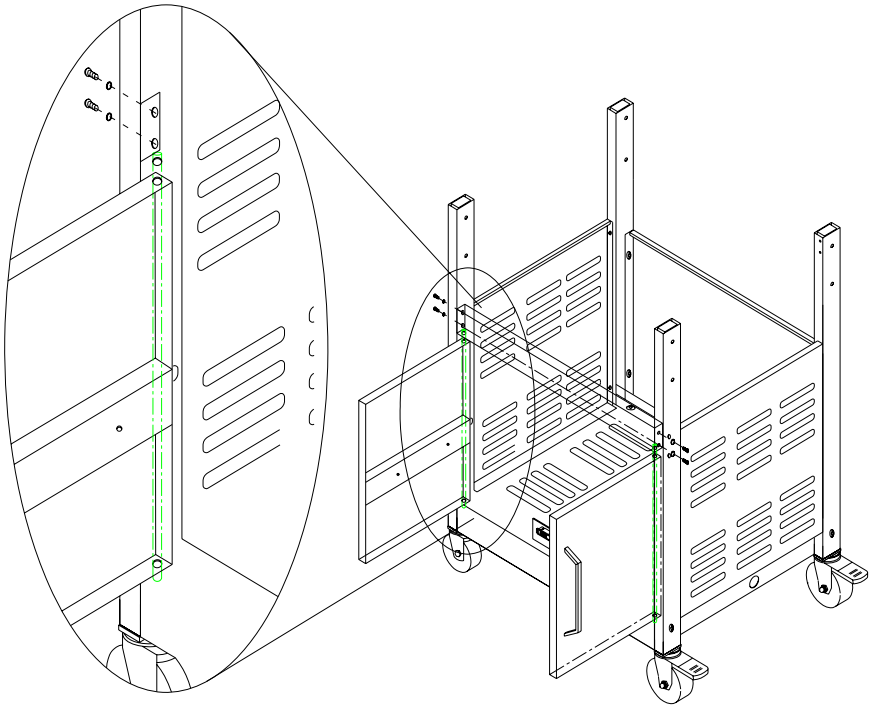

Step 5: Assemble the spice rack on the left door with two (2) pcs 5/32”*10mm screws as shown in figure below.

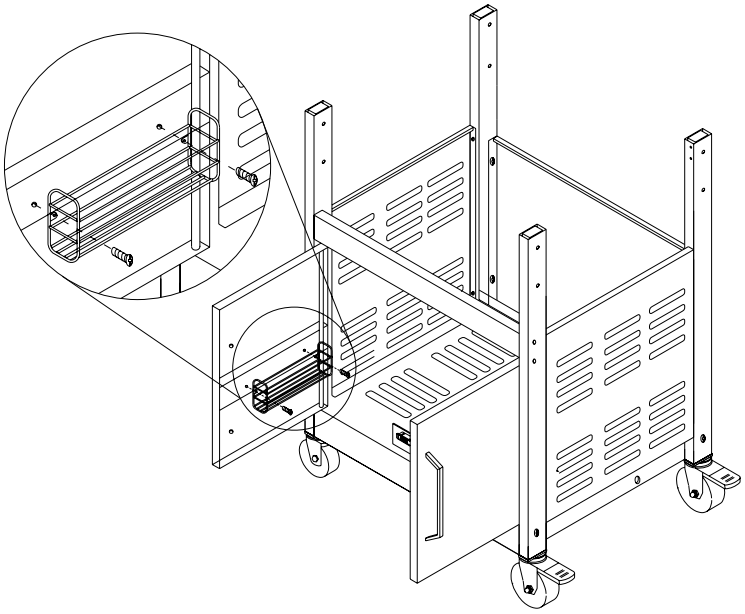

Step 6: Remove the head unit of grill. Insert the upper portion of the grill onto the cart from the top.

Caution!!! The firebox is heavy, and we recommend two or more people to lift up firebox.

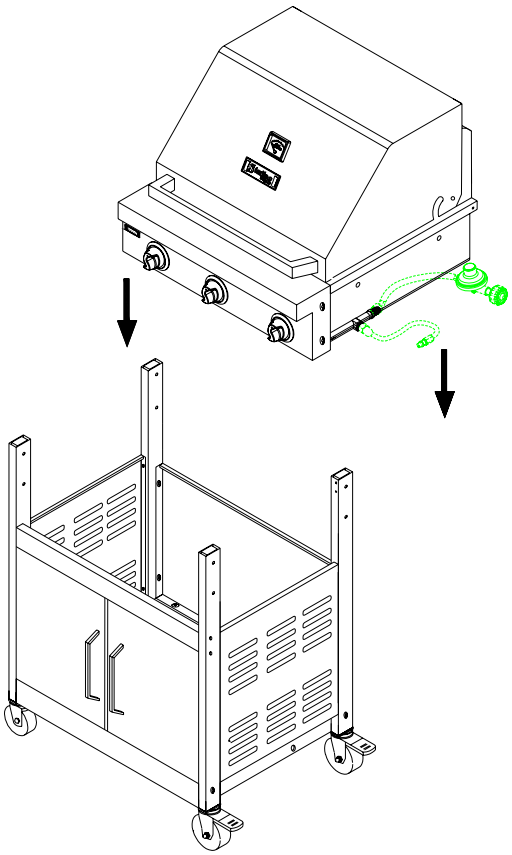

Step 7: Keep the main lid opening, take out cooking grid & flame tamer, then align the firebox and the cart with four (4) pcs 1/4”*10mm screws as shown in figure below.

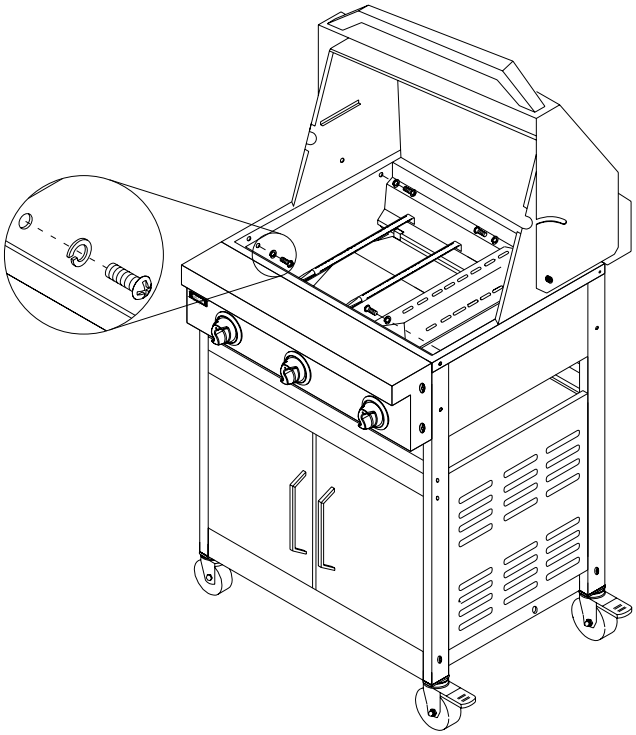

Step 8: Assemble the side shelf and the side burner with eight (8) pcs 1/4”*10mm screws as shown in figure below.

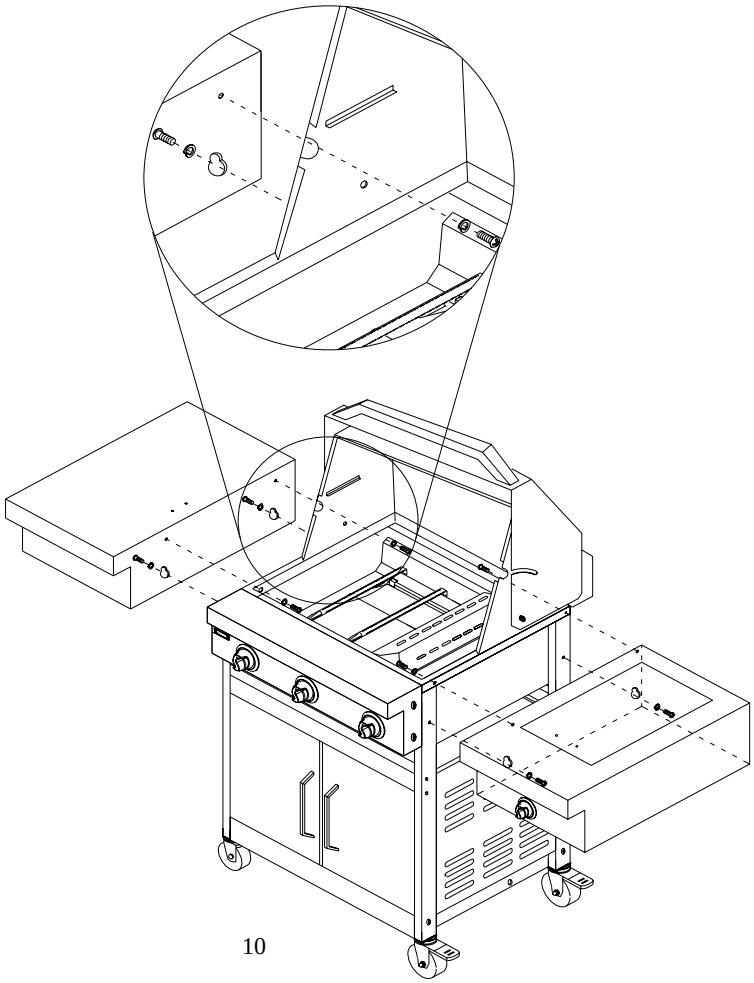

Step 9: Connect the quick connector as shown in figure below.

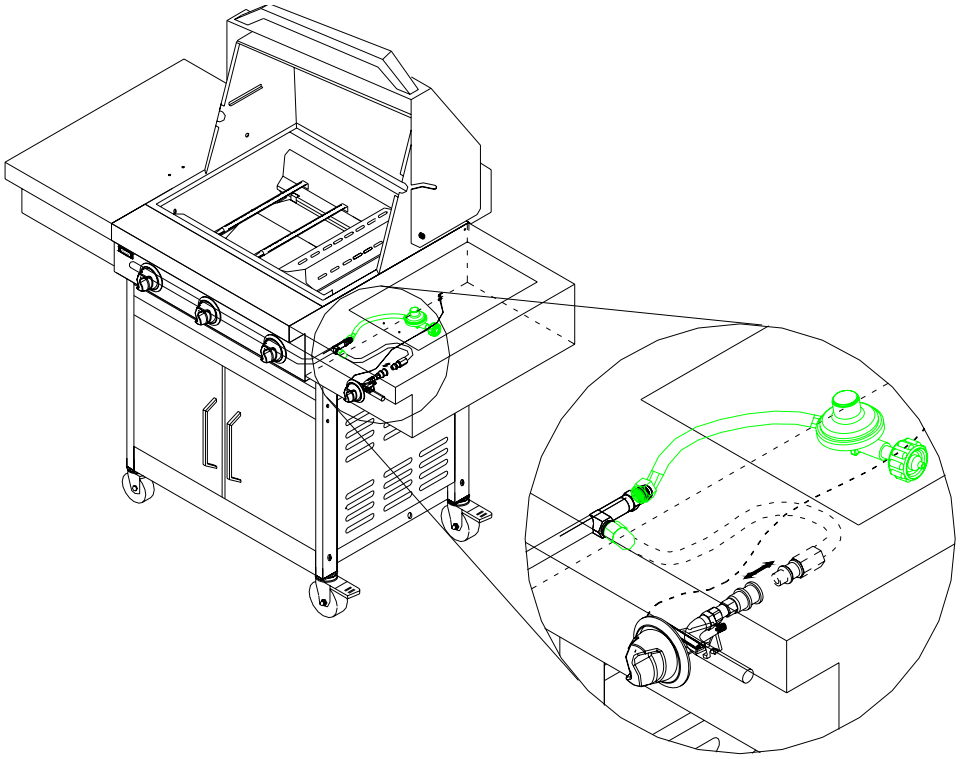

Step 10: Assemble the side burner lid handle to side burner lid with two (2) pcs M4*6mm screws as shown in figure below.

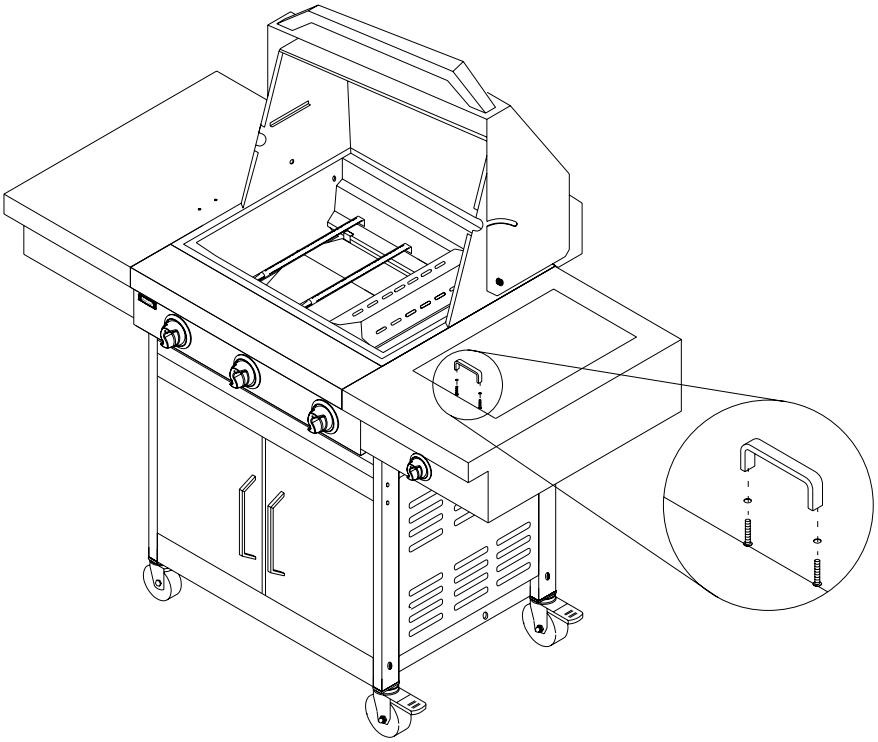

Step11: Assemble the side shelf handle to side shelf with four (4) pcs 1/4”*10mm screws as shown in figure below.

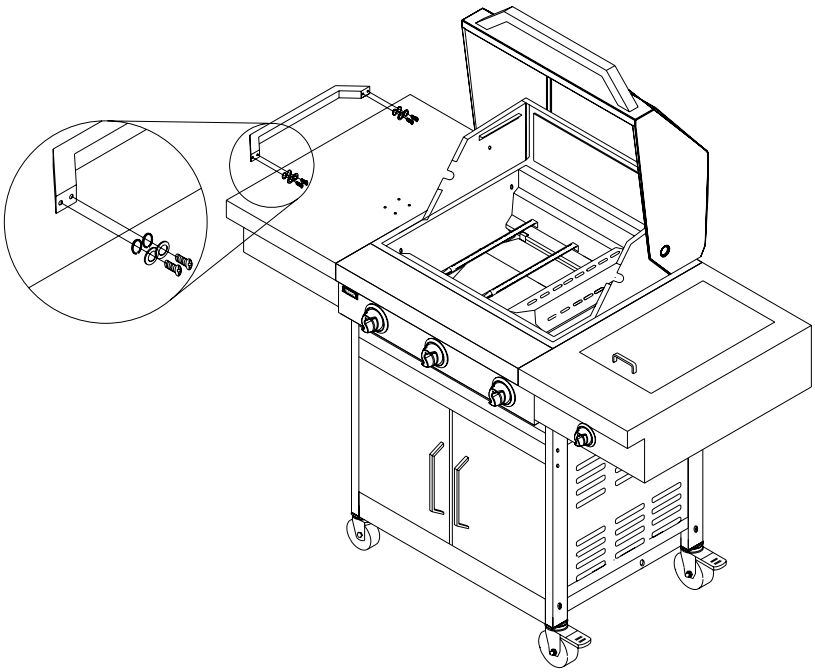

Step12: Hang up utensil hooks on the left side shelf as shown in figure below.

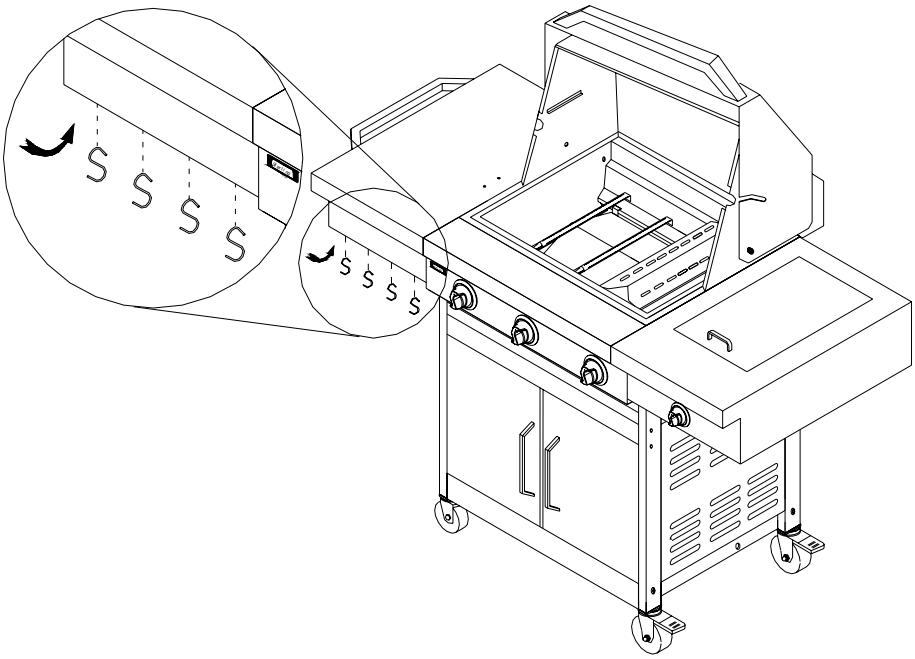

Step 13: The screws used to attach the rotisserie motor bracket are already screwed into the rotisserie motor bracket (see figure below). Remove the screws from rotisserie motor bracket, align the rotisserie motor bracket with the holes in the grill, and tighten up the screws.

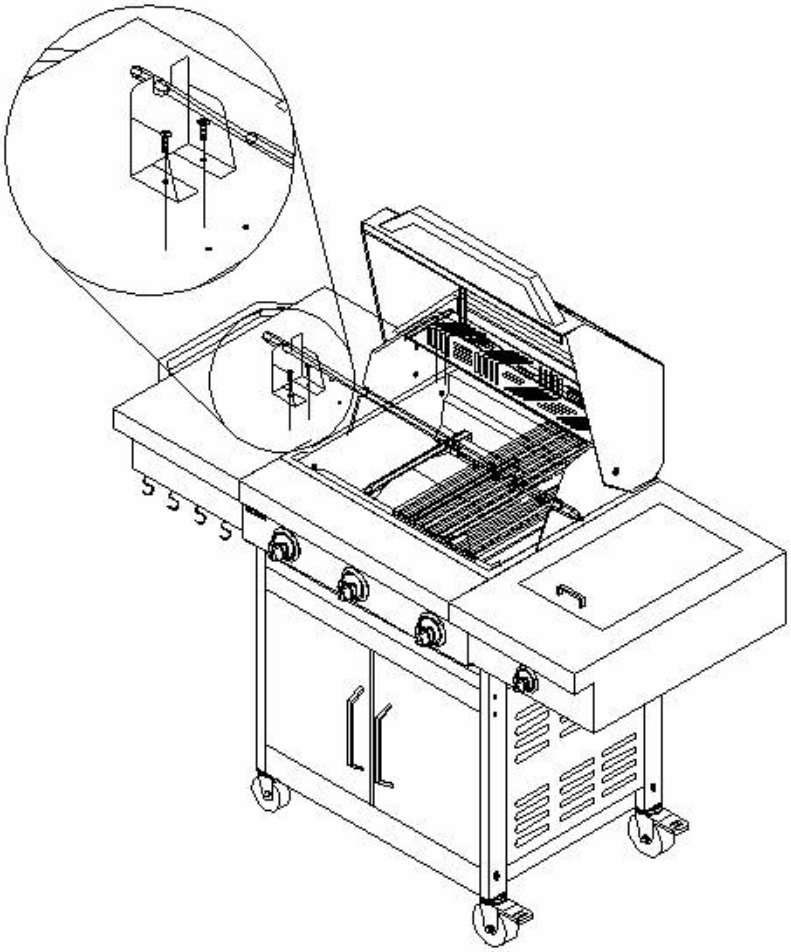

GAS HOLDER & PROPANE TANK ASSEMBLY

- ✧ Secure the gas tank onto the hole of bottom panel with the retention screw.
- ✧ With hand attach propane gas tank to regulator inlet fitting by turning the regulator clockwise until tight as shown in figure below.
- ✧ LP gas cylinder must be fitted with a listed overfill prevention device (OPD)

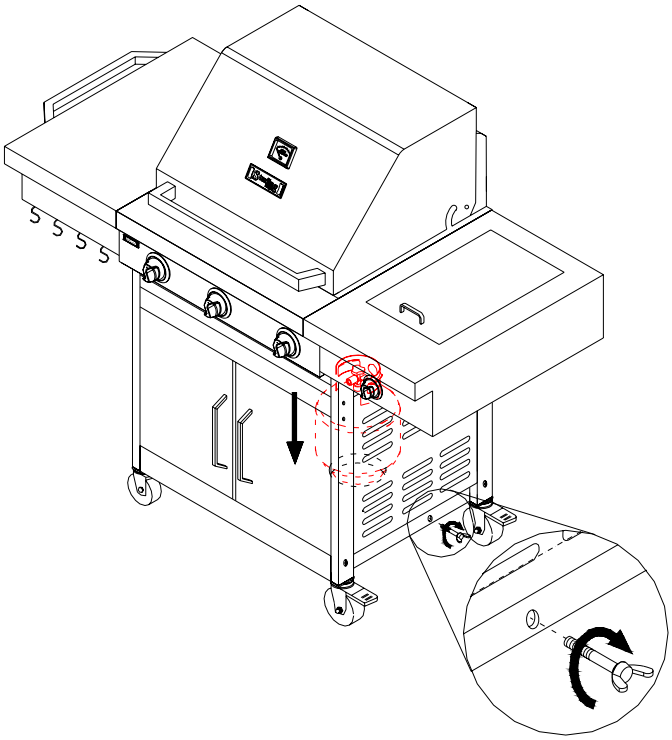

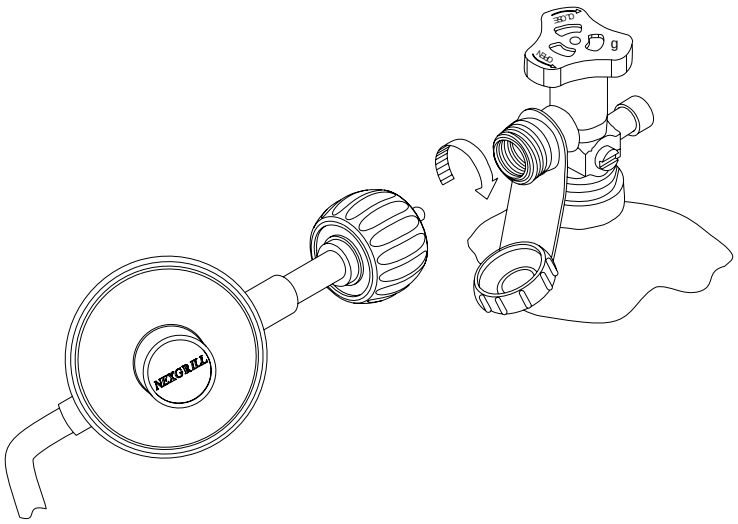

CAUTION! ASSEMBLY TO PROPANE TANK.DO NOT USE TOOLS TO ATTACH REGULATOR / HOSE ASSEMBLY TO PROPANE TANK.

TO MATCH LIGHT THE GRILL

1. If the burner will not light after several attempts then the burner can be match lit.

2. If you've just attempted to light the burner with the ignition, allow 5 minutes for any accumulated gas to dissipate. Keep your face and hands as far away from the grill as possible. Insert a lit extended match or lighter through the cooking grids to the burner. Press the control knob and rotate left to the HI setting, continue to press the knob until the burner ignites. Burner should light immediately. If the burner does not light in 4 seconds turn the knob off, wait 5 minutes and try again.

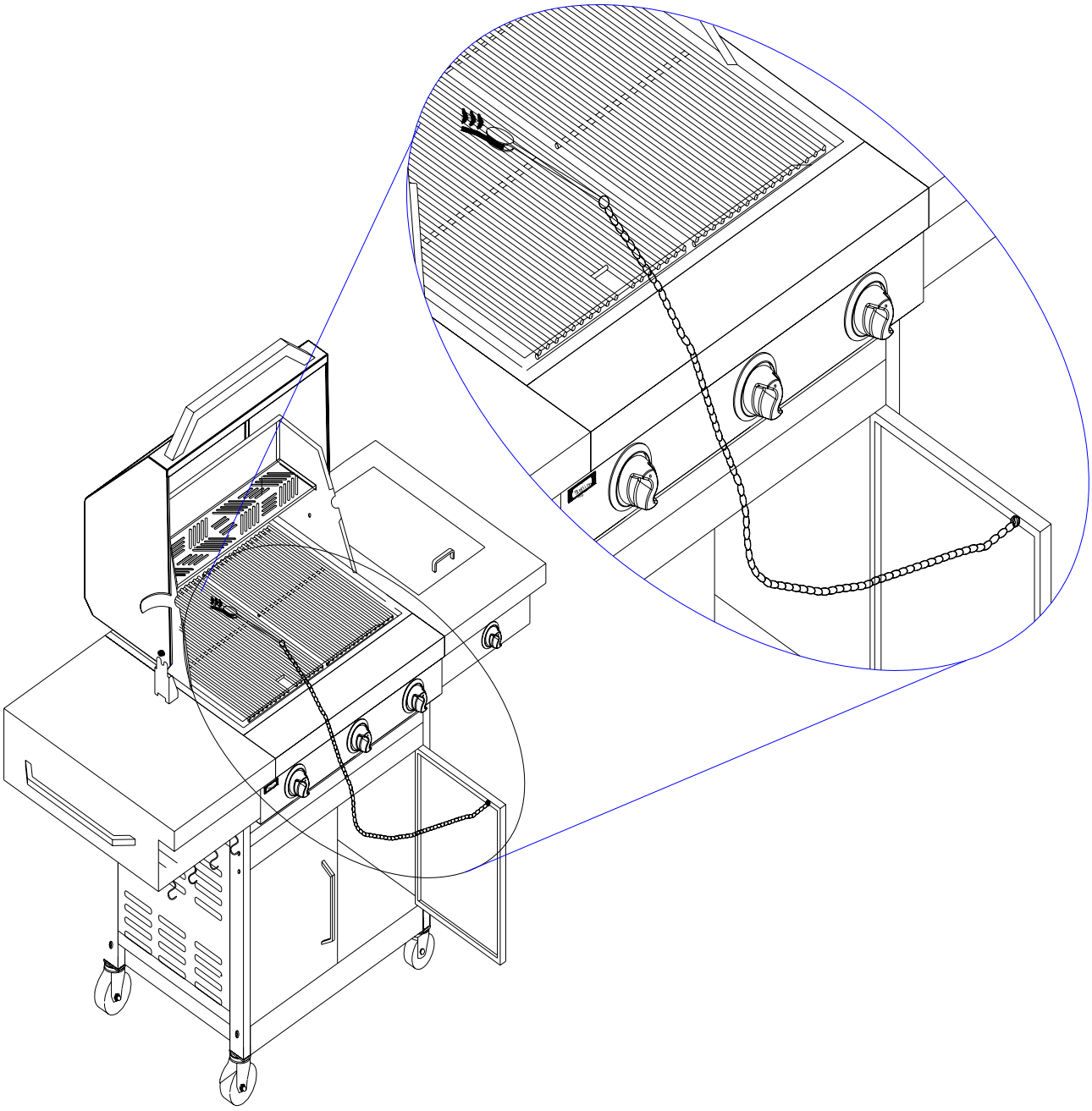

GAS HOOK-UP

Only the pressure regulator and hose assembly supplied with the grill should be used. Any replacement pressure regulator and hose assembly must be specified by the grill manufacturer.

This is a liquid propane configured grill. Do not attempt to use a natural gas supply unless the grill has been reconfigured for natural gas use.

Total gas consumption (per hour) of SF2456 grill with all burners on "HI":

3 Main burners	36,000 Btu/hr.
1 Side burner	12,000 Btu/hr.
Total	48,000 Btu/hr.

L.P. Tank Requirements
A dented or rusty L.P. tank may be hazardous and should be checked by your L.P. supplier. Never use a cylinder with a damaged valve. The L.P. gas cylinder must be constructed and marked in accordance with the specifications for L.P. gas cylinders of the U.S. Department of Transportation (DOT), or the National Standard of Canada, CAN/CSA-B339, Cylinders, Spheres and Tubes for Transportation of Dangerous Goods; and Commission.

The cylinder must be provided with a shut valve terminating in an L.P. gas supply cylinder valve outlet specified, as applicable, for connection type QCC1 in the standard for compressed gas cylinder valve outlet and inlet connection ANSI/CGA-V-1.

The cylinder supply system must be arranged for vapor withdrawal. The cylinder must include a collar to protect the cylinder valve.

Manifold pressure: (operating): 10" water column (W.C.), (non-operating): 11.2" water column (W.C.).

L.P. GAS HOOK-UP:
Ensure that the black plastic grommets on the LP cylinder valve are in place and that the hose does not come into contact with the grease tray or the grill head.

CONNECTION:
Your grill is equipped with gas supply orifices for use only with liquid propane gas. It is also equipped with a high capacity hose/regulator assembly for connection to a standard 20lb. L.P. cylinder (18-1/4" high, 12-1/4" diameter).

To connect the L.P. gas supply cylinder, please follow the steps below:

1. Make sure tank valve is in its full off position (turn clockwise to stop)
2. Check tank valve to assure it has proper external male threads (type 1 connection per ANSIZ21.81)
3. Make sure all burner valves are in their off position.
4. Inspect valve connections, port, and regulator assembly. Look for any damage or debris. Remove any debris. Inspect hose for damage. Never attempt to use damaged or obstructed equipment. See your local L.P. gas dealer for repair.
5. When connecting regulator assembly to the valve, hands tighten the nut clockwise to a complete stop. Do not use a wrench to tighten. Use of a wrench may damage the quick coupling nut and result in a hazardous condition.
6. Open the tank valve fully (counterclockwise). Use a soapy water solution to check all connections for leaks before attempting to light the grill, see below. If a leak is found, turn the tank valve off and do not use the grill until a local L.P. gas dealer can make repairs.

To disconnect L.P. gas cylinder:

1. Turn the burner valves off.
2. Turn the tank valve off fully (turn clockwise to stop).
3. Detach the regulator assembly from the tank valve by turning the quick coupling nut counterclockwise.

LEAK TESTING

GENERAL
Although all gas connections on the grill are leak tested at the factory prior to shipment, a complete gas tightness check must be performed at the installation site due to possible mishandling in shipment, or excessive pressure unknowingly being applied to the unit. Periodically check the whole system for leaks following the procedures listed below. If the smell of gas is detected at anytime you should immediately check the entire system for leaks.

BEFORE TESTING
Make sure that all packing material is removed from the grill including the burner tie-down straps.

DO NOT SMOKE WHILE LEAK TESTING.

NEVER LEAK TEST WITH AN OPEN FLAME.

Make a soap solution of one part liquid detergent and one part water. You will need a spray bottle, brush, or rag to apply the solution to the fittings. For the initial leak test, make sure the L.P. cylinder is full.

TO TEST
Make sure all control valves are in the “OFF” position. Turn the gas supply on. Check all connections from the L.P. cylinder up to and including the connection to the manifold pipe assembly (the pipe that goes to the burners). Soap bubbles will appear where a leak is present. If a leak is present, immediately turn off the gas supply, tighten any leaking fittings, turn gas on, and recheck. Should the gas continue to leak from any or all of the fittings, turn off the gas supply, and contact our customer service center.

Only those parts recommended by the manufacturer should be used on the grill. Substitution will void the warranty. Do not use the grill until all connections have been checked and do not leak.

Gas flow check:
Each grill burner is tested and adjusted at the factory prior to shipment; however, variations in the local gas supply may make it necessary to adjust the burners. The flames of the burners should be visually checked.

Flames should be blue and stable with no yellow tips, excessive noise or lifting. If any of these conditions exist, check to see if the air shutter or burner ports are blocked by dirt, debris, spider webs, etc. If you have any questions regarding flame stability, please contact our customer service center

ALWAYS CHECK FOR LEAKS AFTER EVERY L.P. TANK CHANGE

Check all gas supply fittings for leaks before each use. It is handy to keep a spray bottle of soapy water near the shut-off valve of the gas supply line. Spray all the fittings. Bubbles indicate leaks.

Disconnected L.P. cylinders must have threaded valve plugs tightly installed, and must not be stored in a building, garage or any other enclosed area.

The gas must be turned off at the supply cylinder when the unit is not in use.

If the appliance is stored indoors the cylinder must be disconnected and removed from the appliance. Cylinders must be stored outdoors in a well-ventilated area out of the reach of children.

INSTALLER FINAL CHECK CHECKLIST

- ❒ Specified clearance maintained 24” from combustibles.
- ❒ All internal packaging removed.
- ❒ Knobs turn freely.
- ❒ Burners are tight and sitting properly on orifices.
- ❒ Pressure regulator connected and set for 11.2” W.C. L.P. gas. Gas connections to grill using hose & regulator assembly provided (pre-set for 11.0” water column).
- ❒ Unit tested and free of leaks.
- ❒ User informed of gas supply shut off valve location.

USER, PLEASE RETAIN THESE INSTRUCTIONS FOR FUTURE REFERENCE.

PROPANE CYLINDER CAUTIONS

a) Do Not store a spare LP-gas cylinder under or near this appliance.

b) NEVER fill the cylinder beyond 80 percent full.

c) **If the information in “a” and “b” is not followed exactly, a fire causing death or serious injury may occur.**

GENERAL USE OF THE GRILL:

Each main burner is rated at 12,000 Btu/hr. The main grill burners encompass the entire cooking area and are side ported to minimize blockage from falling grease and debris. Above the burners is stainless steel radiant (flame covers). The igniter knobs are located on the lower center portion of the valve panel. Each rotary igniter is labeled on the control panel.

USING THE GRILL:

Grilling requires high heat for searing and proper browning. Most foods are cooked at the “HI” heat setting for the entire cooking time. However, when grilling large pieces of meat or poultry, it may be necessary to turn the heat to a lower setting after the initial browning. This cooks the food through without burning the outside. Foods cooked for a long time or foods basted with a sugary marinade may need a lower heat setting near the end of the cooking time.

To begin:

1. Make sure the grill has been leak tested and is properly located.

2. Remove any remaining packing material.

3. Light the grill burners using the instructions in this manual.

4. Turn the control knob(s) to “HI” and preheat the grill for 15 minutes. The grill lid is to be closed during the appliance preheat period.

5. Place the food on the grill and cook to the desired doneness. Adjust heat setting, if necessary. The control knob may be set to any position between “HI” and “LO”.

NOTE: The grill is designed to grill efficiently without the use of lava rocks or briquettes of any kind. Heated are radiated by the stainless steel flame tamers positioned above each burner.

NOTE: The hot grill sears the food, sealing in the juices. The longer preheat, the faster the meat browns and the darker the grill marks.

DO NOT LEAVE THE GRILL UNATTENDED WHILE COOKING.

LIGHTING INSTRUCTIONS

WARNING: IMPORTANT!

WARNING
Failure to open grill lid during the lighting procedure could result in a fire or explosion that could cause serious bodily injury, death, or property damage.

WARNING
Never lean over the grill cooking area while lighting your gas grill. Keep your face and body a safe distance (at least 18 inches) from the cooking grid surface when lighting your grill by match.

BEFORE LIGHTING…

Inspect the gas supply hose prior to turning the gas "ON". If there is evidence of cuts, wear, or abrasion, it must be replaced prior to use. Do not use the grill if the odor of gas is present. Only the pressure regulator and hose assembly supplied with the unit should be used. Never substitute regulators for those supplied with the grill. If a replacement is necessary, contact the factory for proper replacement.

Screw the regulator (type QCC1) onto the tank. Leaks check the hose and regulator connections with a soap and water solution before operating the grill (see assembly instruction page 11).

TO LIGHT THE GRILL BURNER:

Make sure all knobs are "OFF" then turn on the gas supply from the LP tank. Always keep your face and body as far from the grill as possible when lighting.

Your grill has an exclusive patented built-in ignition. The igniter is built in to the valve. To ignite each burner simply push and turn the control knobs to the HI setting, you will hear the valve click as it sends a spark to the pilot flame. If the burner does not light, wait 5 minutes for any excess gas to dissipate and then retry.

Flame Characteristics:

Check for proper burner flame characteristics. Each burner is adjusted prior to shipment; however, variations in the local gas supply may take minor adjustments necessary.

Burner flames should be blue and stable with no yellow tips, excessive noise, or lifting. If any of these conditions exist call our customer service line. If the flame is yellow, it indicates insufficient air. If the flame is noisy and tends to lift away from the burner, it indicates too much air.

TO MATCH LIGHT THE GRILL:

If the burner will not light after several attempts then the burner can be match lit.

If you've just attempted to light the burner with the igniter, allow 5 minutes for any accumulated gas to dissipate. Keep your face and hands as far away from the grill as possible. Insert a lit extended match or lighter through the cooking grids to the burner. Press the control knob and rotate left to the HI setting, continue to press the knob until the burner ignites. Burner should light immediately. If the burner does not light in 4 seconds turn the knob off, wait 5 minutes and try again.

Keep a spray bottle of soapy water near the gas supply valve and check the connections before each use.

LIGHTING ILLUSTRATIONS

Main Burner Lighting Illustration

1. Make sure the lid is open

2. Push and turn one of main burner knob to HI position

3. After the burner is lit, adjust the knob as desired

Side Burner Lighting Illustration

1. Push and turn the side burner knob to HI position

2. After the burner is lit, adjust the knob as desired

CARE & MAINTENANCE

IMPORTANT
-Keeping outdoor cooking gas appliance area clear and free from combustible materials, gasoline and other flammable vapors and liquids.
-Not obstructing the flow of combustion and ventilation air.
-Keeping the ventilation opening(s) of the cylinder enclosure free and clear from debris.
-Visually checking burner flames, with pictorial representations.
-Cleaning outdoor cooking gas appliance, including special surfaces, with recommended cleaning agents, if necessary.
-Checking and cleaning burner/venture tubes for insects and insect nests. A clogged tube can lead to a fire beneath the grill.

STAINLESS STEEL
The grill is made from non-rusting and non-magnetic stainless steel. There are many different stainless steel cleaners available. Always use the mildest cleaning procedure first, scrubbing in the direction of the grain. To touch up noticeable scratches in the stainless steel, sand very lightly with dry 100 grit emery papers in the direction of the grain. Specks of grease can gather on the surfaces of the stainless steel and bake on to the surface and give the appearance of rust. For removal use an abrasive pad in conjunction with a stainless steel cleaner.

GRILL RACK
The easiest way to clean the grill is immediately after cooking is completed and after turning off the flame. Wear a barbeque mitt to protect your hand from the heat and steam. Dip a brass bristle barbeque brush in tap water and scrub the hot grill. Dip the brush frequently in the bowl of water. Steam, created as water contacts the hot grill, assists the cleaning process by softening any food particles. The food particles will fall and burn. If the grill is allowed to cool before cleaning, cleaning will be more difficult.

ENSURE THAT THE GAS SUPPLY AND THE KNOBS ARE IN THE "OFF" POSITION. MAKE SURE THE RANGETOP BURNER IS COOL BEFORE REMOVAL.

GRILL BURNERS
Extreme care should be taken when moving a burner, as it must be correctly centered on the orifice before any attempt is made to relight the grill. Frequency of cleaning will depend on how often you use the grill.

GRILL BURNER CLEANING
Ensure the gas supply is off and the knobs are in the "OFF" position. Make sure the grill is cool. Clean the exterior of the burner with a wire brush. Clear stubborn scale with a metal scraper, clear any clogged ports with a straightened paper clip. Never use a wooden toothpick as it may break off and clog the port. Please note if insects or other obstructions are blocking the flow of gas through the burner, and if so you will need to call our customer service line.

GREASE TRAY CLEANING:
The grease tray should be emptied and wiped down periodically and washed in a mild detergent and warm water solution. A small amount of sand or cat litter may be placed in bottom of grease tray to absorb the grease. Checks the grease tray frequently, doesn't allow excess grease to accumulate and overflow out of the grease tray.

EXPLODED VIEW

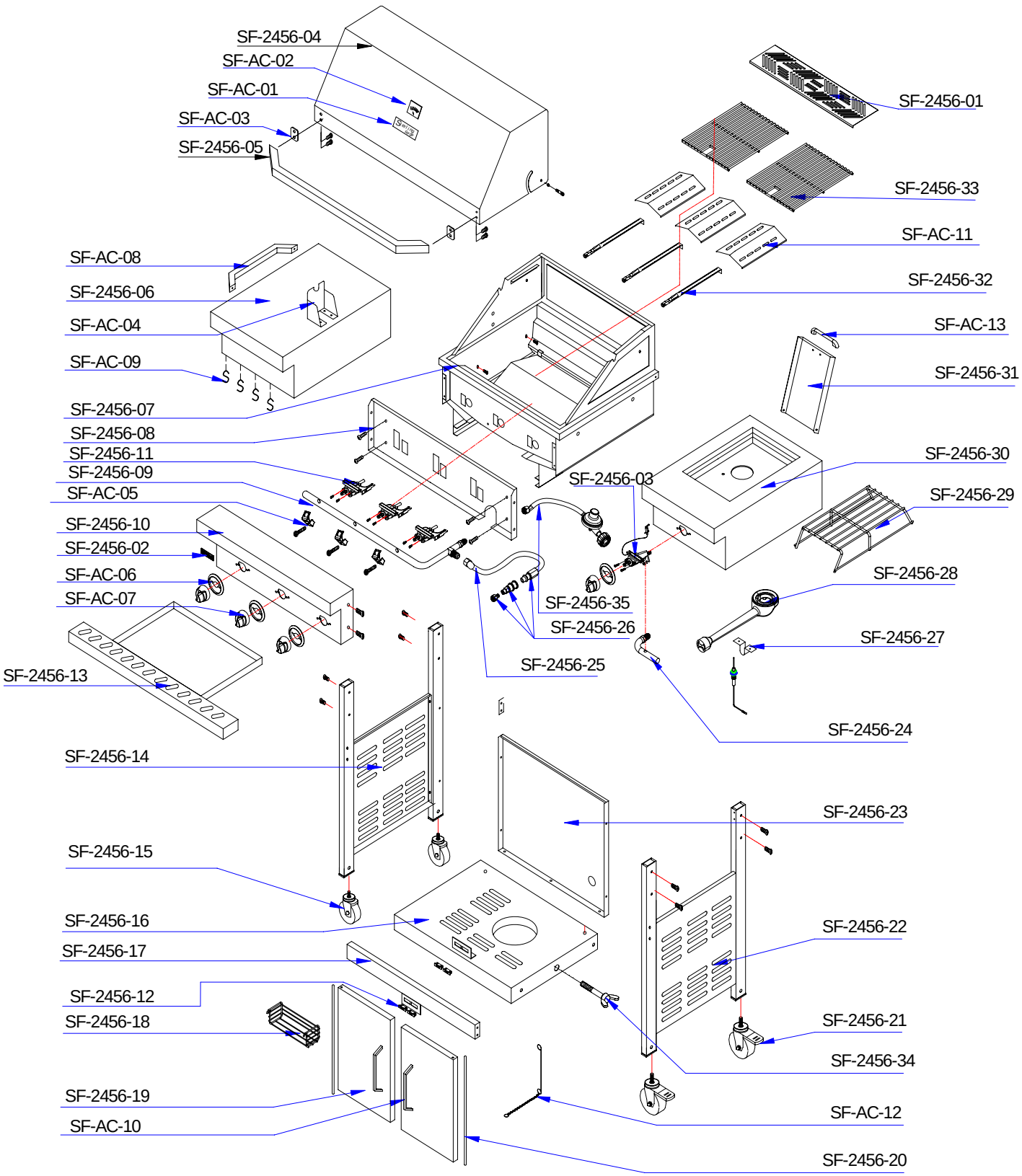

PARTS LIST

MODEL # 720-0322
Sterling Forge SKU # SF2456

REF#	DESCRIPTION	Q'TY	REF#	DESCRIPTION	Q'TY
SF-AC-01	Name Plate,Lid	1	SF-2456-13	Grease Tray	1
SF-AC-02	Silver Heat Indicator	1	SF-2456-14	Left Panel for cart	1
SF-AC-03	Heat Insulating Spacer	2	SF-2456-15	3″Caster	2
SF-AC-04	Motor Bracket	1	SF-2456-16	Bottom Panel for cart	1
SF-AC-05	Manifold Retainer Bracket	4	SF-2456-17	Door Frame	1
SF-AC-06	Control Knob Seat	4	SF-2456-18	Spice Rack	1
SF-AC-07	"S"Control Knob	4	SF-2456-19	Door Assembly	2
SF-AC-08	Push Bar	1	SF-2456-20	Door Axes	2
SF-AC-09	Utensil Hook	4	SF-2456-21	3□active caster	2
SF-AC-10	Door Handle	2	SF-2456-22	Right Panel for cart	1
SF-AC-11	Flame Tamer	3	SF-2456-23	Back Panel for cart	1
SF-AC-12	Lighting Rod	1	SF-2456-24	Manifold, Side Burner	1
SF-AC-13	Handle Side Burner Lid	1	SF-2456-25	PVC Hose	1
SF-2456-01	Warming Rack	1	SF-2456-26	Quick Connector	1
SF-2456-02	Name Plate, Control Panel	1	SF-2456-27	Burner Bracket Side Burner	1
SF-2456-03	Side Burner Gas Valve	1	SF-2456-28	Burner, Side Burner	1
SF-2456-04	Main Lid	1	SF-2456-29	Side Burner Cooking Grid	1
SF-2456-05	Main Lid Handle Assembly	1	SF-2456-30	Side Burner Bowel Assembly	1
SF-2456-06	Left Side Shelf	1	SF-2456-31	Side Burner Lid	1
SF-2456-07	Main Bowl Assembly	1	SF-2456-32	Main Burner	3
SF-2456-08	Front Baffle	1	SF-2456-33	Cooking Grid With Hole	2
SF-2456-09	Manifold	1	SF-2456-34	Retention Screw	1
SF-2456-10	Control Panel	1	SF-2456-35	LP Regulator	1
SF-2456-11	Main Gas Valve	3			
SF-2456-12	Door Magnet	2			

TROUBLE SHOOTING

SPIDER AND INSECT WARNING!!!
Spiders and insects can nest in the burners of this or any other grill, and cause the gas to flow from the front of the burner. This is a very dangerous condition which can cause a fire to occur behind the valve panel, thereby damaging the grill and making it unsafe to operate.

WHEN TO LOOK FOR SPIDERS
You should inspect the burners at least once a year or immediately after any of the following conditions occur:

1. The smell of gas in conjunction with the burner flames appearing yellow.
2. The grill does not reach temperature.
3. The grill heats unevenly.
4. The burners make popping noises.

BEFORE CALLING FOR SERVICE
If the grill does not function properly, use the following checklist before contacting your dealer for service. You may save the cost of a service call.

CHECK LIST

PROBLEMS	WHAT TO DO
Grill won't light when the control knob is rotated.	Check to see if LP tank is empty. Clean wire(s) and/or electrode by rubbing with alcohol and clean swab.
	Wipe with dry cloth. Make sure the wire is connected to electrode assembly.
	Do other burners on the unit operate? Check to see if other burners operate. If so, check the gas orifice on the malfunctioning burner for an obstruction.
Burner flame is yellow or orange, in conjunction with the odor of gas.	Call the customer service line
Low heat with knob in "HI" position.	Is the fuel hose bent or kinked?
	Is the grill in a dusty area?
	Is there adequate gas supply available? If it is only one burner that appears low, does the orifice or burner need cleaning?
	Is the gas supply, or gas pressure low?
	Is the grill being preheated for 15 minutes?

GRILLING HINTS

The doneness of meat, whether rare, medium, or well done, is affected to a large degree by the thickness of the cut. Expert chefs say it is impossible to have a rare doneness with a thin cut of meat.

The cooking time is affected by the kind of meat, the size and shape of the cut, the temperature of the meat when cooking begins, and the degree of doneness desired.

When defrosting meats it is recommended that it be done overnight in the refrigerator as opposed to a microwave. This in general yields a juicier cut of meat.

Use a spatula instead of tongs or a fork to turn the meat, as a spatula will not puncture the meat and let the juices run out.

To get the juiciest meats, add seasoning or salt after the cooking is finished on each side and turn the meat only once (juices are lost when the meat is turned several times). Turn the meat just after the juices begin to bubble to the surface.

Trim any excess fat from the meat before cooking. To prevent steaks or chops from curling during cooking, slit the fat around the edges at 2-inch intervals.

DO NOT LEAVE THE GRILL UNATTENDED WHILE COOKING.

GRILL COOKING CHART

FOOD	WEIGHT OR THICKNESS	FLAME SIZE	APPROXIMATE TIME	SPECIAL INSTRUCTIONS AND TIPS
VEGETABLES				
Fresh Beets		Medium	12 to 20 minutes	Slice. Dot with butter or margarine. Wrap in heavy-duty foil. Grill, turning occasionally.
Carrots		Medium	12 to 20 minutes	Slice. Dot with butter or margarine. Wrap in heavy-duty foil. Grill, turning occasionally.
Turnips		Medium	12 to 20 minutes	Grill, turning once. Brush occasionally with melted butter or margarine.
Onion	1/2 inch slices	Medium	8 to 20 minutes	Grill, turning once. Brush occasionally with melted butter or margarine.
Potatoes Sweet	Whole	Medium	40 to 60 minutes	Wrap individually in heavy-duty foil. Grill, rotating occasionally.
White	6 to 8 ounces	High	45 to 60 minutes	Wrap individually in heavy-duty foil. Grill, rotating occasionally.

Frozen Asparagus Broccoli Brussels Sprouts Green beans Peas		Medium	15 to 30 minutes	Dot with butter or margarine. Wrap in heavy-duty foil. Grill, turning occasionally.
French fries		Medium	15 to 30 minutes	Place in aluminum foil pan. Grill, stirring occasionally.
MEATS Beef				
Hamburgers	1/2 to 3/4 inch	Medium High	10 to 18 minutes 8 to 15 minutes	Grill, turning once when juices rise to the surface. Do not leave hamburgers unattended since a flare-up could occur quickly.
Steaks				
Rib eye,				
FOOD	WEIGHT OR THICKNESS	FLAME SIZE	APPROXIMATE TIME	SPECIAL INSTRUCTIONS AND TIPS
Tenderloin, Porterhouse, T-Bone, Sirloin				
Rare	1 inch 1-1/2 inch	High High	8 to 14 minutes 11 to 18 minutes	Remove excess fat from edge. Slash remaining fat at 2-inch intervals. Grill, turning once.
Medium	1 inch 1-1/2 inch	Medium to High	12 to 22 minutes 16 to 27 minutes	
Well-done	1 inch 1-1/2 inches	Medium Medium	18 to 30 minutes 16 to 35 minutes	
Lamb Chops & Steaks				
Rare	1 inch 1-1/2 inch	High High	10 to 15 minutes 14 to 18 minutes	Remove excess fat from edge. Slash remaining fat at 2-inch intervals. Grill, turning once.

Medium	1 inch 1-1/2 inch	Medium to High	13 to 20 minutes 18 to 25 minutes	
Well-done	1 inch	Medium	17 to 30 minutes	
Pork Chops Well-done	1 inch 1-1/2 inches	Medium Medium	20 to 30 minutes 30 to 40 minutes	Remove excess fat from edge. Slash remaining fat at 2-inch intervals. Grill, turning once. Cook well done.
Ribs		Medium	30 to 40 minutes	Grill, turning occasionally. During last few minutes brush with barbecue sauce, turn several times.
Pork Ham steaks (precooked)	1/2 inch slices	High	4 to 8 minutes	Remove excess fat from edge. Slash remaining fat at 2-inch intervals. Grill, turning once.
Hot dogs		Medium	5 to 10 minutes	Slit skin. Grill, turning once.
POULTRY Broiler/fryer Halved or Quartered well-done	2 to 3 pounds	Low or Medium	1 to 1-1/2 hours 40 to 60 minutes	Place skin side up. Grill, turning and brushing frequently with melted butter, margarine, oil or marinade.
Breasts well-done		Medium	30 to 45 minutes	
FOOD	WEIGHT OR THICKNESS	FLAME SIZE	APPROXIMATE TIME	SPECIAL INSTRUCTIONS AND TIPS
FISH AND SEAFOOD Steaks Halibut Salmon Swordfish	3/4 to 1 inch	Medium to High	8 to 15 minutes	Grill, turning once. Brush withmelted butter, margarine or oil to keep moist.
Whole Catfish Rainbow trout	4 to 8 ounces	Medium to High	12 to 20 minutes	Grill, turning once. Brush with melted butter, margarine or oil.

GRILL RECIPE SUGGESTION

BBQ SALMON

2 large salmon steaks
2 tbs. Oil
Salt & pepper
2 oz. thin bacon slices
2 tbs. Butter
1 tbs. Lemon juice
Spring of parsley
Lemon wedges

Preheat the BBQ.

Brush the steaks with oil and season with salt and pepper. Place on BBQ grill and cook for 10 minutes, turning steaks over halfway cooking time.

Meanwhile fry the bacon in a pan on the side burner. Drain on paper towels. Meld the butter in a small saucepan taking care not to discolor it. Arrange the fish and bacon on serving plates. Pour the butter over and sprinkle with lemon juice. Garnish with parsley springs and lemon wedges. Serve with boiled potatoes tossed in butter and sprinkled with chopped parsley and a crisp lettuce salad.

Note: Substitute catfish, halibut or cod for salmon.

PORK CHOPS

4 Pork chops
Marinade
1 large onion
2 tbs. lemon juice or vinegar
2 tbs. oil
½ tsp. powdered mustard
2 tsp. Worcestershire sauce
½ tsp. freshly ground black pepper
1 tsp. sugar
½ tsp. paprika
1 clove garlic
Peel, grate onion, adds rest of the ingredients except the pork chops. Mix well. Pour over chops and marinate one hour in a cool place. Turn the BBQ grill on full. Heat 10 minutes. BBQ the chops brushing with the marinade occasionally. Serve with mixed salad, dressed with vinaigrette flavored with fresh dill.

BARBECUED LONDON BROIL

4 to 6 servings

¾ c. Italian dressing
1 tsp. Worcestershire sauce
1 tsp. dried mustard
¼ tsp. thyme, crushed
1 medium onion, sliced
1 pound flank steak, scored
2 tbs. butter, melted

Combine first 4 ingredients, add onion and marinade flank steak with it. Refrigerate at least 4 hours or overnight. Remove steak and grill on your preheated BBQ grill. Grill 5 to 7 minutes each side basting frequently with the marinades. In the meantime sauté onions from the marinade in butter in a skillet on your side burner for 3 minutes. To serve, slice steak diagonally into thin slices, sprinkle onions over top. Garnish with vegetable kabobs.

BAKED CHILI CORN

6 medium ears corn, husked
3 tbs. Butter or margarine, melted
Dash ground cumin
Dash ground coriander

About ½ hour before cooking, turn the butter on for grill. Place each corn on a heavy-duty foil. In a bowl, combine remaining ingredients. Mix well. Brush 1-1/2 tsp. Butter mixture over each ear. Close foil and fold up ends to seal. Place on grill. Cook, turning packets occasionally 10 to 12 minutes or until cooked through.

TANGY SEAFOOD KABOBS

1 lb. large shrimp, shelled & defined
¾ lbs. sea scallops
2/3 c. chili sauce
¼ c. cider vinegar
3 tbs. chopped parsley
1 tbs. vegetable oil
1 tbs. Worcestershire sauce
½ tsp. prepared horseradish
1 cove garlic, minced
1 20 oz. Can pineapple chunks in juice, drained

In medium bowl, combine shrimp and scallops. In small bowl combine chili sauce and next six ingredients. Pour over seafood. Toss to coat. Cover refrigerates 2 hours. Half-hour before cooking, turn the burner to the grill on full. Drain seafood-reserving marinade. On each of twelve 10” skewers, thread 2 shrimps and 2 scallops, alternating with pineapple chunks. Place skewers on grill. Cook 7-10 minutes, often basting and turning.

BARBECUED POTATOES and CHEESE

1-1/2 cups shredded cheddar cheese
1 can (10-3/4 oz.) condensed cream of mushroom soup
1/3 cup milk
2 tbs. barbecue sauce
¼ tsp. oregano
¼ tsp. salt
1/8 tsp. pepper
4 cups thinly sliced potatoes (4 medium-sized potatoes)

Preheat grill. Combine cheese, condensed soup, milk, BBQ sauce, oregano, salt and pepper in a large mixing bowl. Stir in potatoes until well coated. Turn into well buttered1-1/2 quart rectangular baking dish. Cover dish with aluminum foil. Bake covered 25 minutes on medium with the lid of your BBQ grill closed. Remove foil and continue baking 15 minutes longer or until potatoes are tender. Let stand 5 minutes before serving.

VEGETABLE KABOBS

3 medium-sized zucchini
12 cherry tomatoes
12 fresh mushrooms
Grated Parmesan cheese

Parboil whole zucchini 5 minutes on your side burner or until just tender. Drain and cut into ½ inch slices. Thread zucchini, tomatoes and mushrooms alternately on each of six skewers. Brush with marinade made of

Italian dressing, Worcestershire sauce, mustard and thyme. Grill 5 to 7 minutes turning and basting occasionally. Sprinkle liberally with Parmesan cheese.

FAJITAS

1-1/2 lb. flank steak or boned chicken breasts
2 tbs. oil
½ cup limejuice
½ tsp. salt
½ tsp. celery salt
¼ tsp. garlic powder
½ tsp. pepper
¼ tsp. oregano
¼ tsp. cumin
Flour tortillas lemon

Pound flank steak to ¼ inch thickness or flatten chicken breasts. Mix oil, lime juice and seasonings in a zip lock bag. Add meat and shake bag to coat the meat. Refrigerate overnight or at least 6 to 8 hours. Wrap tortillas in foil. Remove meat from marinade Cook on a pre-heated gas grill for 5 to 8

minutes on each side. While meat is cooking, heat tortillas on grill. Slice meat across grain in thin slices. Place on hot platter. Squeeze lemon juice over. Wrap meat and any of the following toppings in tortillas: chopped tomatoes, guacamole, sour cream, and taco sauce.

BEEF AND LAMB KABOBS

Serve 4
½ lb. boneless sirloin or beef cut into 1” cubes
½ lb. boneless loin of lamb cut into 1” cubes
2/3 c. water, divided
¼ c. chopped onion
2 tbs. soy sauce
¼ c. vegetable oil, divided
1 tbs. dark brown sugar
1 tbs. fresh lemon juice
2 cloves garlic, minced
¼ tsp. ground cumin
¼ tsp. ground coriander
¼ tsp. ground turmeric
1/8 tsp. ground red pepper
1/8 tsp. ground ginger
1 red pepper cut into chunks
1 large banana, cut into chunks
8 small mushrooms

1/3 c. smooth peanut butter

In blender, process 1/3 c. water, onion, soy sauce, 2 tsp. oil and the next 8 ingredients until smooth. Pour over meat cubes and marinate about 4 hours, turning occasionally. Drain and reserve marinade. Onto to four 12” skewers alternately thread meat, pepper, banana and mushrooms. Preheat grill. Brush the kabobs with oil. Grill 7-8 minutes each side.

Bring marinade to boil on the side burner in a saucepan. Add remaining 1/3 c. water and peanut butter. Stir to blend. Heat through. If sauce gets too thick, add 1 tbs. water. Serve sauce with kabobs.

EGGPLANT CAVIAR

1 large eggplant
2 tbs. olive oil
2 tbs. wine vinegar
2 tbs. finely chopped onion
½ clove garlic, minced
1 medium tomato, chopped salt and pepper

Roast eggplant on gas grill over medium flame, turning occasionally until thoroughly cooked. This may take 30 minutes. Remove from grill and cool for handling. Strip off the skin and chop eggplant finely. Add all the seasonings. Chill thoroughly and serve on toast.

CHICKEN TANDOORI STYLE

8 large chicken thighs or drumsticks
1 c. plain nonfat yogurt
½ c. lemon juice
2 tsp. salt
½ tsp. cayenne
½ tsp. black pepper
½ tsp. crushed garlic
½ tsp. grated ginger
1 tbs. corn oil

Combine all the ingredients in a large mixing bowl and marinate the chicken for 8 hours in the refrigerator. Drain the chicken and spread on the spit running the rod on the fleshier side of the bone.

Rotis using the rotis burner. Cook on medium high heat for 40 minutes

basting occasionally with the remainder of the marinade mixture. Serve with sliced onions and lemon wedges.

SPARE RIBS

Marinade:
1 c. soy sauce
½ c. honey
½ c. vinegar
½ c. dry sherry
2 tsp. chopped garlic
2 tsp. sugar
1 c. water
1 chicken bouillon cube
1 can beer for basting sauce

Marinade ribs for 3 hours. Use marinade for basting by adding beer to it. Place pan under the ribs and baste frequently. To cook ribs select lean, meaty ribs and accordion pleat them with your spit.

Slide four prong meat hook down the length of spit and tighten. At the beginning of the rack and to its center, penetrate the second rib with the pointed end of the spit and push it between the meat. Skip a couple and continue the process until the entire rack is accordion pleated. Fasten the second meat hook into the rack. Turn your rotis burner on high. Rotis for 50 minutes or until done.

PORK ROAST

Apple cider vinegar basting sauce:
1 c. apple cider vinegar
6 oz. water
½ stick butter
Salt, pepper, parsley and garlic seasoning
2 oz. lemon juice
10 lbs. pork roast

Time: 1-1/2 hours to 2 hours

Bring pork to room temperature before placing it on the spit rod. Place on the rod and test for balance. Light rotis burner. Turn control knob to high. Use the above basting sauce for rotissing.

TURKEY

12 lb. turkey
Beer basting sauce:
1 can beer
12 oz. water
1 stick butter
1 tsp. salt
1 tsp. pepper
½ tsp. garlic flakes
1 tsp. parsley

Thaw the bird completely. Wash inside out. Securely tie the legs and wings. Light rotis burner. Turn to high. Combine all the ingredients for basting sauce in a shallow pan. Place it under the turkey 15 to 20 minutes. Cook for approximately 3 hours. The basting sauce combined with turkey drippings makes a delicious gravy.

LIMITED WARRANTY

LIMITED WARRANTY
MODEL 720-0322
Sterling Forge SKU# SF2456
STAINLESS STEEL OUTDOOR GAS GRILL

Sterling Forge warrants to the original consumer purchaser of each Outdoor Gas Grill that when subject to normal residential use, it is free from defects in workmanship and materials for the periods specified below. This warranty excludes grills used in rental or commercial applications. There will be a shipping and handling charge for the delivery of the warranty part(s).

Component	**Warranty Period:**
Burners:	Lifetime
Stainless Steel Flame Tamer:	3 Years
Stainless Steel Cooking Grids:	3 Years
Valves:	1 Year
Frame, Housing, Cart, Control Panel, Igniter, and Related Parts:	1 Year
All Stainless Steel Parts	3 Years

Our obligation under this warranty is limited to repair or replacement, at our option, of the product during the warranty period. The extent of any liability of *Sterling Forge* under this warranty is limited to repair or replacement. This warranty does not cover normal wear of parts, damage resulting from any of the following: negligent use or misuse of the product, use on improper fuel/gas supply, use contrary to operating instructions, or alteration by any person other than our factory service center. The warranty period is not extended by such repair or replacement.

Product repair as provided under this warranty is your exclusive remedy. *Sterling Forge* shall not be liable for any incidental or consequential damages for breach of any express or implied warranty on its products. Except to the extent prohibited by applicable law, any implied warranty or merchantability or fitness for a particular purpose on this product to the duration of the above warranty. Some states do not allow the exclusion or limitation of incidental or consequential damages, or allow limitations on how long an implied warranty lasts, so the above limitations or exclusions may not apply to you. This warranty gives you specific legal rights, and you may have other rights, which vary from state to state.

Printed In China