This Owner's Manual is provided and hosted by Appliance Factory Parts.

Appliance Factory Parts
Experts in BBQ, Humidifier, & Appliance Parts
1-800-955-7075

LG MS-113ME
Owner's Manual

Shop genuine replacement parts for LG MS-113ME

Find Your LG Microwave Parts - Select From 955 Models

-------- Manual continues below --------

GoldStar

website:http://us.lgservice.com

MICROWAVE OVEN

OWNER'S MANUAL & COOKING GUIDE

PLEASE READ THIS OWNER'S MANUAL THOROUGHLY BEFORE OPERATING.

MA-1012W/B
MA-1020W/B
MA-1112W/B

TABLE OF CONTENTS

SAFETY 3-4
Precautions to Avoid Possible Exposure To Excessive Microwave Energy 3
Grounding Instructions 3
Important Safety Instructions 4

UNDERSTANDING YOUR MICROWAVE OVEN 5-10
Specifications 5
Installation 5
Parts and Accessories 6
Control Panel 7
Cookware Guide 8
Tips for Microwave Cooking 9
Precautions 10
Cleaning 10

USING YOUR MICROWAVE OVEN.....11-20
Setting the Clock 11
Child Lock.....11
Timer 12
EZ On.....12
Timed Cooking 12
Muti-Stage Cooking 13
Microwave Power Levels 13
One Touch Cooking 14
One Touch Cook Chart 15
More/Less 16
Q-Defrost.....16
Auto Defrost 17
Auto Defrost Chart 18
Cooking Tips 19-20

HEATING OR REHEATING GUIDE 21

FRESH VEGETABLE CHART 22

TROUBLESHOOTING 23-25
Questions and Answers 23-24
Before Calling for Service 25

WARRANTY 27

Thank You for purchasing a GoldStar microwave oven.

Please record the model number and serial number of this unit for future reference. We also suggest you record the details of your contact with GoldStar (LG Electronics U.S.A., Inc.) concerning this unit.

Staple your receipt here for proof of retail purchase.

Model No: _____

Serial No: _____

Dealer: _____

_____

_____

Dealer Phone No: _____

Customer Relations
LG Electronics U.S.A., Inc.
Service Divison Bldg. #3
201 James Record Rd.
Huntsville, AL 35824-0126

Important Notes:

DO NOT remove the wave guide cover inside the oven.

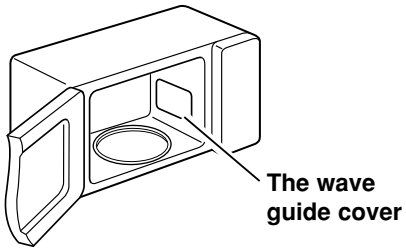

PRECAUTIONS TO AVOID POSSIBLE EXPOSURE TO EXCESSIVE MICROWAVE ENERGY

- **Do not attempt to operate this oven with the door open,** since open-door operation can result in harmful exposure to microwave energy. It is important not to defeat or tamper with the safety interlocks.
- **Do not place any object between the oven front face and the door,** or allow soil or cleaner residue to accumulate on sealing surfaces.
- **Do not operate the oven if it is damaged.** It is particularly important that the oven door closes properly and that there is no damage to the:
  - door (bent),
  - hinges and latches (broken or loosened),
  - door seals and sealing surfaces.
- **The oven should not be adjusted or repaired** by anyone except properly qualified service personnel.

GROUNDING INSTRUCTIONS

This appliance must be grounded. In the event of an electrical short circuit, grounding reduces the risk of electric shock by providing an escape wire for the electric current. This appliance is equipped with a cord having a grounding wire and a grounding plug. The plug must be plugged into an outlet that is properly installed and grounded.

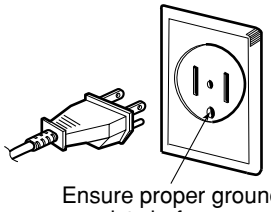

Ensure proper ground exists before use

⚠ WARNING ⚠

Improper grounding can result in a risk of electric shock. Consult a qualified electrician if the grounding instructions are not completely understood, or if doubt exists as to whether the appliance is properly grounded, and either:

1. If it is necessary to use an extension cord, use only a 3-wire extension cord that has a 3-blade grounding plug, and a 3-slot receptacle that will accept the plug on the appliance. The marked rating of the extension cord shall be equal to or greater than the electrical rating of the appliance, or. . . .
2. Do not use an extension cord. If the power supply cord is too short, have a qualified electrician or serviceman install an outlet near the appliance.

NOTES:

1. A short power-supply cord is provided to reduce the risks resulting from becoming entangled in or tripping over a longer cord.
2. Longer cord sets or extension cords are available and may be used if care is exercised in their use.
3. If a long cord or extension cord is used, (1) the marked electrical rating of the cord set or extension cord should be at least as great as the electrical rating of the appliance, (2) the extension cord must be a grounding-type 3-wire cord, and (3) the longer cord should be arranged so that it will not drape over the countertop or tabletop where it can be pulled on by children or tripped over accidentally.

IMPORTANT SAFETY INSTRUCTIONS

The safety instructions below will tell you how to use your oven to avoid harm to yourself or damage to your oven.

WARNING - To reduce the risk of burns, electric shock, fire, injury to persons, or exposure to excessive microwave energy:

1. Read all instructions before using the appliance.

2. Read and follow the specific **PRECAUTIONS TO AVOID POSSIBLE EXPOSURE TO EXCESSIVE MICROWAVE ENERGY** found on page 3 of this manual.

3. This appliance must be grounded. Connect only to properly grounded outlet. See **GROUNDING INSTRUCTIONS** found on page 3 of this manual .

4. Install or locate this appliance only in accordance with the provided installation instructions.

5. Some products, such as whole eggs and sealed containers – for example, closed glass jars are able to explode and should not be heated in this oven.

6. Use this appliance only for its intended use as described in the manual. Do not use corrosive chemicals or vapors in this appliance. This type of oven is specifically designed to heat, cook, or dry food. It is not designed for industrial or laboratory use.

7. As with any appliance, close supervision is necessary when used by children.

8. Do not operate this appliance if it has a damaged cord or plug, if it is not working properly, or if it has been damaged or dropped.

9. This appliance should be serviced only by qualified service personnel. Contact the nearest authorized service facility for examination, repair, or adjustment.

10. Do not cover or block any openings on the appliance.

11. Do not store this appliance outdoors. Do not use this product near water – for example, near a kitchen sink, in a wet basement, near a swimming pool, or similar location.

12. Do not immerse cord or plug in water.

13. Keep cord away from heated surfaces.

14. Do not let cord hang over the edge of a table or counter.

15. When cleaning surfaces of door and oven that come together on closing the door, use only mild, nonabrasive soaps or detergents applied with a sponge or soft cloth.

16. To reduce the risk of fire in the oven cavity:

a. Do not over cook food. Carefully attend appliance when paper, plastic, or other combustible materials are placed inside the oven to facilitate cooking.

b. Remove wire twist-ties from paper or plastic bags before placing bag in oven.

c. If materials inside the oven ignite, **KEEP OVEN DOOR CLOSED,** turn oven off, and disconnect the power cord or shut off power at the fuse or circuit breaker panel.

d. Do not use the cavity for storage purposes. Do not leave paper products, cooking utensils, or food in the cavity when not in use.

17. Liquids, such as water, coffee, or tea are able to be overheated beyond the boiling point without appearing to be boiling. Visible bubbling or boiling when the container is removed from the microwave oven is not always present. THIS COULD RESULT IN VERY HOT LIQUIDS SUDDENLY BOILING OVER WHEN THE CONTAINER IS DISTURBED OR A SPOON OR OTHER UTENSIL IS INSERTED INTO THE LIQUID. To reduce the risk of injury to persons; 1) Do not overheat the liquid. 2) Stir the liquid both before and halfway through heating it. 3) Do not use straight-sided containers with narrow necks. 4) After heating, allow the container to stand in the microwave oven for a short time before removing the container. 5) Use extreme care when inserting a spoon or other utensil into the container.

18. Avoid heating small-necked containers such as syrup bottles.

19. Avoid using corrosive and vapors, such as sulfide and chloride.

20. Liquids heated in certain shaped containers (especially cylindrical-shaped containers) may become overheated. The liquid may splash out with a loud noise during or after heating or when adding ingredients (instant coffee, etc.), resulting in harm to the oven and possible injury. In all containers, for best results, stir the liquid several times before heating. Always stir liquid several times between reheatings.

SAVE THESE INSTRUCTIONS

SPECIFICATIONS

MODEL	MA-1012W/B	MA-1020W/B	MA-1112W/B
Power Supply	120 V AC, 60 Hz	120 V AC, 60 Hz	120 V AC, 60 Hz
Rated Power Consumption	1,500 W	1,250 W	1,500 W
Microwave Output	1000 W	850 W	*1150 W
Frequency	2,450 MHz	2,450 MHz	2,450 MHz
Rated Current	13.0 A	11.3 A	11.3 A
Overall Dimensions (WxHxD)	20 1/8″ x 12″ x 15 5/16″	20 1/8″ x 12″ x 15 5/16″	20 7/8″ x 12 3/8″ x 15 1/2″
Oven Cavity Dimensions (WxHxD)	13 3/8″ x 8 7/8″ x 14 1/8″	13 3/8″ x 8 7/8″ x 14 1/8″	13 3/8″ x 8 7/8″ x 14 1/8″
Capacity of Oven Cavity	1.0 Cu.ft.	1.0 Cu.ft.	1.1 Cu.ft.

*IEC 60705 RATING STANDARD
Specifications subject to change without prior notice.

INSTALLATION

A. Circuits

For safety purposes this oven must be plugged into a 15 or 20 Amp circuit. No other electrical appliances or lighting circuits should be on this line. If in doubt, consult a licensed electrician.

B. Voltage Warning

The voltage used at the wall receptacle must be the same as specified on the oven name plate located on the back or on the side of the control panel of the oven. Use of a higher voltage is dangerous and may result in a fire or other type of accident causing oven damage. Low voltage will cause slow cooking. In case your microwave oven does not perform normally in spite of proper voltage, remove and reinsert the plug.

C. Placement of the Oven

Your microwave oven can be placed easily in your kitchen, family room, or anywhere else in your home. Place the oven on a flat surface such as a kitchen countertop or a specially designed microwave oven cart. Do not place oven above a gas or electric range. Free air flow around the oven is important. Allow at least 4 inches of space at the top, sides, and back of the oven for proper ventilation.

D. Do not block the air vents

All air vents should be kept clear during cooking. If air vents are covered during oven operation the oven may overheat. In this case, a sensitive thermal safety device automatically turns the oven off. The oven will be inoperable until it has cooled sufficiently.

E. Radio interference

1. Microwave oven operation may interfere with TV or radio reception.
2. When there is interference, it may be reduced or eliminated by taking the following measures:
   a. Clean the door and the sealing surfaces of the oven.
   b. Reorient the receiving antenna of radio or television.
   c. Relocate the microwave oven in relation to the TV or radio.
   d. Move the microwave oven away from the receiver.
   e. Plug the microwave oven into a different outlet so that microwave oven and receiver are on different branch circuits.

UNDERSTANDING YOUR MICROWAVE OVEN

PARTS AND ACCESSORIES

Your oven comes with the following accessories:
1 Use and Care Manual
1 Glass Turntable
1 Rotating Ring

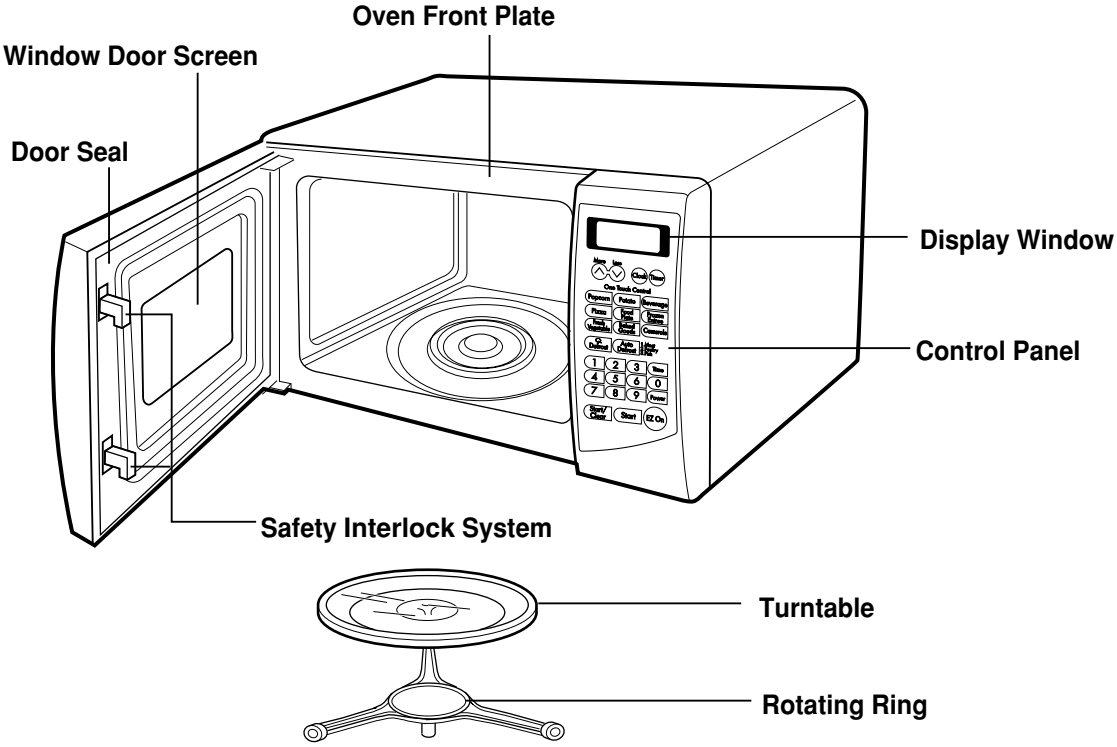

NOTE: This microwave oven is designed for household use only. It is not recommended for commercial use.

CONTROL PANEL

MA-1012W/B
MA-1020W/B

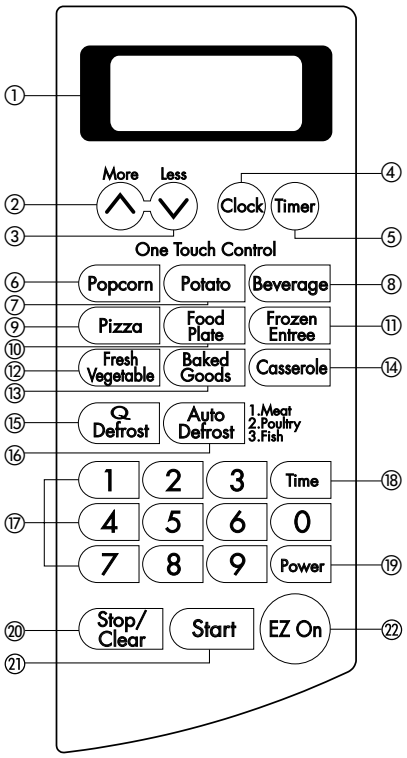

MA-1112W/B

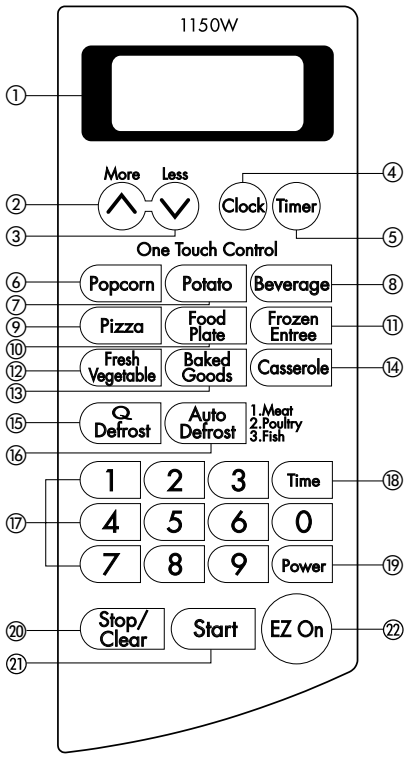

1. **DISPLAY.** The display includes a clock and indicators that tell you time of day, cooking time settings, and cooking functions selected.
2. **MORE.** Each time you touch this pad, you add 10 seconds to the cooking time.
3. **LESS.** Each time you touch this pad, you subtract 10 seconds from the cooking time.
4. **CLOCK.** Touch this pad to enter the time of day.
5. **TIMER.** Touch this pad to use your microwave oven as a kitchen timer.
6. **ONE TOUCH POPCORN.** Touch this pad to pop a bag of microwave popcorn without entering a cook power or time.
7. **ONE TOUCH POTATO.** Touch this pad to cook up to 4 potatoes without entering a cook power or time.
8. **ONE TOUCH BEVERAGE.** Touch this pad to heat up to 2 cups of beverage without entering a cook power or time.
9. **ONE TOUCH PIZZA.** Touch this pad to heat up to 3 slices of **refrigerated** pizza without entering a cook power or time.
10. **ONE TOUCH FOOD PLATE.** Touch this pad to heat a plate of food without entering a cook power or time.
11. **FROZEN ENTREE.** Touch this pad to cook a 10 oz. frozen entree without entering a cook power or time.
12. **FRESH VEGETABLE.** Touch this pad to cook fresh vegetables without entering a cook power or time.
13. **BAKED GOODS.** Touch this pad to heat up to 4 items without entering a cook power or time.
14. **CASSEROLE.** Touch this pad to heat up to 4 cups of casserole without entering a cook power or time.
15. **Q-DEFROST.** Touch this pad to thaw only 1lb of ground meat, poultry, or steaks/chops very quickly.
16. **AUTO DEFROST.** Touch this pad to thaw meat, poultry, or fish by entering a weight.
17. **NUMBER PADS.** Touch number pads to enter cooking time, power level, quantities, or weights.
18. **TIME.** Touch this pad to set a cooking time.
19. **POWER.** Touch this pad to set a cooking power.
20. **STOP/CLEAR.** Touch this pad to clear entries.
21. **START.** Touch this pad to start or stop all entries (except the ONE TOUCH and EZ ON functions, which start automatically) and to turn Child Lock on or off.
22. **EZ ON.** Touch this pad to cook at 100% cook power for 1 minute to 99 minutes, 59 seconds.

COOKWARE GUIDE

Most heat-resistant, non-metallic cookware is safe for use in your microwave oven. However, to test cookware before using, follow these steps:

1. Place the empty cookware in the microwave oven.
2. Measure 1 cup of water in a glass measuring cup and place it in the oven beside the cookware.
3. Microwave on 100% power for 1 minute. If the dish is warm, it **should not** be used for microwave cooking.

USE	DO NOT USE
Ovenproof Glass • Glass treated for use in high-intensity heat includes utility dishes, bread dishes, pie plates, cake plates, liquid measuring cups, casseroles, and bowls without metallic trim. **China** • Bowls, cups, serving plates, and platters without metallic trim can be used in your oven. **Plastic** • When using plastic wrap as a cover, make sure that the dish is deep enough so the plastic wrap does not touch the food. As the food heats, it may melt the plastic wrap wherever the wrap touches the food. • Place plastic wrap loosely over the top of the dish and secure it by pressing the wrap to the sides of the dish. • Vent by turning back one corner of the plastic wrap. This will allow excess steam to escape. • Use plastic dishes, cups, semi-rigid freezer containers, and plastic bags **only for short time cooking. Use these with care because the plastic may soften from the heat of the food.** **Paper** • Microwave-safe paper towels, waxed paper, paper napkins, and paper plates with no metallic trim or design can be used in your oven. • Refer to the manufacturer's label for use of any paper product in the microwave oven.	**Metal Utensil** • Metal shields food from microwave energy and produces uneven cooking. Avoid metal skewers, thermometers, or foil trays. • Metal utensils can cause arcing, which is a discharge of electric current. Arcing can damage your microwave oven. **Metal Decoration** • Do not use metal-trimmed or metal-banded dinnerware, casserole dishes, etc. **Centura™ Tableware** • The Corning Company recommends that you **do not use** Centura tableware and some Corelle™ closed-handle cups for microwave cooking. **Aluminum Foil** • Avoid large sheets of aluminum foil because they hinder cooking and may cause arcing. • Use small pieces of foil to shield poultry legs and wings. • Keep **all** aluminum foil at least 1 inch from the walls and door of the oven. **Wood** • Wooden bowls, boards, and baskets will dry out and may split or crack when you use them in the microwave oven. **Tightly Closed Containers** • Tightly closed cookware can explode. Be sure to leave an opening for steam to escape from covered cookware. **Brown Paper** • Avoid using brown paper bags. They absorb heat and could burn. **Metal Twist Ties** • Always remove metal twist ties as they can become hot and cause a fire.

TIPS FOR MICROWAVE COOKING

BROWNING
Meat and poultry with high fat content that are cooked for 10 or 15 minutes or longer will brown lightly. Foods cooked a shorter time can be brushed with a browning agent, such as Worcestershire sauce, soy sauce, or barbecue sauce.

COVERING
A cover traps heat and steam and causes the food to cook more quickly. Use a lid or microwave-safe plastic wrap with one corner folded back to vent the excess steam. Lids on glass casseroles can become hot during cooking. Handle carefully. Waxed paper will prevent the food from splattering in the oven and help retain heat. When warming bread items, use waxed paper, napkins, or paper towels. To absorb extra moisture, wrap sandwiches and fatty foods in paper towels.

SPACING
Arrange individual foods, such as baked potatoes, cupcakes, and hors d'oeuvres in a circle and at least 1 inch apart. This will help the food cook more evenly.

STIRRING
Stirring blends flavors and redistributes the heat in foods. Always stir from the outside toward the center of the dish. Food at the outside of the dish heats first.

TURNING
Large foods, such as roasts and whole poultry, should be turned so that the top and bottom cook evenly. Also turn over chicken pieces and chops.

ARRANGEMENT
Do not stack food. Arrange in a single layer in the dish for more even cooking. Because dense foods cook more slowly, place thicker portions of meat, poultry, fish, and vegetables toward the outside of the dish.

TESTING FOR DONENESS
Because foods cook quickly in a microwave oven, you need to test frequently for doneness.

STANDING TIME
Food often needs to stand from 2 to 15 minutes after you remove it from the oven. Usually, you need to cover food during standing time to retain heat. Remove most foods when they are slightly undercooked and they will finish cooking during standing time. The internal temperature of food will rise about 10 °F during standing time.

SHIELDING
To prevent some portions of rectangular or square dishes from overcooking, you may need to shield them with small strips of aluminum foil to block the microwaves. You can also cover poultry legs and wing tips with foil to keep them from overcooking. **Always keep foil at least 1 inch from oven walls** to prevent arcing.

PIERCING
Pierce the shell, skin, or membrane of foods before cooking to prevent them from bursting. Foods that require piercing include yolks and whites of eggs, hot dogs, clams, oysters, and whole vegetables, such as potatoes and squash.

PRECAUTIONS

- Place the front surface of the door three inches or more from the countertop edge to avoid accidental tipping of the microwave oven during normal use.
- To program the oven, make sure you touch the center of each pad firmly since the areas between the pads will not activate the oven. A tone will sound each time a pad is touched correctly. Don't touch several pads at once.
- Do not strike the control panel with silverware, utensils, etc. Breakage may occur.
- Always use caution when taking the cooking utensils out of the oven. Some dishes absorb heat from the cooked food and may be hot. See Cookware Guide earlier in this section for more information.
- Do not rinse cooking utensils by placing them in water immediately after cooking. This may cause breakage. Also, always allow the turntable to cool before removing it from the oven.
- Never operate the oven when it is empty. Food or water should always be in the oven during operation to absorb the microwave energy.
- Do not use the oven to dry newspapers or clothes. They may catch fire.
- Use thermometers that have been approved for microwave oven cooking.
- The turntable must always be in place when you operate the oven.
- Do not use your microwave oven to cook eggs in the shell. Pressure can build up inside the shell, causing it to burst.
- There are several precautions to follow when microwaving popcorn:
  - — Do not pop popcorn, except in a microwave-safe container or commercial packages designed for microwave ovens.
  - — Never try to pop popcorn in a paper bag that is not microwave-approved.
  - — Overcooking may result in smoke and fire.
  - — Do not repop unpopped kernels.
  - — Do not reuse popcorn bags.
  - — Listen while corn pops. Stop oven when popping slows to 2-3 seconds between pops.
  - — Do not leave microwave unattended while popping corn.
  - — Follow directions on bag.

CLEANING

NOTE: Before cleaning the oven, unplug the power cord. If this is impossible, open the oven door to prevent an accidental oven start.

INTERIOR

Wipe the oven inside and outside with a soft cloth and a mild detergent solution. Then rinse and wipe dry. This should be done weekly or more often, if needed. Never use cleaning powders or rough pads.
Excessive oil splatters on the inside top will be difficult to remove if left for many days. Wipe splatters with a wet paper towel, especially after cooking chicken or bacon.

REMOVABLE PARTS

The turntable and rotating ring are removable. They should be hand-washed in warm (not hot) water with a mild detergent and a soft cloth. Once they are clean, rinse well and dry with a soft cloth. Never use cleaning powders, steel wool, or rough pads.

- The turntable may be cleaned at the sink. Be careful not to chip or scratch the edges as this may cause the turntable to break during use.
- The rotating ring should be cleaned regularly.

DOOR

For best performance and safety, the inner door panel and the oven front frame should be free of food or grease buildup. Wipe often with a mild detergent; then rinse and wipe dry. Never use cleaning powders or rough pads.

After cleaning the control panel, touch STOP/CLEAR to clear any entries that might have been entered accidentally while cleaning the panel. Also make sure that the turntable and rotating ring are in the right position.

SETTING THE CLOCK

When your oven is plugged in or after a power interruption, 0 shows on the display.

Example: To set the clock for 11:11.

Touch:		Display Shows:
1. Stop/Clear	once.	0
2. Clock	once.	ENTER 12:00 TIME
3. 1	four times.	11:11
4. Clock	to start the clock.	11:11

CHILD LOCK

You can use this safety feature to lock the control panel so that children cannot use the oven when you do not want them.

To set CHILD LOCK:

Touch:		Display Shows:
1. Stop/Clear	once.	
2. 0	Hold until LOCK appears in the display.	LOCK

To cancel CHILD LOCK:

Touch:		Display Shows:
0	Hold until LOCK disappears from the display.	0

TIMER

Your microwave oven can be used as a kitchen timer. You can set up to 99 minutes, 99 seconds.

Example: To set 3 minutes.

Touch: **Display Shows:**

1. Timer once.

2. 3 0 0

3. Start to start the timer. Time counting down.

* If you want to cancel the TIMER, touch TIMER during time counting down.

EZ ON

This time-saving feature lets you cook at 100% power for up to 99 minutes, 59 seconds.
1 minute are added to the cook time each time you press EZ On.

Example: To cook for 1 minutes.

Touch: **Display Shows:**

1. Ez On Twice.

(Time counting down.)

2. At the end of the cook time, four tones will sound. The oven will stop.

TIMED COOKING

This feature lets you program a specific cook time and power. For best results, there are 10 power level settings in addition to HIGH power (100%). Refer to the Microwave Power Level Chart on page 13 for more information.

NOTE: If you do not select a power level, the oven will automatically cook at HIGH (100%) power.

Example: To cook for 5 minutes, 30 seconds at 80% power.

Touch: **Display Shows:**

1. Time once.

2. 5 3 0

to set a cook time of 5 minutes, 30 seconds.

3. Power once.

4. 8 to set a cook power of 80%.

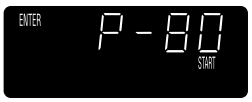

5. Start to start oven.

(Time counting down.)

6. At the end of the cook time, four tones will sound. The oven will stop.

MULTI-STAGE COOKING

For best results, some recipes call for different cook powers during different stages of a cook cycle. You can program your oven to switch from one power level to another for up to 2 stages.

NOTE: If you are using the AUTO DEFROST feature as one of the cooking stages, it must be programmed as the first stage.

Example: To set a 2-stage cook cycle.

Touch:	Display Shows:
1. Time once.	ENTER 0 COOK TIME
2. 3 0 0 to set a 3 minute cook time for the first stage.	ENTER 3 00 START
3. Power once.	ENTER POWER P-H1 COOK
4. 8 to set an 80% cook power for the first stage.	ENTER P-80 START
5. Time once.	ENTER 0 COOK TIME
6. 7 0 0 to set a 7 minute cook time for second stage.	ENTER 7 00 START
7. Power once.	ENTER POWER P-H1 COOK
8. 5 to set a 50% cook power for the second stage.	ENTER P-50 START
9. Start to start the oven.	3:00 COOK

10. When the first stage is over, you will hear two short tones as the oven begins the second cook stage.

11. At the end of the cooking time, four tones will sound. The oven will stop.

END

MICROWAVE POWER LEVELS

Your microwave oven has 10 cook power levels to let you cook or heat a wide variety of foods. Refer to the chart below for suggestions:

Microwave Power Level Chart

Power Level	Use
10 (High)	• Boiling water. • Making candy. • Cooking poultry pieces, fish, & vegetables. • Cooking tender cuts of meat. • Whole poultry.
9	• Reheating rice, pasta, & vegetables.
8	• Reheating prepared foods quickly. • Reheating sandwiches.
7	• Cooking egg, milk, & cheese dishes. • Cooking cakes, breads. • Melting chocolate.
6	• Cooking veal. • Cooking whole fish. • Cooking puddings & custard.
5	• Cooking ham, whole poultry, & lamb. • Cooking rib roast, sirloin tip.
4	• Thawing meat, poultry, & seafood.
3	• Cooking less tender cuts of meat. • Cooking pork chops, roast.
2	• Taking chill out of fruit. • Softening butter.
1	• Keeping casseroles & main dishes warm. • Softening butter & cream cheese.
0	• Standing time.

ONE TOUCH COOKING

Use this function to cook food without entering a cook time or power. Refer to the One Touch Cook Chart below for more information.

Example: To cook a 3.5 oz. bag of microwave popcorn.

Touch:	Display Shows:
1. Popcorn once.	3.50 AUTO COOK
2. The oven will start automatically.	(Time counting down.)
3. At the end of cooking time four tones will sound. The oven will stop.	END

Example 2: To cook 1 potato.

Touch:	Display Shows:
1. Potato once.	1 AUTO COOK
2. The oven will start automatically.	(Time counting down.)
3. At the end of cooking time four tones will sound. The oven will stop.	END

ONE TOUCH COOK CHART

NOTE: No cover is needed for the ONE TOUCH foods listed in this chart unless called for in the directions.

Pad	Touch keypad	Serving size	Quantity	Directions
POPCORN	**1 time** **2 times** **3 times**	**3.5 oz.** **3.0 oz.** **1.75 oz.**	**3.5 oz.** **3.0 oz.** **1.75 oz.**	• Follow package instructions. • Use popcorn package which is made especially for microwave cooking. • Do not try to pop unpopped kernels. • Heat only 1 package at a time. • Do not leave the microwave oven unattended while popping popcorn.
BEVERAGE	**1 time** **2 times**	**1 cup** **2 cups**	**240 cc per cup**	• Use mug or microwave-safe cup. • Stir after reheating.
POTATO	**1 time** **2 times** **3 times** **4 times**	**1 ea (10 oz.)** **2 ea (20 oz.)** **3 ea (30 oz.)** **4 ea (40 oz.)**	**8-10 oz. each**	• Place in center of the oven on paper towel. • Pierce potato several times with fork. • After cooking, let stand for 5 minutes.
PIZZA	**1 time** **2 times** **3 times**	**1 slice (5 oz.)** **2 slices (10 oz.)** **3 slices (15 oz.)**	**5 oz.** **10 oz.** **15 oz.**	• Place the refrigerated pizza on the plate in the center of the microwave oven.
FROZEN ENTREE		**10 oz.**	**10 oz.**	• Follow the package instructions. • Example of one frozen entrée is Lasagna with Meat Sauce, Chicken with Rice, Sliced Turkey Breast with Rice and Vegetable.
FOOD PLATE	**1 time** **2 times**	**1 serving** **2 servings**	**10 oz.** **15 oz.**	• Arrange food on microwave plate. • Place meaty portions and bulky vegetable to the outside of the plate. • Cover with plastic wrap and vent. • After cooking, let stand for 2 minutes.
FRESH VEGETABLE	**1 time** **2 times** **3 times** **4 times**	**1 cup** **2 cups** **3 cups** **4 cups**	**4 oz.** **8 oz.** **12 oz.** **16 oz.**	• Prepare vegetable (wash and cut into 1/2-inch pieces). • Most vegetables need 2 to 3 minutes standing time to finish cooking. 1 cup – Add 2 tablespoons water 2 cups – Add 1/4 cup water 3 cups – Add 1/3 cup water 4 cups – Add 1/2 cup water
BAKED GOODS	**1 time** **2 times** **3 times** **4 times**	**1 ea** **2 ea** **3 ea** **4 ea**	**2 oz.** **4 oz.** **6 oz.** **8 oz.**	• Place in the center of the oven on a paper towel.
CASSEROLE	**1 time** **2 times** **3 times** **4 times**	**1 cup** **2 cups** **3 cups** **4 cups**	**1 cup** **2 cups** **3 cups** **4 cups**	• Place in the center of the oven. • Cover with plastic wrap and vent.

MORE/LESS

By using the More and Less functions, you can adjust the cook time for One Touch Cook for a longer or shorter time. Pressing More will add 10 seconds to the cooking time each time you press it. Pressing Less will subtract 10 seconds from the cooking time each time you press it.

Example: To adjust the One Touch (Popcorn) cooking time for a longer time.

Touch:	Display Shows:
1. Popcorn	3:50 (AUTO COOK)
2. The oven will start automatically.	(Time counting down.)
3. More / Less	Remaining time will increase or decrease by 10 seconds.

Q-DEFROST

Three quick defrost sequences are preset in the oven. The Q-Defrost feature provides you with the quick defrosting method for 1.0 pound frozen foods. The oven automatically sets the defrosting time for each food.

Example: To defrost 1lb of Poultry.

Touch:	Display Shows:
1. Q Defrost touch 1 times continuously.	1:40 (DEF)
2. The oven will start automatically.	(Time counting down.)

NOTES: When the oven will sound a tone during time counting down, Open the door and turn, separate, or rearrange food.

AUTO DEFROST

AUTO DEFROST thaws frozen food without entering a cook time or cook power. Three defrost categories are preset in your oven: Meat, Poultry, and Fish. See the Auto Defrost Chart below.

NOTES:

- For added convenience, AUTO DEFROST has a built-in reminder tone to tell you when to check, turn over, separate, or rearrange food. The oven will sound a tone during the defrost cycle. At the tone, open the door and turn, separate, or rearrange food. Remove any portions that have thawed. Return frozen portion to the oven and touch START to resume the defrost cycle.
- You can defrost foods that weigh 0.1 to 6.0 lbs (0.1-4.0 kgs).

For best results:

- Remove fish, shellfish, meat, and poultry from its original closed paper or plastic package (wrapper). Otherwise, the wrap will hold steam and juice close to the foods, which can cause the outer surface of the foods to cook.
- Shape ground meat into the form of a doughnut before freezing. When defrosting, remove thawed meat when the reminder tone sounds and continue defrosting.
- Place foods in a shallow container or on a microwave roasting rack to catch drippings.
- Food should still be somewhat icy in the center when removed from the oven.

Example: To defrost 1.2 lbs. of ground beef.

Touch:	Display Shows:
1. Auto Defrost once for Meat.	ENTER MEAT AUTO WEIGHT DEF
2. 1 2 to enter 1.2 lbs.	ENTER 1.2LB AUTO DEF START
3. Start to start the oven.	(Time counting down.)
4. At the end of the defrost time, four tones will sound. The oven will stop.	END

AUTO DEFROST CHART

Category	Touch keypad	Food to be Defrosted	At Reminder Tone	Standing Time
MEAT	**1 time**	**Beef**		
		Ground beef	Turn over. Remove thawed portions and break apart. Return remainder to oven.	5 min.
		Cubes for stew	Turn over. Remove thawed portions with fork.	5 min.
		Hamburger patties	Turn over.	5 min.
		Pot roast	Turn over. Cover warm areas with aluminum foil.	10-20 min.
		Rib roast, Rump roast, Chuck roast	Same as above.	10-20 min.
		Pork		
		Bacon, Hot dogs	Turn over.	2 min.
		Sausage links	Turn over.	5 min.
		Sausage patties	Turn over.	5 min.
		Ribs, Roast	Turn over. Cover warm areas with aluminum foil.	10-20 min.
		Lamb		
		Ribs	Turn over. Cover warm areas with aluminum foil.	10-20 min.
		Roasts	Same as above.	10-20 min.
POULTRY	**2 times**	**Poultry**		
		Whole Chicken	Turn over. Finish defrosting breast-side down. Cover warm areas with aluminum foil.	10-20 min. Rinse under cold running water.
		Chicken Pieces	Separate pieces and rearrange.	5-10 min.
		Cornish Hens: Whole, Split	Turn over. Cover warm areas with aluminum foil.	10-20 min. Rinse under cold running water.
		Turkey		
		Breast (under 6 lbs.)	Turn over and arrange.	10-20 min. Rinse under cold running water.
FISH	**3 times**	**Beef Steaks**	Turn over. Cover warm areas with aluminum foil.	10-20 min.
		Pork Chops	Same as above.	10-20 min.
		Lamp Chops	Same as above.	10-20 min.
		Fish		
		Steaks, whole fish	Turn over and rearrange. Cover head and tail with foil.	5 min.
		fillets	Turn over. Separate fillets when partially thawed if possible.	5 min. Rinse with cold water to separate.
		Shellfish		
		Crabmeat, Shrimp	Rearrange and break apart.	5 min.
		Lobster tails	Turn over and rearrange.	5 min.
		Scallops	Turn over and rearrange.	5 min.

WARNING: Do not use aluminum foil during cooking cycle.

COOKING TIPS

Meat

1. No special techniques are required. Meat should be prepared as with conventional cooking. Season if desired. Always thoroughly defrost meat before cooking.
2. Place the meat on a microwave roasting rack or microwave-proof plate and place on the turntable.
3. Cook according to the Meat Cooking Chart (below). Use the longer time for large meats and the shorter time for smaller meats. For thicker chops, use the longer time.
4. Turn the meat once halfway through the cooking time.
5. **Let stand** for 5-10 minutes wrapped in foil after cooking. The standing time is very important as it completes the cooking process.
6. Make sure meat, especially pork, is thoroughly cooked before eating.

Meat Cooking Chart

Meat	Microwave Power	Cooking Time Per Pound (min.)	
		MA-1020W/B	MA-1012W/B MA-1112W/B
BEEF			
Standing/Rolled Rib			
– Rare	8	9 to 10	8 to 10
– Medium	8	10 to 12	9 to 11
– Well-done	8	11 to 14	10 to 13
Ground Beef (to brown for casserole)	HIGH(100%)	6 to 9	5½ to 8½
Hamburgers, Fresh or defrosted (4 oz. each)			
– 2 patties	HIGH(100%)	3 to 5	2 to 4
– 4 patties	HIGH(100%)	4 to 6	3 to 5
PORK			
Loin, Leg	8	12 to 16	11 to 15
Bacon			
– 4 slices	HIGH(100%)	3 to 4	2 to 3
– 6 slices	HIGH(100%)	4 to 5	3 to 4

NOTE: The times listed above are only a guide. Allow for difference in individual tastes and preferences. The times may also vary due to the shape, cut, and composition of the food.

Poultry

1. No special techniques are required. Poultry should be prepared as with conventional cooking. Season if desired.
2. Poultry should be thoroughly defrosted. Remove giblets and any metal clamps.
3. Prick the skin and brush lightly with vegetable oil unless the poultry is self-basting.
4. All poultry should be placed on a microwave roasting rack or a microwave-proof plate and placed on the turntable.
5. Cook according to the instructions in the Poultry Cooking Chart below. Turn over halfway through the cooking time. Because of its shape, poultry has a tendency to cook unevenly, especially in very bony parts.Turning during roasting helps to cook these areas evenly.
6. **Let stand** for 5-10 minutes wrapped in foil after cooking before carving. The standing time is very important, as it completes the cooking process.
7. Make sure poultry is thoroughly cooked before eating. Whole poultry is completely cooked when the juices run clear from the inside thigh when it is pierced with a sharp knife. Poultry pieces should be pierced with a sharp knife through the thickest part to ensure that the juices are clear and the flesh is firm.

Poultry Cooking Chart

Poultry	Microwave Power	Cooking Time Per Pound (min.)	
		MA-1020W/B	MA-1012W/B MA-1112W/B
CHICKEN			
Whole	8	11 to 15	10 to 14
Breast (boned)	8	10 to 14	9 to 13
Portions	8	11 to 17	10 to 16
TURKEY			
Whole	8	11 to 15	10 to 14

NOTES:

- The times listed above are only a guide. Allow for difference in individual tastes and preferences. The times may also vary due to the shape, cut, and composition of the food.
- If whole poultry is stuffed, the weight of the stuffed bird should be used when calculating the cooking time.

COOKING TIPS (continued)

Fish

1. Arrange fish in a large shallow non-metallic dish or casserole.
2. Cover with pierced microwave plastic wrap or casserole lid.
3. Place the dish on the turntable.
4. Cook according to the instructions in the Fresh Fish Cooking Chart below. Flakes of butter can be added to the fish if desired.
5. Let stand as directed in the Cooking Chart before serving.
6. After standing time, check to see that the fish is thoroughly cooked. The fish should be opaque and flake easily.

Fresh Fish Cooking Chart

Fish	Power	Cooking Time Per Pound (min.)		Method	Standing Time
		MA-1020W/B	MA-1012W/B MA-1112W/B		
Fish Fillets	HIGH	5 to 8	4 to 7	Add 15 to 30 ml (1 to 2 tbsp.) lemon juice	2 to 3 minutes
Whole Mackerel, Cleaned and Prepared	HIGH	5 to 8	4 to 7	–	3 to 4 minutes
Whole Trout, Cleaned and Prepared	HIGH	6 to 9	5 to 8	–	3 to 4 minutes
Salmon Steaks	HIGH	6 to 8	5 to 7	Add 15 to 30 ml (1 to 2 tbsp.) lemon juice	3 to 4 minutes

HEATING OR REHEATING GUIDE

To heat or reheat successfully in the microwave, it is important to follow several guidelines. Measure the amount of food in order to determine the time needed to reheat. Arrange the food in a circular pattern for best results. Room temperature food will heat faster than refrigerated food. Canned foods should be taken out of the can and placed in a microwavable container. The food will be heated more evenly if covered with a microwavable lid or plastic wrap and vented. Remove cover carefully to prevent steam burns. Use the following chart as a guide for reheating cooked food.

Items	Cook time (at HIGH)		Special Instructions
	MA-1020W/B	MA-1012W/B MA-1112W/B	
Sliced meat 3 slices (1/4-inch thick)	1 1/2-2 1/2 minutes	1-2 minutes	Place sliced meat on microwavable plate. Cover with plastic wrap and vent. * Note: Gravy or sauce helps to keep meat juicy.
Chicken pieces 1 breast 1 leg and thigh	2 1/2-4 minutes 2-3 1/2 minutes	2-3 1/2 minutes 1 1/2-3 minutes	Place chicken pieces on microwavable plate. Cover with plastic wrap and vent.
Fish fillet (6-8 oz.)	3-4 1/2 minutes	2-4 minutes	Place fish on microwavable plate. Cover with plastic wrap and vent.
Lasagna 1 serving (10 1/2 oz.)	5-7 minutes	4-6 minutes	Place lasagna on microwavable plate. Cover with plastic wrap and vent.
Casserole 1 cup 4 cups	1 1/2-4 minutes 6-8 1/2 minutes	1-3 1/2 minutes 5-8 minutes	COOK covered in microwavable casserole. Stir once halfway through cooking.
Casserole – cream or cheese 1 cup 4 cups	2-3 1/2 minutes 4-6 minutes	1 1/2-3 minutes 3 1/2-5 1/2 minutes	COOK covered in microwavable casserole. Stir once halfway through cooking.
Sloppy Joe or Barbecued beef 1 sandwich (1/2 cup meat filling) without bun	1 1/2 -3 minutes (1/2 cup meat filling)	1 -2 1/2 minutes	Reheat filling and bun separately. Cook filling covered in microwavable casserole. Stir once. Heat bun as directed in chart below.
Mashed potatoes 1 cup 4 cups	1 1/2-3 1/2 minutes 5 1/2-8 1/2 minutes	1-3 minutes 5-8 minutes	COOK covered in microwavable casserole. Stir once halfway through cooking.
Baked beans 1 cup	2-3 1/2 minutes	1 1/2-3 minutes	COOK covered in microwavable casserole. Stir once halfway through cooking.
Ravioli or pasta in sauce 1 cup 4 cups	3-4 1/2 minutes 8-11 1/2 minutes	2 1/2-4 minutes 7 1/2-11 minutes	COOK covered in microwavable casserole. Stir once halfway through cooking.
Rice 1 cup 4 cups	2-4 minutes 4 1/2-7 minutes	1 1/2-3 1/2 minutes 4-6 1/2 minutes	COOK covered in microwavable casserole. Stir once halfway through cooking.
Sandwich roll or bun 1 roll	30 seconds	15-30 seconds	Wrap in paper towel and place on glass mircrowavable rack
Vegetables 1 cup 4 cups	1 1/2-2 1/2 minutes 4-6 minutes	1 1/2-2 1/2 minutes 4-6 minutes	COOK covered in microwavable casserole. Stir once halfway through cooking.
Soup 1 serving (8 oz.)	2-3 minutes	1 1/2-2 1/2 minutes	COOK covered in microwavable casserole. Stir once halfway through cooking.

FRESH VEGETABLE CHART

Vegetable	Amount	Cook time at HIGH		Instructions	Standing Time
		MA-1020W/B	MA-1012W/B MA-1112W/B		
Artichokes (8oz. each)	2 medium 4 medium	5-8 10-13	5-8 10-13	Trim. Add 2 tsp water and 2 tsp juice. Cover.	2-3 minutes
Asparagus, Fresh, Spears	1lb.	4-6	3-6	Add 1/2 cup water. Cover.	2-3 minutes
Beans, Green & Wax	1 lb.	7 1/2-10	7-11	Add 1/2 cup water in 1 1/2 qt. casserole. Stir halfway through cooking.	2-3 minutes
Beets, Fresh	1 lb.	12-16	12-16	Add 1/2 cup water in 1 1/2 qt. covered casserole. Rearrange halfway through cooking.	2-3 minutes
Broccoli, Fresh, Spears	1lb.	5-8	4-8	Place broccoli in baking dish. Add 1/2 cup water.	2-3 minutes
Cabbage, Fresh, Chopped	1lb.	5-8	4-7	Add 1/2 cup water in 1 1/2 qt. covered casserole. Stir halfway through cooking.	2-3 minutes
Carrots, Fresh, Sliced	2 cups	2 1/2-4	2-4	Add 1/4 cup water in 1 qt. covered casserole. Stir halfway through cooking.	2-3 minutes
Cauliflower, Fresh, Whole	1lb.	7 1/2-11	7-11	Trim. Add 1/4 cup water in 1 qt. covered casserole. Stir halfway through cooking.	2-3 minutes
Flowerettes, Fresh Celery, Fresh, Sliced	2 cups 4 cups	2 1/2-4 1/2 6-8	2 1/2-4 1/2 6-8	Slice. Add 1/2 cup water in 1 1/2 qt. covered casserole. Stir halfway through cooking.	2-3 minutes
Corn, Fresh	2 ears	5-9	5-9	Husk. Add 2 tbsp water in 1 1/2 qt. baking dish. Cover.	2-3 minutes
Mushrooms, Fresh, Sliced	1/2 lb.	2 1/2-4	2-3 1/2	Place mushrooms in 1 1/2 qt. covered casserole. Stir halfway through cooking.	2-3 minutes
Parsnips, Fresh, Sliced	1lb.	4-8	4-8	Add 1/2 cup water in 1 1/2 qt. covered casserole. Stir halfway through cooking.	2-3 minutes
Peas, Green, Fresh	4 cups	7-10	7-10	Add 1/2 cup water in 1 1/2 qt. covered casserole. Stir halfway through cooking.	2-3 minutes
Sweet Potatoes Whole Baking (6-8 oz. each)	2 medium 4 medium	6-8 8-13	5-10 7-13	Pierce potatoes several times with fork. Place on 2 paper towels. Turn over halfway through cooking.	2-3 minutes 2-3 minutes
White Potatoes, Whole Baking (6-8 oz. each)	2 potatoes 4 potatoes	6-8 11-14	5-8 10-14	Pierce potatoes several times with fork. Place on 2 paper towels. Turn over halfway through cooking.	2-3 minutes 2-3 minutes
Spinach, Fresh, Leaf	1lb.	4 1/2-7 1/2	4-7	Add 1/2 cup water in 2 qt. covered casserole.	2-3 minutes
Squash, Acorn or Butternut, Fresh	1 medium	6 1/2-8	6-8	Cut squash in half. Remove seeds. Place in 8 x 8-inch baking dish. Cover.	2-3 minutes
Zucchini, Fresh, Sliced	1lb.	5-8	4 1/2-7 1/2	Add 1/2 cup water in 1 1/2 qt. covered casserole. Stir halfway through cooking.	2-3 minutes
Zucchini, Fresh, Whole	1lb.	6 1/2-9	6-9	Pierce. Place on 2 paper towels. Turn zucchini over and rearrange halfway through cooking.	2-3 minutes

TROUBLESHOOTING

Questions and Answers

Operation

Question	Answer
Why is the oven light not on during cooking?	There may be several reasons why the oven light is not on. Have you: • Set a cooking time? • Touched START?
Why does steam come out of the air exhaust vent?	Steam is normally produced during cooking. The microwave oven has been designed to vent this steam.
Will the microwave oven be damaged if it operates empty?	Yes. Never operate the oven empty or without the glass turntable.
Does microwave energy pass through the viewing screen in the door?	No. The metal screen bounces the energy back to the oven cavity. The holes (or ports) allow only light to pass through. They do not let microwave energy pass through.
Why does a tone sound when a pad on the control panel is touched?	The tone tells you that the setting has been entered.
Can my microwave oven be damaged if food is cooked for too long?	Like any other cooking appliance, it is possible to overcook food to the point that the food creates smoke and even possibly fire and damage to the inside of the oven. It is always best to be near the oven while you are cooking.
When the oven is plugged into wall outlet for the first time, it might not work properly. What is wrong?	The microcomputer controlling your oven may temporarily become scrambled and fail to function as programmed when you plug in for the first time or when power resumes after a power interruption. Unplug the oven from the 120-volt household outlet and then plug it back in to reset the microcomputer.
Why do I see light reflection around the outer case?	This light is from the oven light which is located between the oven cavity and the outer wall of the oven.
What are the various sounds I hear when the microwave oven is operating?	The clicking sound is caused by a mechanical switch turning the microwave oven's magnetron ON and OFF. The heavy hum and clunk is from the change in power the magnetron draws as it is turned ON and OFF by a mechanical switch.The change in blower speed is from the change in line voltage caused by the magnetron being turned ON and OFF.

Food

Question	Answer
What is wrong when baked foods have a hard, dry, brown spot?	A hard, dry, brown spot indicates overcooking. Shorten the cooking or reheating time.
Why do eggs sometimes pop?	When baking, frying, or poaching eggs, the yolk may pop due to steam build-up inside the yolk membrane. To prevent this, simply pierce the yolk before cooking. **CAUTION:** Never microwave eggs in the shell.

Questions and Answers (continued)

Food

Question	Answer
Why are scrambled eggs sometimes a little dry after cooking?	Eggs will dry out when they are overcooked, even if the same recipe is used each time. The cooking time may need to be varied for one of these reasons: • Eggs vary in size. • Eggs are at room temperature one time and at refrigerator temperature another time. • Eggs continue cooking during standing time.
Is it possible to pop popcorn in a microwave oven?	Yes, if using one of the two methods described below: (1) microwave-popping devices designed specifically for microwave cooking (2) prepackaged commercial microwave popcorn that is made for specific times and power output needed **Follow exact directions given by each manufacturer for its popcorn popping product and do not leave the oven unattended while the corn is being popped. If corn fails to pop after the suggested time, discontinue cooking. Overcooking could result in an oven fire.** **CAUTION:** • **Never use a brown paper bag for popping corn or attempt to pop leftover kernels.** • **Do not pop prepackaged commercial microwave popcorn directly on the glass turntable. To avoid excessive heating of the glass turntable, place the popcorn bag on a plate.** • **Listen while corn pops. Stop oven when popping slows to 2-3 seconds between pops.** • **Do not leave microwave unattended while popping corn.** • **Follow directions on bag.**
Why do baked apples sometimes burst during cooking?	The peel has not been removed from the top half of each apple to allow for expansion of the interior of the apple during cooking. As in conventional cooking methods, the interior of the apple expands during the cooking process.
Why do baked potatoes sometimes burn during cooking?	If the cooking time is too long, fire could result. At the end of the recommended cooking time, potatoes should be slightly firm. **CAUTION: Do not overcook.**
Why is a standing time recommended after microwave cooking time is over?	Standing time allows foods to continue cooking evenly for a few minutes after the actual microwave oven cooking cycle. The amount of standing time depends upon the density of the foods.
Why is additional time required for cooking food stored in the refrigerator?	As in conventional cooking, the initial temperature of food affects total cooking time. You need more time to cook food taken out of a refrigerator than for food at room temperature.

TROUBLESHOOTING

Before Calling for Service

You can often correct operating problems yourself. If your microwave oven fails to work properly, locate the operating problem in the list below and try the solutions listed for each problem.
If the microwave oven still does not work properly, contact the nearest GoldStar Authorized Service Center. GoldStar Authorized Service Centers are fully equipped to handle your service requirements.

Problem	Possible Causes
Oven does not start	• Is the power cord plugged in? • Is the door closed? • Is the cooking time set?
Arcing or Sparking	• Are you using approved cookware? • Is the oven empty?
Incorrect time of day	• Have you tried to reset the time of day?
Unevenly Cooked Foods	• Are you using approved cookware? • Is the glass turntable in the oven? • Did you turn or stir the food while it was cooking? • Were the foods completely defrosted? • Was the time/cooking power level correct?
Overcooked Foods	• Was the time/cooking power level correct?
Undercooked Foods	• Are you using approved cookware? • Were the foods completely defrosted? • Was the time/cooking power level correct? • Are the ventilation ports clear?
Improper Defrosting	• Are you using approved cookware? • Was the time/cooking power level correct? • Did you turn or stir the food during the defrosting cycle?

FEDERAL COMMUNICATIONS COMMISSION
RADIO FREQUENCY INTERFERENCE STATEMENT

WARNING:

This equipment generates and uses ISM frequency energy and if not installed and used properly, that is in strict accordance with the manufacturer's instructions, may cause interference to radio and television reception. It has been type tested and found to comply with limits for ISM Equipment pursuant to part 18 of FCC Rules, which are designed to provide reasonable protection against such interference in a residential installation. However, there is no guarantee that interference will not occur in a particular installation. If this equipment does cause interference to radio or television reception, which can be determined by turning the equipment off and on, the user is encouraged to try to correct the interference by one or more of the following:

- Reorient the receiving antenna of the radio or television.
- Relocate the microwave oven with respect to the receiver.
- Move the microwave oven away from the receiver.
- Plug the microwave oven into a different outlet so that the microwave oven and the receiver are on different branch circuits.

The manufacturer is not responsible for any radio or TV interference caused by **unauthorized modification** to this microwave oven. It is the responsibility of the user to correct such interference.

NOTE

GOLDSTAR MICROWAVE OVEN LIMITED WARRANTY — USA
Model MA-1012W/B MA-1020W/B MA-1112W/B

LG Electronics, Inc. will repair or replace your product, at LG's option, if it proves to be defective in material or workmanship under normal use, during the warranty period set forth below, effective from the date of original consumer purchase of the product. This warranty is good only to the original purchaser of the product and effective only when used in the United States, including U.S. Territories.

WARRANTY PERIOD:	**HOW SERVICE IS HANDLED:**
One Year from the Date of Purchase.	**Product Replacement** **Please call 1-800-243-0000 and choose the *Customer Service/Appliance* options.** (Phones are answered 24 hours a day, 365 days per year.) You will receive a certificate to purchase a replacement product from your local dealer. You will then send the purchase receipts for the original and the replacement microwave ovens, along with the purchase authorization certificate to us. We will send you a refund check for the purchase price of the original product. This gives you the opportunity to upgrade to another model or to receive the full purchase price of the original model even if you decide to purchase a less expensive model. Please visit our website at: http://us.lgservice.com

THIS WARRANTY IS IN LIEU OF ANY OTHER WARRANTY, EXPRESS OR IMPLIED, INCLUDING WITHOUT LIMITATION, ANY WARRANTY OF MERCHANTABILITY OR FITNESS FOR A PARTICULAR PURPOSE. TO THE EXTENT ANY IMPLIED WARRANTY IS REQUIRED BY LAW, IT IS LIMITED IN DURATION TO THE EXPRESS WARRANTY PERIOD ABOVE. LG WILL NOT BE LIABLE FOR ANY INCIDENTAL, CONSEQUENTIAL, INDIRECT, SPECIAL, OR PUNITIVE DAMAGES OF ANY NATURE, INCLUDING WITHOUT LIMITATION, LOST REVENUES OR PROFITS, OR ANY OTHER DAMAGE WHETHER BASED IN CONTRACT, TORT, OR OTHERWISE. Some states do not allow the exclusion or limitation of incidental or consequential damages or limitations on how long an implied warranty lasts, so the above exclusion or limitation may not apply to you. This warranty gives you specific legal rights and you may also have other rights that vary from state to state.

THIS LIMITED WARRANTY DOES NOT APPLY TO:

- Service trips to your home to deliver, pick up, and/or install the product, instruct, or replace house fuses or correct wiring, or correction of unauthorized repairs.
- Damages or operating problems that result from misuse, abuse, operation outside environmental specifications or contrary to the requirements of precautions in the Operating Guide, accident, vermin, fire, flood, improper installation, acts of God, unauthorized modification or alteration, incorrect electrical current or voltage, or commercial use, or use for other than intended purpose.

The cost of repair or replacement under these excluded circumstances shall be borne by the consumer.

CUSTOMER INTERACTIVE CENTER NUMBERS

To obtain Customer Assistance, Product Information, or Dealer or Authorized Service Center location:	**Call 1-800-243-0000** (24 hours a day, 365 days per year) and select the appropriate option from the menu. **Or visit our website at: http://us.lgservice.com**

TO CONTACT LG ELECTRONICS BY MAIL:

LG Customer Interactive Center
P. O. Box 240007
201 James Record Road
Huntsville, Alabama 35824
ATTN: CIC

LG Electronics Inc.

P/NO : 3828W5A2177

Printed in China