This Owner's Manual is provided and hosted by Appliance Factory Parts.

Appliance Factory Parts
Experts in BBQ, Humidifier, & Appliance Parts
1-800-955-7075

Kenmore 66022 Owner's Manual

Shop genuine replacement parts for Kenmore 66022

Find Your Kenmore Microwave Parts - Select From 532 Models

-------- Manual continues below --------

SEARS

MODEL 721.66022
721.66029

DIVISION 20

BASIC FIELD MANUAL FOR MICROWAVE OVEN

MODEL 721.66022500
721.66029500

August, 2005

CAUTION

WARNING TO SERVICE TECHNICIANS

PRECAUTIONS TO BE OBSERVED BEFORE AND DURING SERVICING TO AVOID POSSIBLE EXPOSURE TO EXCESSIVE MICROWAVE ENERGY

a. Do not operate or allow the oven to be operated with the door open.

b. Make the following safety checks on all ovens to be serviced before activating the magnetron or other microwave source, and make repairs as necessary; (1) Interlock operation, (2) proper door closing, (3) seal and sealing surfaces (arcing, wear, and other damage), (4) damage to or loosening of hinges and latches, (5) evidence of dropping or abuse.

c. Before turning on microwave for any service test or inspection within the microwave generating compartments, check the magnetron, wave guide or transmission line, and cavity for proper alignment, integrity, and connections.

d. Any defective or misadjusted components in the interlock, monitor, door seal, and microwave generation and transmission systems shall be repaired, repaired or adjusted by procedures described in this manual before the oven is released to the owner.

e. A Microwave leakage check to verify compliance with the Federal performance standard should be performed on each oven prior to release to the owner.

- Proper operation of the microwave ovens requires that the magnetron be assembled to the wave guide and cavity. Never operate the magnetron unless it is properly installed.

- Be sure that the magnetron gasket is properly installed around the dome of the tube whenever installing the magnetron.

- Routine service safety procedures should be exercised at all times.

- Untrained personnel should not attempt service without a thorough review of the test procedures and safety information contained in this manual.

FOREWORD

Read this Manual carefully. Failure to adhere to or observe the information in this Manual may result in exposing yourself to the Microwave Energy normally contained within the oven cavity.

MODEL 721.66022
721.66029

MECHANICAL SERVICE INFORMATION

TABLE OF CONTENTS

1. Adjustment Procedures 3
2. Precautions on Installation 5
3. General Precautions in Use 5
4. Trial Operation 5
5. Specifications 6
6. Overall Circuit Diagram 7-8
7. Operating Procedures 9-11
8. Procedure for Measuring Microwave Energy Leakage 12-13
9. Disassembly Instructions 14-18
10. Interlock Continuity Test 19
11. Test and Checkout Procedures, and Troubleshooting
    A. Test Procedures 20-22
    B. Checkout Procedures 23-25
    C. Troubleshooting 26-30
12. Exploded view 31-37
13. Part Reference list 38-41

1. ADJUSTMENT PROCEDURES

To avoid possible exposure to microwave energy leakage, adjust the door latches and interlock switches, using the following procedure.

ONLY AUTHORIZED SERVICE PERSONNEL SHOULD MAKE THIS ADJUSTMENT.

The Interlock Monitor and Primary Interlock Switch act as the final safety switch protecting the user from microwave energy. The terminals between "COM" and "NC" of the Interlock Monitor must close when the door is opened. After adjusting the Interlock Monitor Switch, make sure that it is correctly connected. See Figures 1-a and 1-b throughout this procedure.

CHECK THE DOOR LATCH AND SWITCH CLOSING.

NOTE: The outer cover of the microwave oven is removed.

(1) Set the microwave oven on its side so that you can see the latch board and the switches, as shown in Figure 1-a.

(2) Close the door tightly and check gaps A and B to be sure they are no more than 1/64" (0.5 mm). See Figure 1-b for close-up view of gaps A and B (door latches). If all gaps are less than 1/64" (0.5 mm), adjustment of the latch board may not be necessary. Go to Steps 5 and 6 to check the sequence of the switches.

NOTE: To correct sequence of the Primary Interlock Switch, Secondary Interlock Switch and the Interlock Monitor Switch are very important.

If any gap is larger than 1/64" (0.5 mm), you will need to adjust the latch board-U, L. Go to step 3 and follow all steps in order.

ADJUST THE LATCH AND SWITCH CLOSING

(3) Loosen the two screws holding the plastic latch board as shown.

(4) With the oven door closed tightly, move the latch board upward toward the top of the oven and/or away from the door latch until the gaps are less than 1/64" (0.5 mm).

Hold the latch board tightly in this position until you check the sequence of the switches in steps 5 and 6.

TEST THE LATCH AND SWITCH SEQUENCE

(5) Open the oven door slowly. Watch the door latch and the Primary Switch. Release Rod and Lever on the switches to make sure they are zero to the body of the switches in the following sequence:

- Primary Interlock Switch
- Secondary Interlock Switch
- Interlock Monitor Switch

Adjust the latch board until the switches operate in this sequence. See Steps 3 and 4.

(6) Close the oven door slowly and be sure it is tightly closed. Watch the three switches to make sure they are zero to the body of the switches in the following sequence:

- Interlock Monitor Switch
- Primary Interlock Switch
- Secondary Interlock Switch

NOTE: The Interlock Monitor Switch is an added safety check on the Primary and Secondary Interlock Switches. If the Primary and Secondary Interlock Switches allow the oven to operate with the door open, the Monitor Switch will blow the fuse.

(7) When you achieve the proper sequence of switches in Steps 5 and 6, tighten the latch board screws at that point.

TEST THE MICROWAVE ENERGY LEAKAGE

(8) Using a survey meter, make sure the microwave energy is below 5 mW/cm.sq.

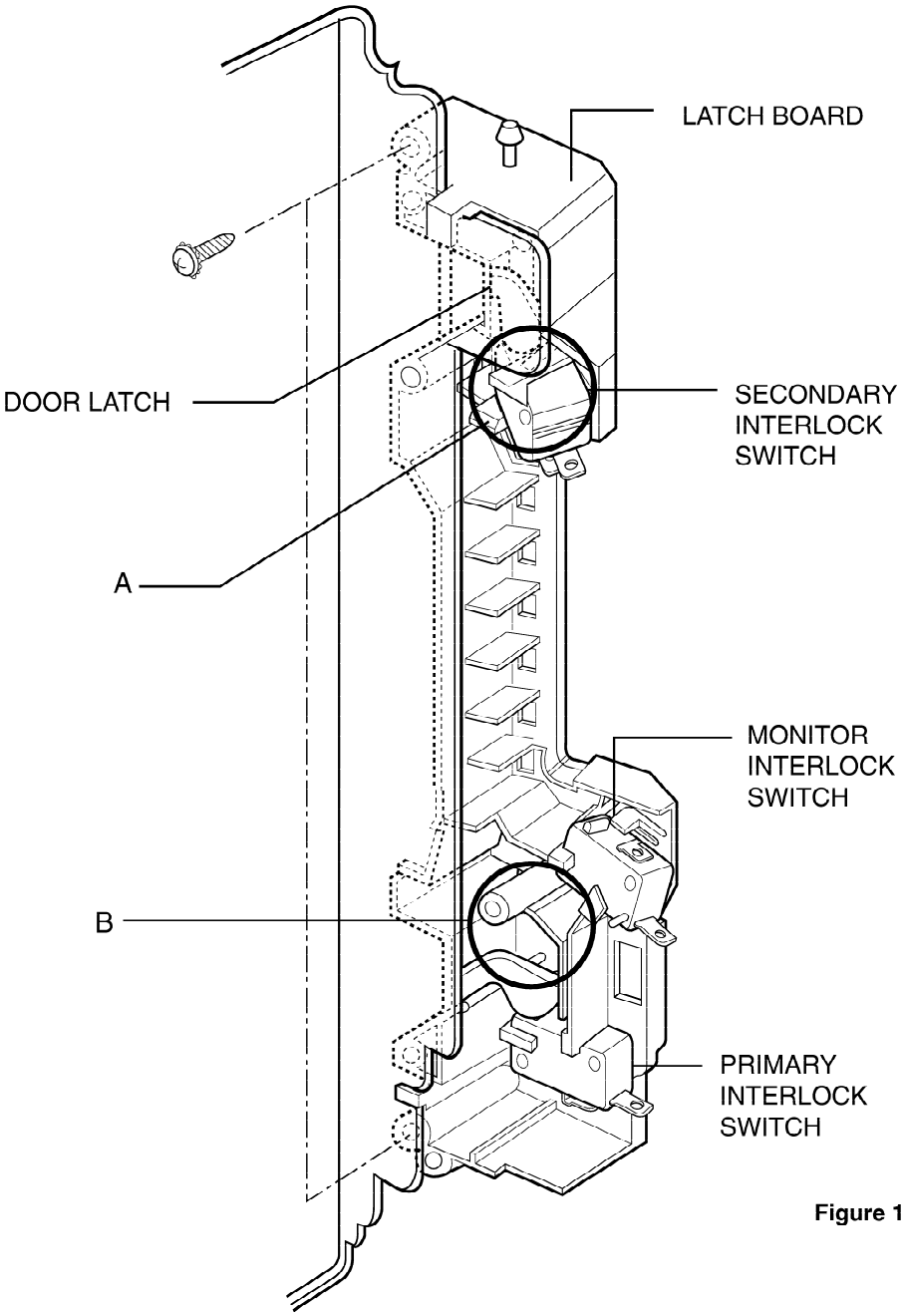

Figure 1-a

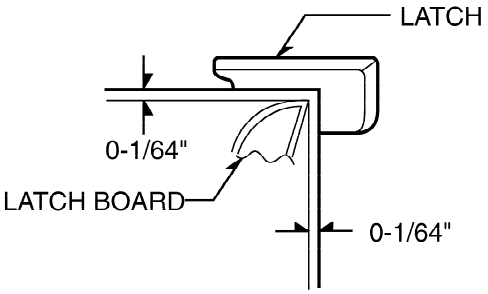

Figure 1-b

2. PRECAUTIONS ON INSTALLATION

(Figure 2)

A. Plug the power supply cord into a 120 V AC, 60 Hz, single-phase power source with a capacity of at least 20 amperes.

B. Since the unit weights about 38 lbs, be sure to place it on a sturdy and flat surface.

C. Avoid placing the unit in a location where there is direct heat or splashing water.

D. Place the unit as far away as possible from TV, radio, etc. to prevent interference.

CAUTION

This unit is equipped with a 3-pronged plug for your safety. If the wall outlet is a grounded 3-hole type, the unit will be grounded automatically.

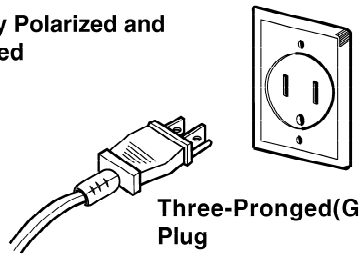

Figure 2

3. GENERAL PRECAUTIONS IN USE

A. Never operate the unit when it is empty. Operating the oven with no load may shorten the life of the magnetron. Whenever cooking dry foods (dried fish, bread, etc.) or a small amount of food, be sure to put a glass of water into the cooking compartment. The turntable tray may become hot after operating, be careful when touching it.

B. Aluminum foil should be avoided because it will disrupt cooking and may cause arcing. However, small pieces may be used to cover some parts of food to slow the cooking. Any aluminum foil used should never be closer than 2.5 cm to any side wall of the oven.

4. TRIAL OPERATION

After installation, the following sequences and results should be checked carefully.

A. Put a container filled with water (about 1 liter) into the oven, and close the door tightly.

B. Touch the STOP/CLEAR and the COOK TIME keys.

C. Set cooking time for 10 minutes by touching “1” and then “0” three times. “1000” appears in the display window.

D. Touch the START key.
Make sure the cavity light comes on. The unit will begin cooking and the display window will show the time counting down by seconds.

E. After about 5 minutes, make sure the primary interlock switch, the secondary interlock switch and the interlock monitor and oven lamp switch operate properly by opening and closing the door several times. Touch the START key each time the door is closed.

F. Continue operating the unit. Four long beep sound signal is heard when the time is up. The unit will shut off automatically.

G. Confirm the water is hot.

H. Finally, measure the output power according to “POWER OUTPUT MEASUREMENT” on page 13.

5. FEATURES AND SPECIFICATIONS

A. The safety systems incorporated in this model are:
(1) Primary interlock switch
(2) Secondary interlock switch
(3) Interlock monitor switch
(4) Choke system
(5) Magnetron thermostat
(6) Oven cavity thermostat
(Note: This thermostat located on the oven cavity will open and stop the unit from operation only if a high temperature is reached, such as, a fire created by overcooking food.)

B. Any one of 10 power output levels ranging 100W to 1000W can be selected by the touch control and electronic computer system.

C. Cooking time can be displayed on the digital readout.

D. Three different cooking stages can be set. The oven remembers three cooking stages and changes from one cooking stage to another. This is made possible with the memory function of the microprocessor.

SPECIFICATIONS

Rated Power Consumption	1400W maximum
Output	1000W maximum (*IEC 60705 Rating standard) Adjustable 100W through 1000W, 10 steps
Frequency	2450 MHz ± 50 MHz
Power Supply	120V ±12V AC, 60Hz
Rated Current	12.5 Amp.
Magnetron Cooling	Forced Air Cooling
Microwave Stirring	Turntable
Rectification	Rectification Voltage Doubler Half-Wave
Door Sealing	Choke System
Safety Devices	Thermostat: Open at 90°C ± 5°C Close at 75°C ± 5°C Fuse (20A) Primary Interlock Switch Secondary Interlock Switch Interlock Monitor
Magnetron	2M246 - 050GF
High Voltage Capacitor	Capacitor: 0.95µF, 2.1KV Ac
High Voltage Diode	350mA, 9.0KV
Cavity Lamp	125V, 20W
Timer	Digital, up to 99 mm. 99 sec. (in each cooking stage)
Tray	Tempered Safety Glass
Overall Dimensions	19 13/16"(W) x 11 1/4"(H) x 16 3/4"(D)
Oven Cavity Size	14 1/16"(W) x 8 7/8"(H) x 13 1/4"(D)
Effective Capacity of Oven Cavity	1.0 Cu.ft.
Accessories	Use and Care Manual, Turntable, Rotating Ring Assembly.

SWITCH CHART

SWITCH MODE	PRIMARY INTERLOCK SWITCH	SECONDARY INTERLOCK SWITCH	INTERLOCK MONITOR SWITCH
CONDITIONS	COM NO	COM NO	COM NC
DOOR OPEN	∞	∞	0
DOOR CLOSED	0	0	∞

NOTE: Use the above switch chart with circuit diagram on page 7.

6. OVERALL CIRCUIT DIAGRAM
A. SCHEMATIC DIAGRAM

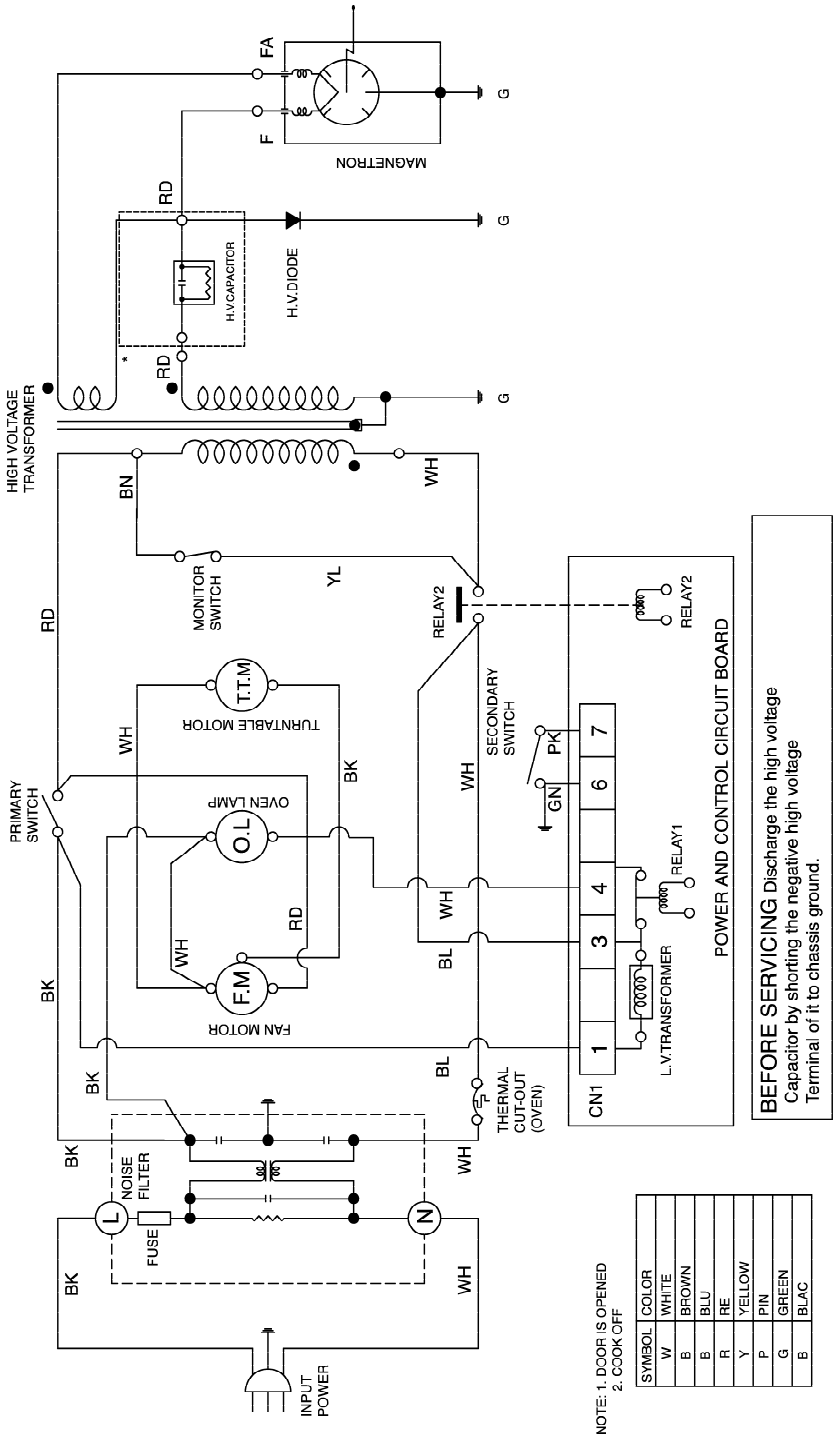

B. MATRIX CIRCUIT FOR TOUCH KEY BOARD

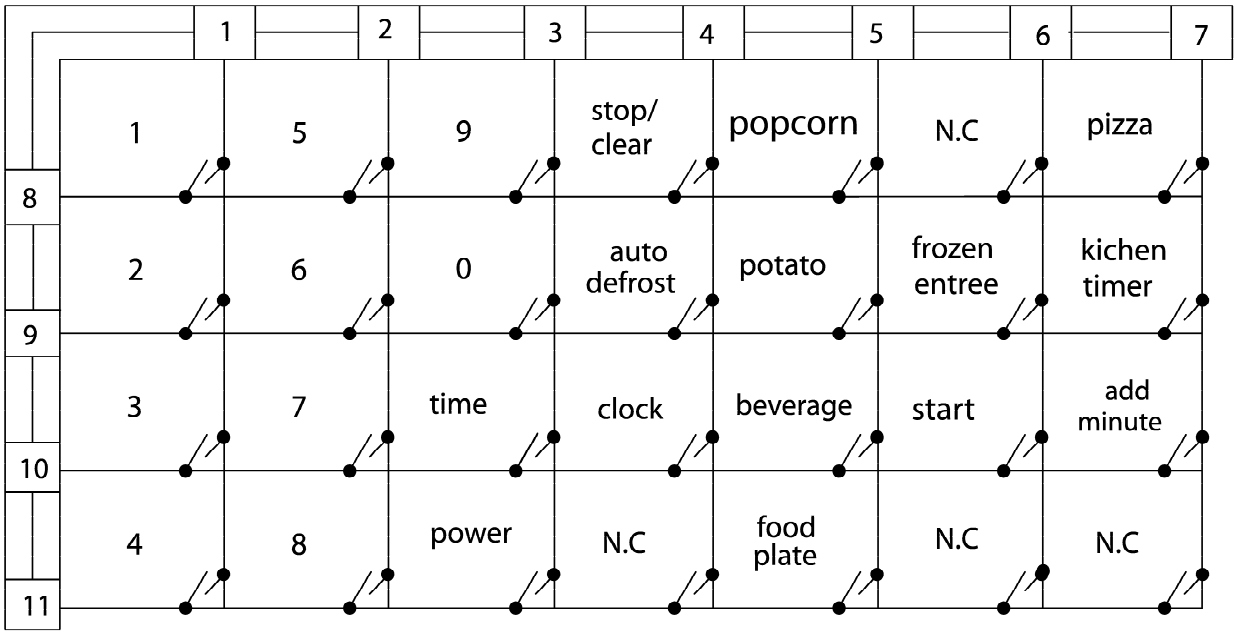

Figure 4

7. OPERATING PROCEDURES
A. OVEN CONTROL PANEL

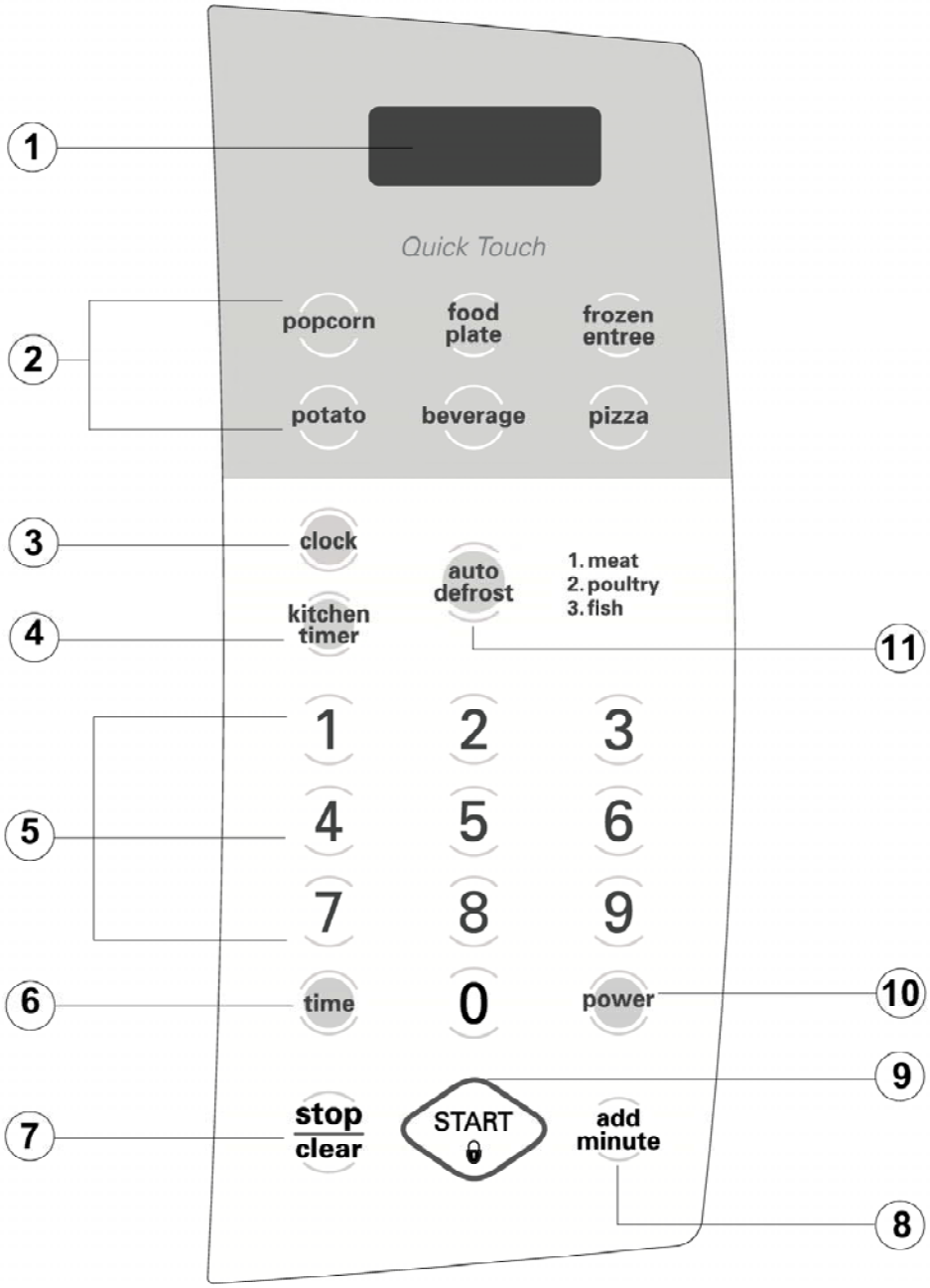

Figure 5

NOTE: A "beep" sounds when you touch a "key" on the control panel, to indicate that you have entered a setting.

B. PANEL INSTRUCTIONS

The entire operation is done by simple touch control pads.

1. **DISPLAY.** The Display includes a clock and indicators that tell you time of day, cooking time settings, and cooking functions selected.
2. **QUICK TOUCH.** This pad allows you to cook most of your favorite foods without having to select cooking times and power levels.
3. **CLOCK.** Touch this pad to enter the time of day.
4. **KITCHEN TIMER.** Touch this pad to use your microwave oven as a kitchen timer.
5. **NUMBER PADS.** Touch Number Pads to enter cooking time, power level, quantities, or weights.
6. **TIME.** Touch this pad to set a cooking time.
7. **STOP/CLEAR.** Touch this pad to stop the oven or clear entries.
8. **ADD MINUTE.** Touch this pad to cook at 100% cook power for 1 minute to 99 minute 59 seconds.
9. **START.** Touch this pad to start all entries (except the Quick Touch, Auto Defrost, Auto Cook and Add Minute function which start automatically) and to turn Child Lock on or off.
10. **POWER.** Touch this pad to set a cooking power.
11. **AUTO DEFROST.** This pad is an accurate defrosting method for frozen meat, poultry and fish up to 6.0 lbs or 4.0 kgs.

C. EASY USE CHART

(1) CLOCK
1. Touch STOP/CLEAR.
2. Touch CLOCK.
3. Touch numbers for correct time of day.
4. Touch START.

(2) KITCHEN TIMER
1. Touch STOP/CLEAR.
2. Touch KITCHEN TIMER.
3. Touch correct numbers for time.
4. Touch START.

(3) CHILD LOCK
To set:
1. Touch STOP/CLEAR.
2. Touch “START” more than 4 seconds.

To cancel:
1. Touch STOP/CLEAR.
2. Touch “START” more than 4 seconds.

(4) ADD MINUTE
1. Touch STOP/CLEAR.
2. Touch ADD MINUTE.

(5) TIMED COOKING
1. Touch STOP/CLEAR.
2. Touch COOK TIME.
3. Touch numbers for cooking time.
4. Touch POWER.
5. Touch number for cooking power level.
6. Touch START.

(6) MULTI-STAGE COOKING
1. Touch STOP/CLEAR.
2. Touch COOK TIME.
3. Touch numbers for cooking time.
4. Touch POWER.
5. Touch number for cooking power level.
6. Repeat steps 2-5 to set 2nd cooking stage.
7. Touch START.

(7) QUICK TOUCH SENSOR COOKING
1. Touch STOP/CLEAR.
2. Touch POPCORN.

(8) AUTO DEFROST
1. Touch STOP/CLEAR.
2. Touch AUTO DEFROST.
   Three different defrosting levels are provided.
   (MEAT, POULTRY, FISH)
3. Enter the weight of your food in decimal increments from 0.1 to 6.0 pounds.
4. Touch START
5. At beeping, turn food over by following the instructions in the manual.
6. After turning food over, touch START to resume defrosting.

8. PROCEDURE FOR MEASURING MICROWAVE ENERGY LEAKAGE

A. CAUTIONS

(1) Be sure to check a microwave emission prior to servicing the oven if the oven is operative prior to servicing.

(2) The service personnel should inform the manufacturer, importer, or assembler of any certified oven unit found to have a microwave emission level in excess of 5mW/cm.sq. and should repair any unit found to have excessive emission levels at no cost to the owner and should ascertain the cause of the excessive leakage. The service personnel should instruct the owner not to use the unit until the oven has been brought into compliance.

(3) If the oven operates with the door open, the service personnel should;
- Tell the user not to operate the oven
- Contact the manufacturer and CDRH (Center for Devices and Radiological Health) immediately.

NOTE: Address on CDRH
Office of Compliance (HFZ-312)
Center for Devices and Radiological Health
1390 Piccard Drive
Rockville, Maryland 20850

(4) The service personnel should check all surface and vent openings for microwave emission testing.

(5) Check for microwave energy leakage after every servicing. The power density of the microwave radiation leakage emitted by the microwave oven should not exceed 1mW/cm^2.sq. And always start measuring of an unknown field to assure safety for operating personnel from radiation leakage.

NOTE: The standard is 5mW/cm^2.sq. while in the customer's home. 1mW/cm^2.sq. stated here is manufacturer's own voluntary standard for units in customer's home.

EQUIPMENT

- Electromagnetic energy leakage monitor (NARDA 8100B, HOLADAY HI 1501)
- 600cc glass beaker
- Glass thermometer 100°C

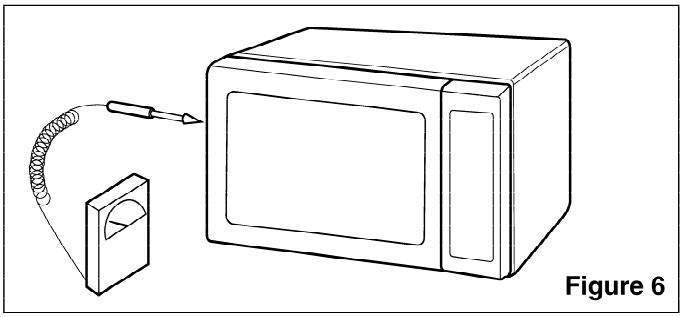

Figure 6

B. MEASURING MICROWAVE ENERGY LEAKAGE

(1) Pour 275±15cc of 20±5°C water in a beaker which is graduated to 600 cc, and place the beaker in the center of the oven.

(2) Set the energy leakage monitor to 2,450 MHz and use it following the manufacturer's recommended test procedure to assure correct result.

(3) When measuring the leakage, always use the 2 inch (5cm) spacer supplied with the probe.

(4) Operate the oven at its maximum output.

(5) Measure the microwave radiation using and electromagnetic radiation monitor by holding the probe perpendicular to the surface being measured. (See Figure 7)

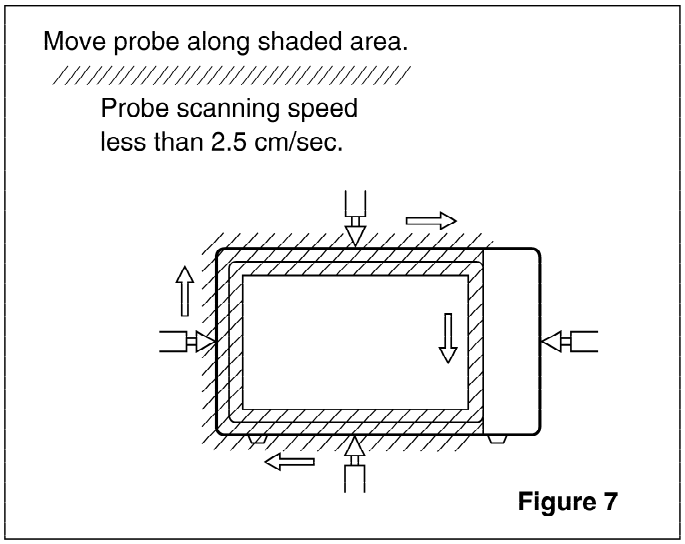

Figure 7

C. MEASUREMENT WITH THE OUTER CASE REMOVED

(1) When you replace the magnetron, measure for microwave energy leakage before the outer case is installed and after all necessary components are replaced or adjusted. Special care should be taken in measuring the following parts.
- Around the magnetron
- The waveguide

WARNING: AVOID CONTACTING ANY HIGH VOLTAGE PARTS.

D. MEASUREMENT WITH A FULLY ASSEMBLED OVEN

(1) After all components, including the outer panels, are fully assembled, measure for microwave energy leakage around the door viewing window, the exhaust opening and air inlet openings.

(2) Microwave energy leakage must not exceed the values prescribed below.

NOTES:

Leakage with the outer panels removed - less than 5mW/cm.sq. Leakage for a fully assembled oven (Before the latch switch (primary) is interrupted) with the door in a slightly opened position - less than 1 mW/cm^2.sq.

E. NOTE WHEN MEASURING

(1) Do not exceed meter full scale deflection.

(2) The test probe must be removed no faster than 1 inch/sec (2.5cm/sec) along the shaded area, otherwise a false reading may result.

(3) The test probe must be held with the grip portion of the handle. A false reading may result if the operator's hand is between the handle and the probe.

(4) When testing near a corner of the door, keep the probe perpendicular to the surface making sure the probe horizontally along the oven surface, this may possibly cause probe damage.

F. RECORD KEEPING AND NOTIFICATION AFTER MEASUREMENT

(1) After adjustment and repair of any microwave energy interruption or microwave energy blocking device, record the measured values for future reference. Also enter the information on the service invoice.

(2) Should the microwave energy leakage not be more than 1mW/cm^2.sq. after determining that all parts are in good condition, functioning properly and genuine replacement parts which are listed in this manual have been used.

(3) At least once a year, have the electromagnetic energy leakage monitor checked for calibration by its manufacturer.

G. POWER OUTPUT MEASUREMENT

(1) Fill the test beaker with 59°F(15 °C) ~ 75°F(24°C) 1 liter tap water.

(2) Stir the water in the beaker with thermometer (°F or °C) and measure temperature as T1.

(3) Place the beaker on the center of turntable.

(4) Set for one (1) minute and three (3) seconds and operate the oven at high power.

NOTE: The additional three (3) seconds is to allow the magnetron to begin generating power.

(5) When the heating is finished, stir the water again with thermometer and measure the temperature of water as T2.

(6) Subtract T1 from T2, this will give you the temperature rise.

(7) The microwave power output is within specification, if the temperature rise is as shown below:

	Temperature Rise	
Line Voltage	Degrees°F	Degrees°C
120 V	18.9 ~ 25.2	10.5 ~ 14
108 V	Min. 17.5	Min 9.7

(8) Power output will be influenced by line voltage of power supply. Consequently, correct power output must be measured within 120V AC ± 1 Volt while unit is operating.

SPECIAL TIP

• This oven used the button head screws.

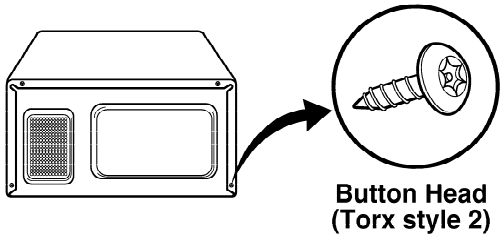

• When you remove the screws, using the tamper-resistant Torx driver have a pin-in-head.

9. DISASSEMBLY INSTRUCTIONS

IMPORTANT NOTES:

UNIT MUST BE DISCONNECTED FROM ELECTRICAL OUTLET WHEN MAKING REPAIRS, RE-PLACEMENTS, ADJUSTMENTS AND CONTINUITY CHECKS. WAIT AT LEAST ONE MINUTE, UNTIL THE HIGH VOLTAGE CAPACITOR IN THE HIGH VOLTAGE POWER SUPPLY HAS FULLY DISCHARGED. THE CAPACITOR SHOULD BE DISCHARGED BY USING INSULATED WIRE - I.E. TEST PROBE CONNECTED TO 10KOHM RESISTOR IN SERIES TO GROUND. WHEN RECONNECTING THE WIRE LEADS TO ANY PART, MAKE SURE THE WIRING CONNECTIONS AND LEAD COLORS ARE CORRECTLY MATCHED ACCORDING TO THE OVERALL CIRCUIT DIAGRAM. (ESPECIALLY SWITCHES AND HIGH VOLTAGE CIRCUIT.)

A. REMOVING OUT CASE (Figures 8)

(1) Remove three screws from the rear section.
(2) Remove one screw from the side section.
(3) Push the outer case back about 1 inch (3cm).
(4) Lift the case from the set.

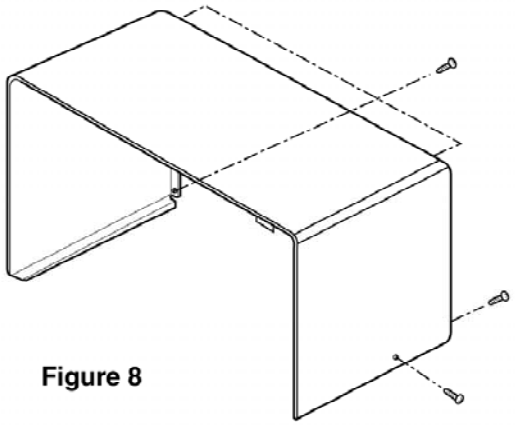

Figure 8

B. REMOVING POWER AND CONTROL CIRCUIT BOARD(Figure 9)

(1) Open the door.
(2) Remove one screw from the cavity.
(3) Disconnect the lead wire from RELAY(RY2) on the circuit board.
(4) Lift up and pull out control panel assembly carefully from the cavity.
(5) Disconnect the lead wire from connector(CN1) on the circuit board.
(6) Remove two screws, securing the circuit board.

CAUTION: DISCHARGE THE HIGH VOLTAGE CAPACITOR BEFORE SERVICING.

(7) Pull down and remove the circuit board from the control panel.
(8) Remove the F.P.C connector from the terminal socket.

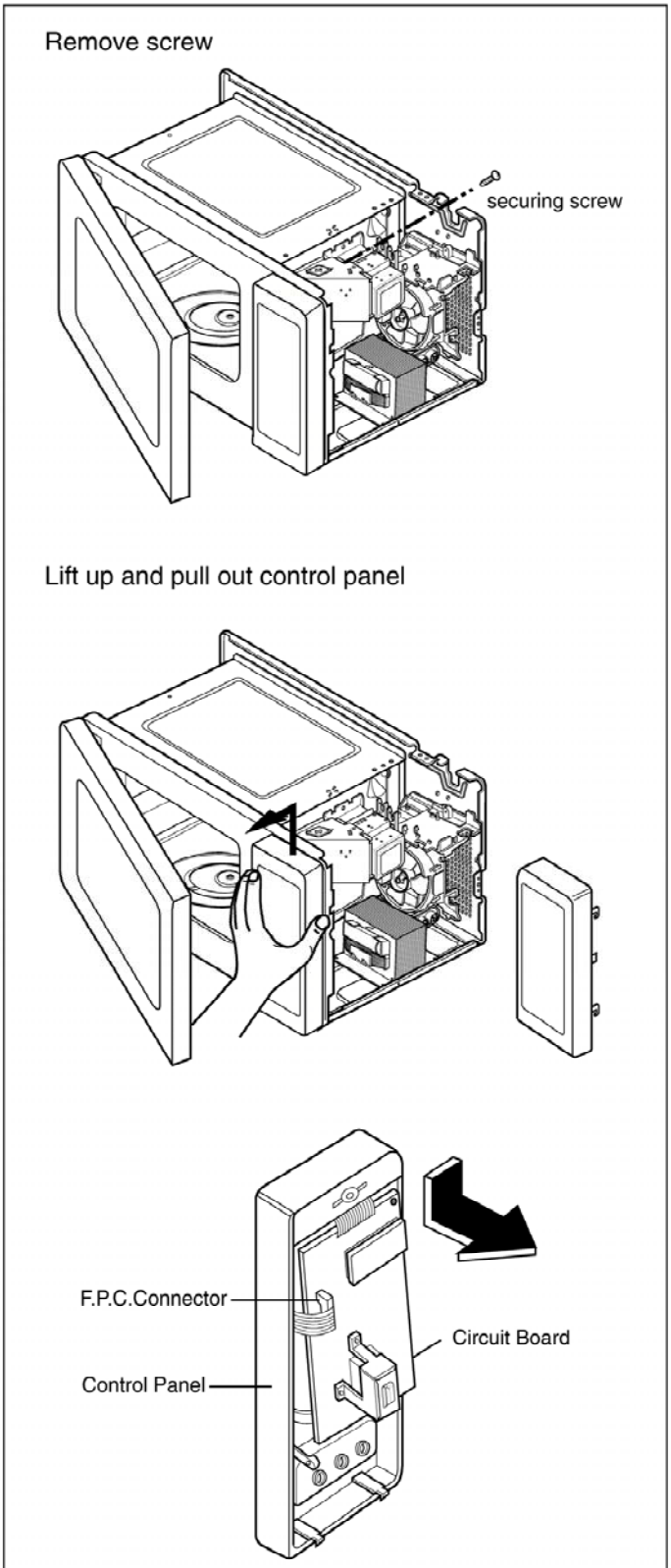

Figures 9

C. DOOR GROSS ASSEMBLY REMOVAL

(1) Open the door.

(2) Remove the choke cover cap very carefully with a flat-blade screwdriver.

CAUTION : Be careful not to damage door seal plate with the screwdriver.

(3) Lift up and pull out the door.

NOTE:

1. After replacing the door, be sure to check that the primary switch, monitor switch, and secondary switch operate normally.
2. After replacing the door, check for microwave energy leakage with a survey meter. Microwave energy must be below the limit of 5 mW/cm^2.sq. (with a 275 ml water load)
3. When mounting the door assembly to the oven assembly, be sure to adjust the door assembly parallel to the chassis. Also adjust so the door has no play between the inner door surface and oven frame assembly. If the door assembly is not mounted properly, microwaves may leak from the clearance between the door and the oven.

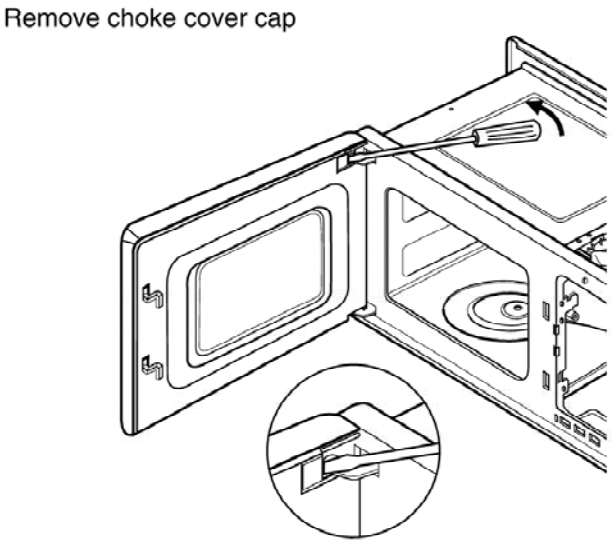

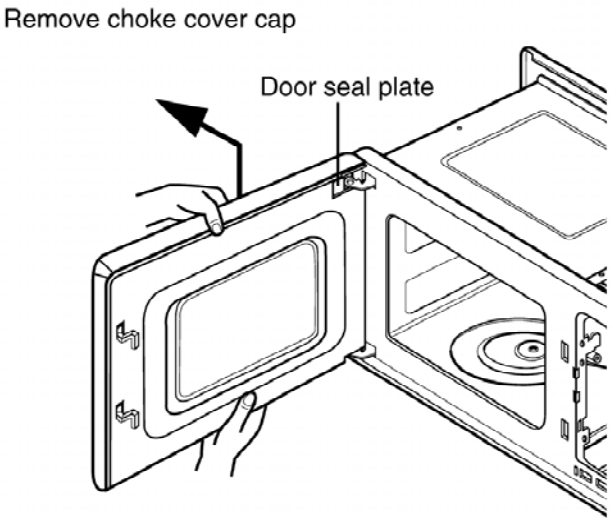

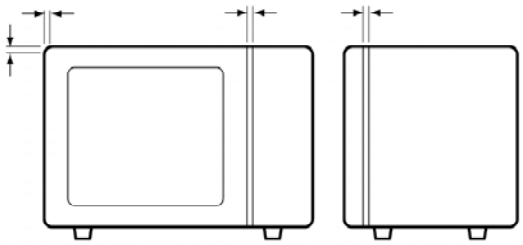

Figure 10

D. MAGNETRON REMOVAL

(1) Disconnect the wire lead from the magnetron.
(2) Carefully remove the mounting screws holding the magnetron and the waveguide.
(3) Remove the magnetron assembly until the tube is clear from the waveguide.

NOTE:

1. When removing the magnetron, make sure its dome does not hit any adjacent parts, or it may be damaged.
2. When replacing the magnetron, be sure to install the magnetron gasket in the correct position and be sure that the gasket is in good condition.
3. After replacing the magnetron, check for microwave leakage with a survey meter around the magnetron. Microwave energy must be below the limit of 5 mW/cm^2. (With a 275 ml. water load).
   Make sure that gasket is rigidly attached to the magnetron. To prevent microwave leakage, tighten the mounting screws properly, making sure there is no gap between the waveguide and the magnetron.

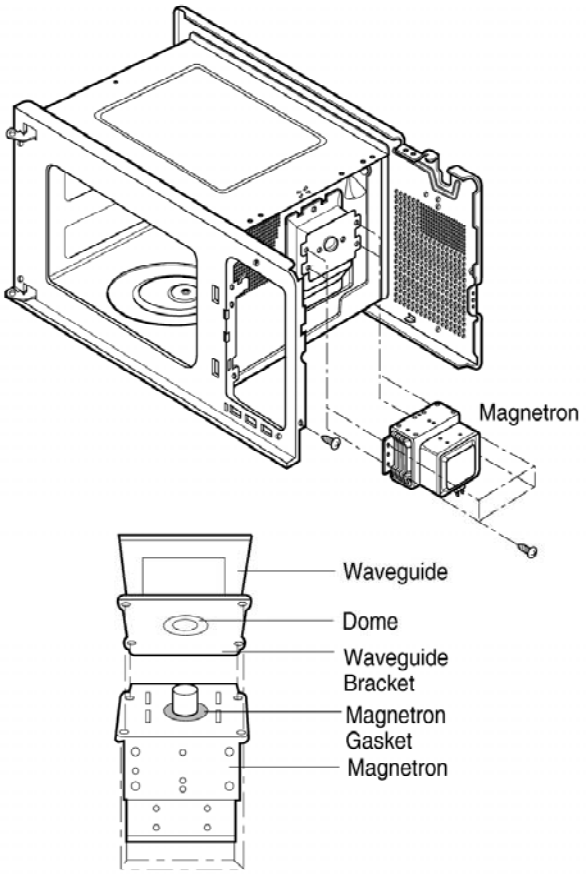

Figures 11

E. SUCTION GUIDE MAIN ASSEMBLY

NOTE: To repair any of them, the Suction Guide Main ASS'Y should be removed first.

(1) Disconnect the wire lead from the capacitor and fan motor.
(2) Remove two screws holding the Suction Guide Main ASS'Y to oven cavity.
(3) Pull out Suction Guide Main ASS'Y from the oven.

Remove screw

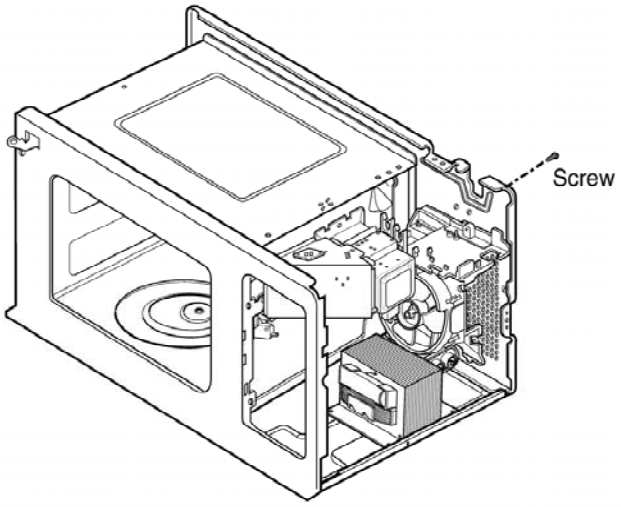

Pull out suction guide main ASS'Y

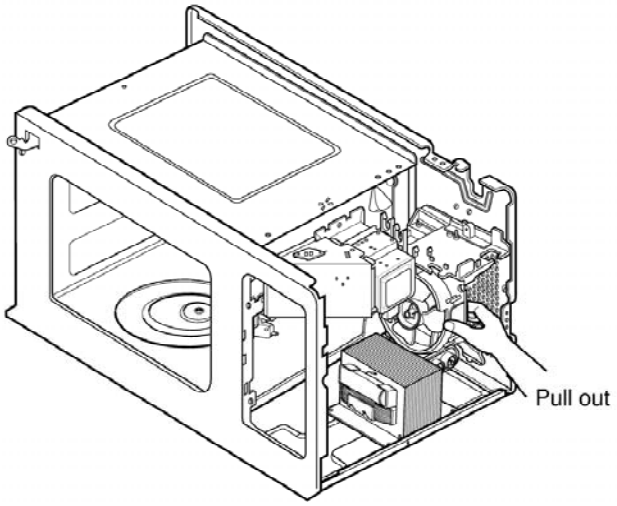

Figures 12

F. FAN MOTOR ASSEMBLY REMOVAL

NOTE: To repair any of them, the Suction Guide Main ASS'Y should be removed first.

(1) Disconnect the wire lead from the fan motor.
(2) Remove the fan.
(3) Remove the two screws holding the fan motor assembly to the suction guide ass'y.

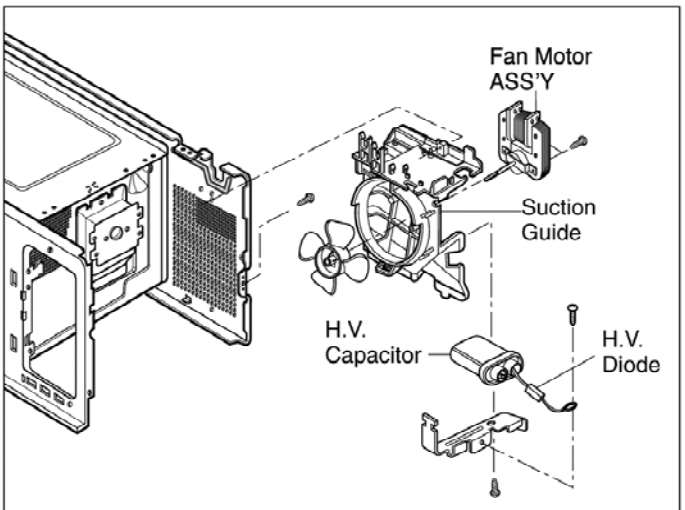

Figures 14

G. HIGH VOLTAGE TRANSFORMER REMOVAL

(1) Discharge the high voltage capacitor.
(2) Disconnect the wire lead from the magnetron, the high voltage transformer, and the capacitor.
(3) Remove the screw holding the high voltage transformer to the base-plate.

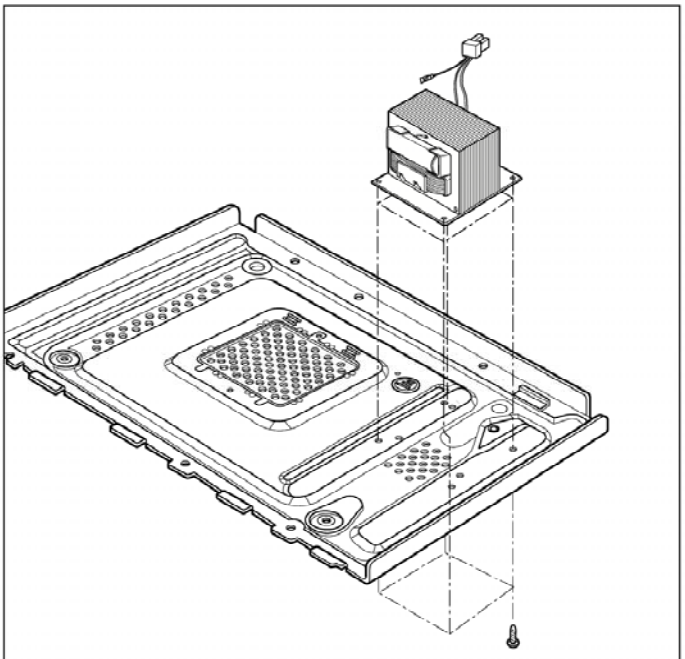

Figures 15

H. HIGH VOLTAGE CAPACITOR AND DIODE REMOVAL

(1) Discharge the high voltage capacitor.
(2) Disconnect the wire lead from the high voltage capacitor.
(3) Remove the screw holding the high voltage capacitor bracket.

I. REMOVING THE TURNTABLE MOTOR

(1) Remove the glass turntable & the rotating ring ASS'Y by hand.
(2) Remove the turntable motor cover.
The turntable base cover is easily removed by pinching the six parts with wire cutting pliers.
(3) Disconnect the wire lead from the turntable motor terminals.
(4) Remove the screw securing the turntable motor to the oven cavity assembly.
(5) After repairing the motor, rotate the removed turntable motor cover.
(6) Fit the turntable motor cover's projecting part to the base plate slit.

NOTE:

1. Remove the wire lead from the turntable motor VERY CAREFULLY.
2. Be sure to grasp the connector, not the wires, when removing.

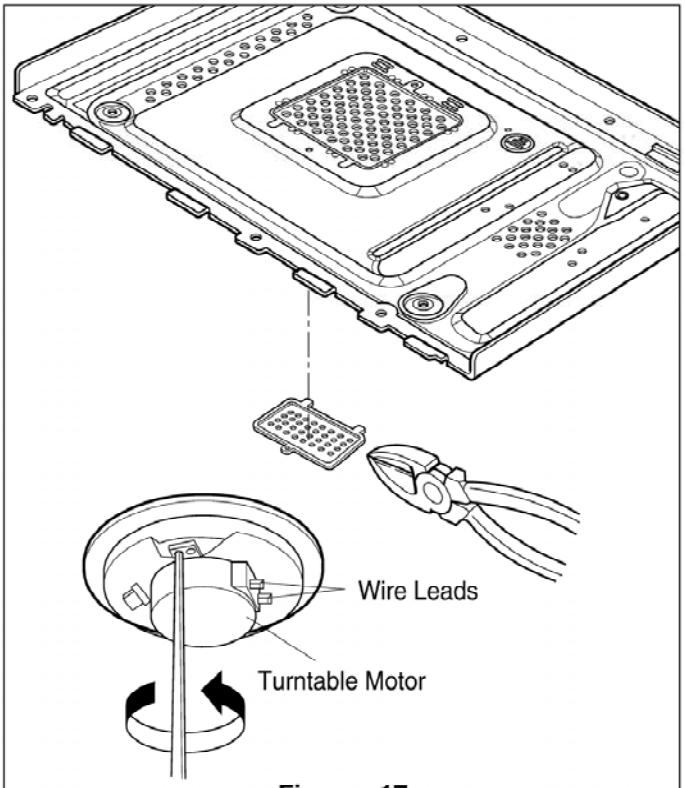

Figures 17

J. INTERLOCK SYSTEM

(1) INTERLOCK MECHANISM
The door lock mechanism is a device which has been specially designed to eliminate completely microwave activity when the door is opened during cooking and thus to prevent the danger resulting from the microwave leakage.

(2) MOUNTING OF THE PRIMARY/MONITOR/ SECONDARY SWITCHES TO THE LATCH BOARD

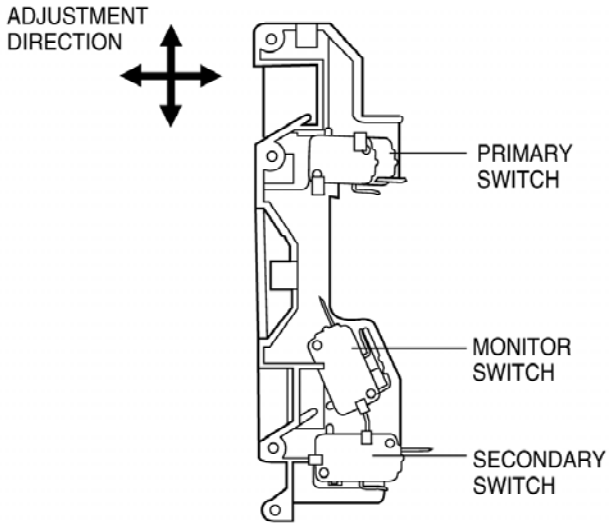

Figures 18

(3) INSTALLATION AND ADJUSTMENT OF THE LATCH BOARD TO THE OVEN ASSEMBLY

- Mount the latch board to the oven assembly.
- Adjust the latch board in the arrow direction so that oven door will not have any play in it when the door is closed.
- Tighten the mounting screw.
- **Check for play in the door by pushing the door release button. Door movement should be less than 0.5 mm. (1/64 inch)**
  Don't push the door release button while making this adjustment. Make sure that the latch moves smoothly after adjustment is completed and that the screws are tight. Make sure the primary, monitor, and secondary switches operate properly by following the continuity test procedure.

10. INTERLOCK CONTINUITY TEST

WARNING : FOR CONTINUED PROTECTION AGAINST EXCESSIVE RADIATION EMISSION, REPLACE ONLY WITH IDENTICAL REPLACEMENT PARTS.

TYPE NO. SZM-V 16-FA-63 OR VP-533A-OF FOR PRIMARY SWITCH
TYPE NO. SZM-V 16-FA-62 OR VP-532A-OF FOR MONITOR SWITCH
TYPE NO. SZM-V 16-FA-63 OR VP-533A-OF FOR SECONDARY SWITCH

A. PRIMARY INTERLOCK SWITCH TEST

When the door release button is depressed slowly with the door closed, an audible **click** should be heard at the same time or successively at intervals. When the button is released slowly, the latches should activate the switches with an audible **click.**

If the latches do not activate the switches when the door is closed, the switches should be an adjusted in accordance with the adjustment procedure. Disconnect the wire lead from the primary switch. Connect the ohmmeter leads to the common (COM) and normally open (NO) terminal of the switch. The meter should indicate an open circuit in the door open condition. When the door is closed, the meter should indicate a closed circuit.

When the primary switch operation is abnormal, make the necessary adjustment or replace the switch only with the same type of switch.

B. SECONDARY INTERLOCK SWITCH TEST

Disconnect the wire lead from the secondary switch. Connect the ohmmeter leads to the common (COM) and normally open (NO) terminals of the switch. The meter should indicate a open circuit in the door open condition. When the door is closed, meter should indicate an closed circuit. When the secondary switch operation is abnormal, make the necessary adjustment or replace the switch only with the same type of switch.

C. MONITOR SWITCH TEST

Disconnect the wire lead from the monitor switch. Connect the ohmmeter leads to the common (COM) and normally closed (NC) terminals of the switch. The meter should indicate closed circuit in the door open condition. When the door is closed, meter should indicate an open circuit. When the monitor switch operation is abnormal, replace with the same type of switch.

NOTE: After repairing the door or the interlock system, it is necessary to do this continuity test before operating the oven.

COMPONENTS	TEST PROCEDURE		RESULTS	
SWITCHES (Wire leads removed)	Check for continuity of the switch with an Ohm-meter		Door open	Door closed
	Primary Switch	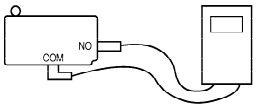	0.L	0
	Monitor Switch	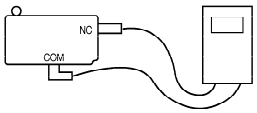	0	0.L
	Secondary Switch	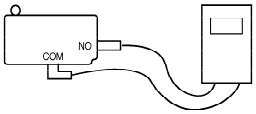	0.L	0
	NOTE : After checking for the continuity of switches, make sure that they are connected correctly.			

11. TEST AND CHECKOUT PROCEDURES, AND TROUBLESHOOTING

CAUTIONS

1. DISCONNECT THE POWER SUPPLY CORD FROM THE OUTLET WHENEVER REMOVING THE OUTER CASE FROM THE UNIT. PROCEED WITH THE TEST ONLY AFTER DISCHARGING THE HIGH VOLTAGE CAPACITOR AND REMOVING THE WIRE LEADS FROM THE PRIMARY WINDING OF THE HIGH VOLTAGE TRANSFORMER.
2. ALL OPERATIONAL CHECKS WITH MICROWAVE ENERGY MUST BE DONE WITH A LOAD (1 LITER OF WATER IN CONTAINER) IN THE OVEN.

A. TEST PROCEDURES

COMPONENTS	TEST PROCEDURE	RESULTS
HIGH VOLTAGE TRANSFORMER (Wire leads removed)	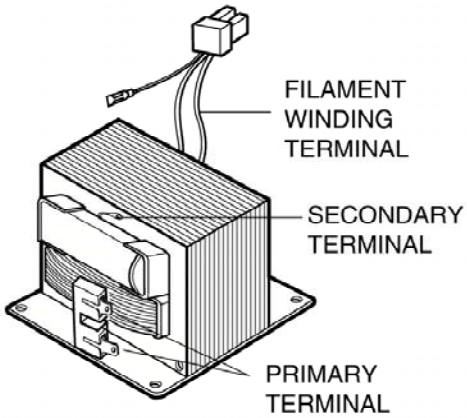 1. Measure the resistance. (Select the Ω scale on the meter) • Primary winding • Secondary winding • Filament winding 2. Measure the resistance. (Select the Ω scale on the meter) • Primary winding to ground • Filament winding to ground	 Approx.: 1.4 ohm Approx.: 90 ohm Less than: 0.1 ohm Normal: Infinite Normal: Infinite
MAGNETRON (Wire leads removed)	1. Measure the resistance. (Select the Ω scale on the meter) • Filament terminal 2. Measure the resistance. (Select the Ω scale on the meter) • Filament to chassis	Normal: Less than 1 ohm Normal: Infinite

COMPONENTS	TEST PROCEDURE	RESULTS
	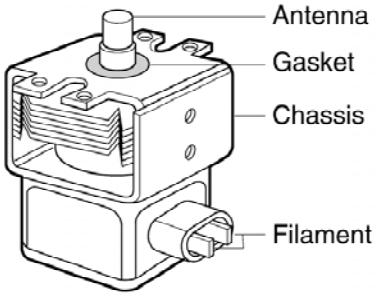 NOTE: When testing the magnetron, be sure to install the magnetron gasket in the correct position and be sure that the gasket is in good condition.	
HIGH VOLTAGE CAPACITOR 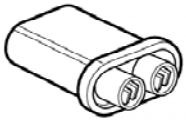	1. Check DC 9V battery before performing tests. 2. Select the DCV scale on the meter. 3. Using the meter, battery, and jump wire, connect the items as illustrated in figures. ■ Terminal to terminal 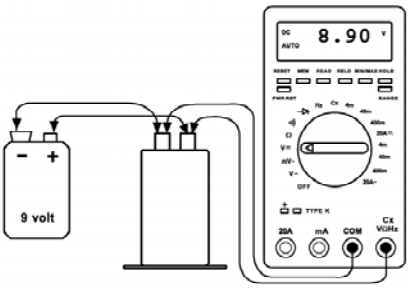 ■ Terminal to case 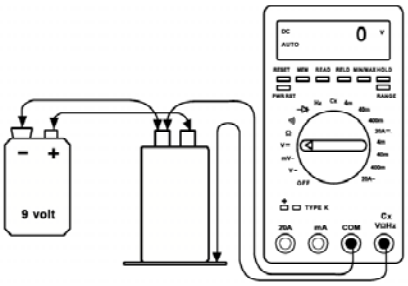	Normal: Approximately 9V Normal: Approximately 0V or a value displayed in mV Will be seen.
RELAY 2	Check for continuity of relay 2 with an ohm-meter. (Remove wire leads from relay 2 and operate the unit.) 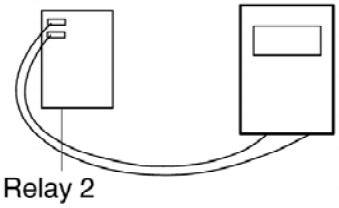	

POWER LEVEL	0	0.L
1	4 sec	18 sec
2	6 sec	16 sec
3	8 sec	14 sec
4	10 sec	12 sec
5	12 sec	10 sec
6	14 sec	8 sec
7	16 sec	6 sec
8	18 sec	4 sec
9	20 sec	2 sec
10	22 sec	0 sec

COMPONENTS	TEST PROCEDURE	RESULTS
H.V.Diode (RECTIFIER) 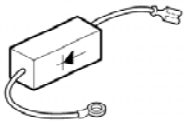	***STEP 1. Test the diode to see if it is shorted.*** Procedure: 1. Select the Ω scale on the meter. 2. Place the meter leads across the diode as pictured in Figure 1. The reading should be "40M Ω," "OL," or a reading of infinity. 3. Reverse the meter leads. The reading should again indicate a reading of infinity. If the diode shows "infinity" in BOTH directions, it is NOT shorted. 4. If the diode is not shorted, proceed to step 2.	
	STEP 2. Test the diode for forward biasing. Procedure: 1. Select the DCV scale on the meter. 2. Using the meter, battery and jumper wire, connect the items as illustrated in Figure 2. This has the positive side of the battery connected to the cathode of the diode. 3. The diode should be forward biased therefore a voltage reading of approximately 4.7 VDC to 6.4 VDC will be read depending on meter, battery strength, etc. (Note: If the meter leads were reversed, a negative voltage of the same amount would be seen.)	Normal: Approximately 4 .7-6.4V
	STEP 3. Test the diode for reverse biasing. Procedure: 1. Using the same scale on the meter, connect the positive side of the battery to the anode of the diode as illustrated in Figure 3. 2. The diode should be reverse biased therefore a reading of 0 volt or a value displayed in mV will be seen. (The display will be erratic changing values rapidly in the mV scale.)	Normal: Approximately 0V
	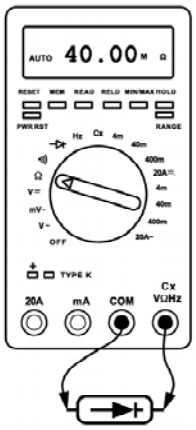 **Figure 1** 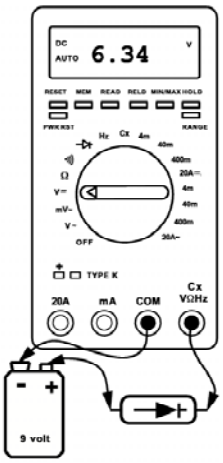 **Figure 2** 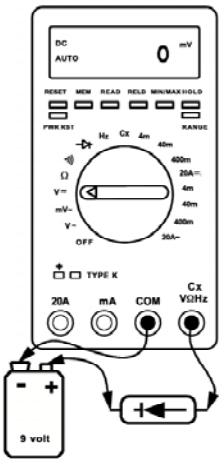 **Figure 3**	

COMPONENTS	TEST PROCEDURE	RESULTS
FAN MOTOR (Wire leads removed)	Measure the resistance. (Select the Ω scale on the meter) 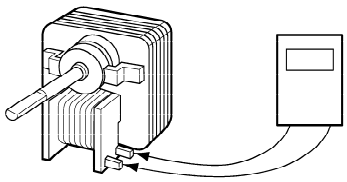	Normal: Approx. 65 ~ 80 ohm Abnormal: Infinite or several ohm.
TURNTABLE MOTOR (Wire leads removed)	Measure the resistance. (Select the Ω scale on the meter) 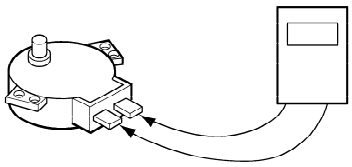	Normal: Approx. 2 ~ 4K ohm Abnormal: Infinite or several ohm.

NOTE : • A MICROWAVE LEAKAGE TEST MUST ALWAYS BE PERFORMED WHEN THE UNIT IS SERVICED FOR ANY REASON.
• MAKE SURE THE WIRE LEADS ARE IN THE CORRECT POSITION.
• WHEN REMOVING THE WIRE LEADS FROM THE PARTS, BE SURE TO GRASP THE CONNECTOR, NOT THE WIRES.

B. CHECKOUT PROCEDURES

(1) CHECKOUT PROCEDURES FOR FUSE BLOWING

CAUTION: REPLACE BLOWN FUSE WITH 20 AMPERE FUSE.

PROBLEMS	CAUSES
Fuse blows immediately after the door is closed.	Improper operation of the primary, secondary interlock switches and/or the interlock monitor switch.
Fuse blows immediately after the door is opened.	
Fuse blows when the door is closed and START key is touched.	Malfunction of the high voltage transformer; the high voltage capacitor including the diode, the magnetron, the blower motor or the circuit board.

NOTES:

- If the fuse is blown by an improper switch operation, replace the defective switches and the fuse at the same time. After replacing the defective switches with new ones, make sure that they are correctly connected.
- Check for microwave energy leakage according to “1. ADJUSTMENT PROCEDURES” on page 3, when the primary, secondary interlock switches and/or the interlock monitor switch are adjusted or replaced.

(2) CHECKOUT PROCEDURES FOR RELAY

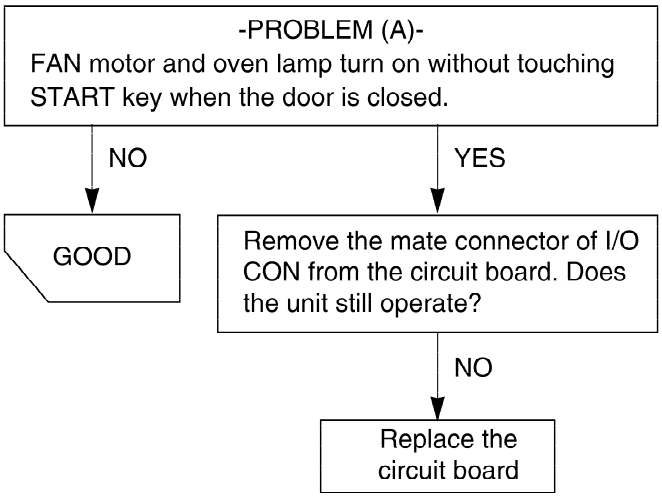

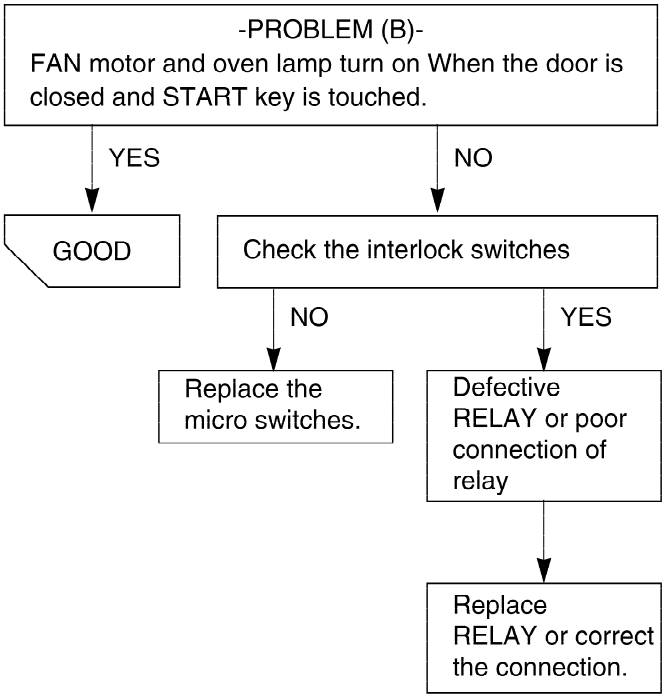

(3) CHECKOUT PROCEDURES FOR CIRCUIT BOARD

The following symptoms indicate a defective circuit board.

(1) The start function fails to operate but the high voltage Systems, the interlock switches, the door sensing and the relay check good.
(2) The unit with a normal relay continuously operates.
(3) The buzzer does not sound or continues to sound.
(4) Some segments of one or more digits do not light up, or they continue to light up, or segments light when they should not.
(5) Wrong figures appear.
(6) The figures of all digits flicker.
(7) Some of the indicators do no light up.
(8) The clock does not keep time properly.

NOTE: A MICROWAVE ENERGY LEAKAGE TEST MUST ALWAYS BE PERFORMED WHEN THE UNIT IS SERVICED FOR ANY REASON.

C. TROUBLE SHOOTING

WHEN YOU GET A COMPLAINT FROM YOUR CUSTOMER, EVALUATE THE COMPLAINT CAREFULLY. IF THE FOLLOWING SYMPTOMS APPLY, PLEASE INSTRUCT THE CUSTOMER IN THE PROPER USE OF THE MICROWAVE OVEN. THIS CAN ELIMINATE AN UNNECESSARY SERVICE CALL.

CAUTIONS

1. Check grounding before checking for trouble.
2. Be careful of the high voltage circuit.
3. Discharge the high voltage capacitor.
4. When checking the continuity of the switches or the high voltage transformer, disconnect one lead wire from these parts and then check continuity with the AC plug removed. Otherwise it may result in a false reading or damage to your meter.
5. Do not touch any part of the circuit on the PCB since static electric discharge may damage this control panel. Always touch yourself to ground while working on this panel to discharge any static charge built up in your body. (Micom model only)

CONDITION	CAUSE	REMEDY
Microwave oven does not work.	Inserting many plugs into one outlet and using them at the same time. (blown fuse or breaker)	Avoid using other electrical appliances when you use the microwave oven.
	Microwave oven plug is not inserted tightly.	Insert microwave oven plug securely.
Output power is too low.	Low AC input voltage.	Use the microwave oven at adequate line voltage.
	Food temperature is too low.	This may not be a defect. It is possible that the food should be cooked for a longer time period.
Sparks occur.	Using metallic ware and allowing it to touch the oven wall.	Do not use metallic ware for cooking except that noted in the cooking guide.
	Ceramic ware trimmed in gold or silver powder is used.	Do not use any type of cookware with metallic trimming.
Uneven cooking.	Inconsistent intensity of microwave by their characteristics.	1. Use plastic wrap or lid. 2. Stir once or twice while cooking soup, cocoa or milk, etc.

(TROUBLE 1) The following visual conditions indicate a probable defective control circuit.

1. Incomplete segments.
   - Segment missing.
   - Partial segment missing.
   - Digit flickering (NOTE: Slight flickering is normal.)
2. Colon does not turn on or blink.
3. A distinct change in the brightness of one or more numbers in display.
4. One or more digits in the display are not lighting.
5. Display indicates a number different from one touched, for example, key in **5** and **3** appears in the display.
6. Specific numbers (for example 7 or 9) will not display when key pad is touched.
7. Display does not count down with time blinking or up with clock operation.
8. Display obviously jumps in time while counting down.
9. Display counts down too fast while cooking.
10. Each indicator light does not turn on after setting cooking cycle.
11. Display time of day does not reappear when cooking is finished.

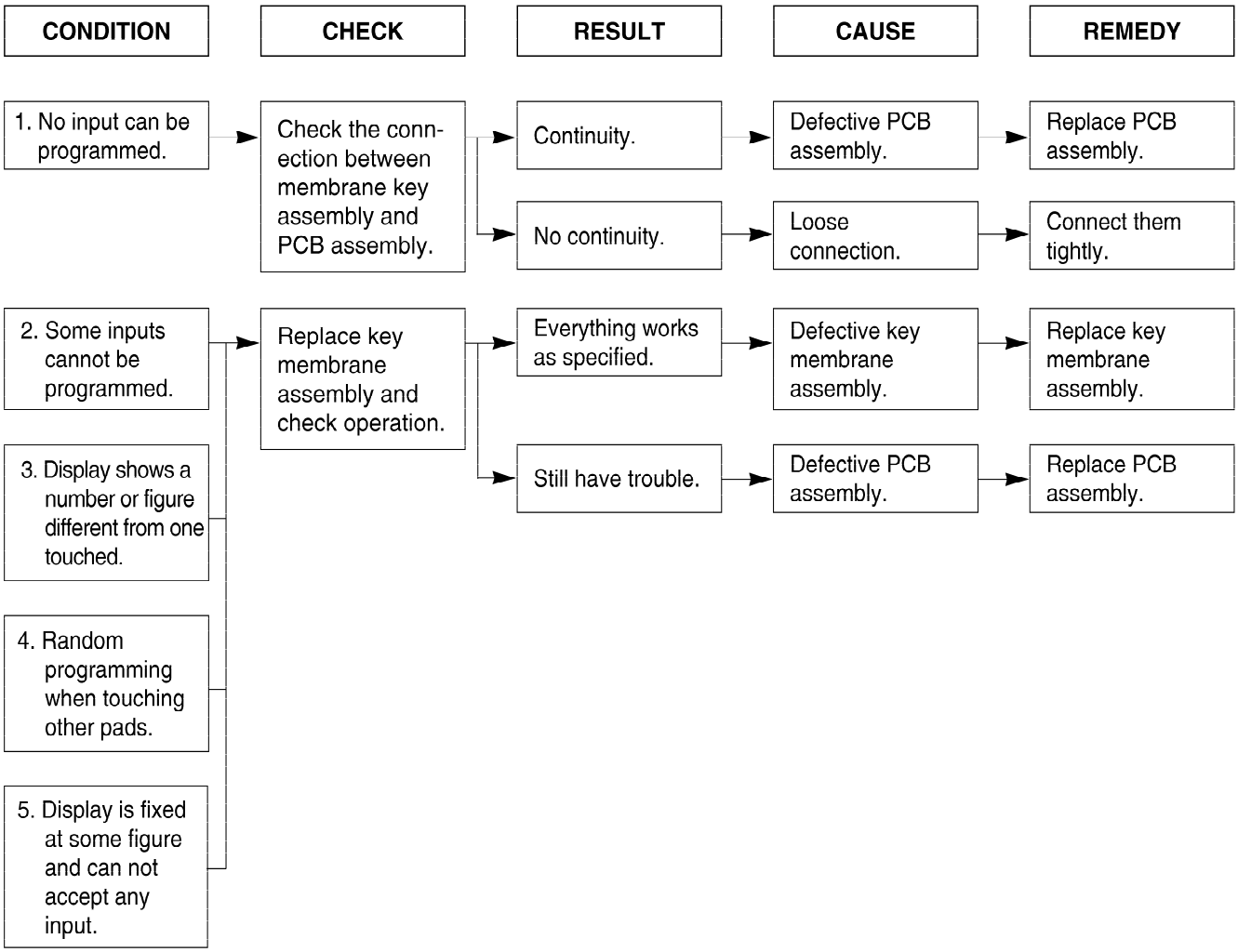

(TROUBLE 2) Oven does not operate at all and Display window does not display any figures and no input is accepted.

CONDITION	CHECK	RESULT	CAUSE	REMEDY
1. Fuse blows.	Check continuity of monitor switch (with door closed).	Continuity.	Malfunction of the monitor switch.	**Replace fuse, primary, monitor switches, and RELAY(RY2) of P.C.B Assembly.**
		No continuity.		
	Replace fuse			
	Check continuity of primary switch (with door opened).	Continuity.	Shorted contact at the primary switch.	**Replace fuse, primary, monitor switches, and RELAY(RY2) of P.C.B Assembly.**
		No continuity.		
	Disconnect one side of the wire lead connected from transformer to the high voltage capacitor and operate the unit.	Normal.	Defective high voltage capacitor.	Replace high voltage capacitor.
		Fuse blows again	Defective high voltage transformer.	Replace high voltage transformer.
2. Fuse does not blow.	Check continuity of thermostat.	No continuity.	Defective thermostat.	Replace thermostat.
		Continuity.		
	Check continuity of power supply cord.	No continuity.	Defective power supply cord.	Replace power supply cord.

(TROUBLE 3) Display shows all figures set, but oven does not start cooking while desired program times are set and START pad is touched.

CONDITION	CHECK	RESULT	CAUSE	REMEDY
1.Setting time does not count down when touching START pad.	Check continuity of secondary switch (with door closed).	No continuity.	Defective secondary switch.	Replace secondary switch.
		Continuity.		
	Check the connection between CN1 connector and PCB assembly.	Continuity.	Defective PCB assembly.	Replace PCB assembly.
		No continuity.	Loose connection.	Connect them tightly.
2. Fan motor or oven lamp do not turn on.	Check fan motor.	Abnormal.	Defective fan motor.	Replace fan motor.
	Check oven lamp.	Abnormal.	Defective oven lamp.	Replace oven lamp.
		Normal.		

(TROUBLE 4) Oven seems to be operating but little heat is produced in oven load.

CONDITION	CHECK	RESULT	CAUSE	REMEDY
Output is low.	Check the power source voltage.	Lower than 90% of rating voltage.	Decrease in power source voltage with load.	Suggest customer contact local electric power utility co. or qualified electrician.
		Normal.		
	Disconnect the wire leads from relay 2 and check on and off time with multitester.	Abnormal.	Defective PCB assembly.	Replace PCB assembly.
		Normal.		
	Measure the output power.	Abnormal.	Defective magnetron.	Replace magnetron.

NOTE : Simple test of power output-conducted by heating one liter water for one min. if available. Minimum 8.5°C temperature rise is normal condition.

(TROUBLE 5) No microwave oscillation even though oven lamp and fan motor run.
(Display operates properly)

CONDITION	CHECK	RESULT	CAUSE	REMEDY
No microwave oscillation.	Disconnect the wire leads from relay 2 and check continuity of relay2. (Operate the unit)	No continuity.	Defective PCB assembly.	Replace PCB assembly.
		Continuity.		
	Check high voltage transformer	Abnormal	Defective high voltage transformer.	Replace high voltage transformer.
		Normal		
	Check high voltage capacitor	Abnormal	Defective high voltage capacitor.	Replace high voltage capacitor.
		Normal		
	Check high voltage diode	Abnormal	Defective high voltage diode.	Replace high voltage diode.
		Normal		
	Check magnetron.	Abnormal	Defective magnetron.	Replace magnetron.

NOTE :
- **Make sure the wire leads correct position.**
- **When Removing the wire leads from the parts, be sure to grasp the connector, not the wires.**
- **When removing the magnetron, be sure to install the magnetron gasket in the correct position and in good condition.**

Output is full power when you set lower power level.	Disconnect the wire leads from relay 2 and check continuity relay 2. (Operate the unit)	Abnormal.	Defective PCB assembly.	Replace PCB assembly.

EXPLODED VIEW

INTRODUCTION

Model: 721.66022500
721.66029500

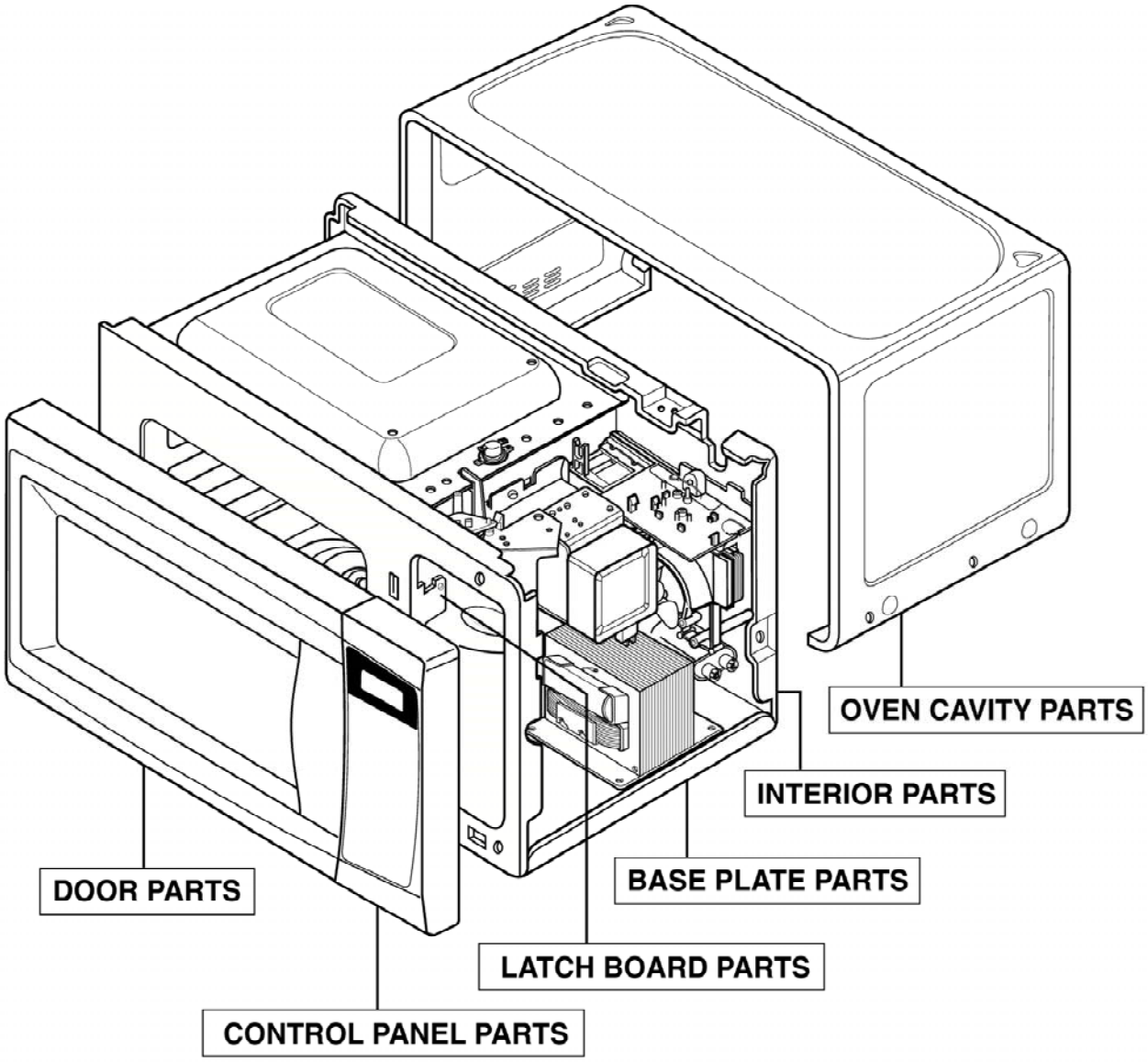

DOOR PARTS

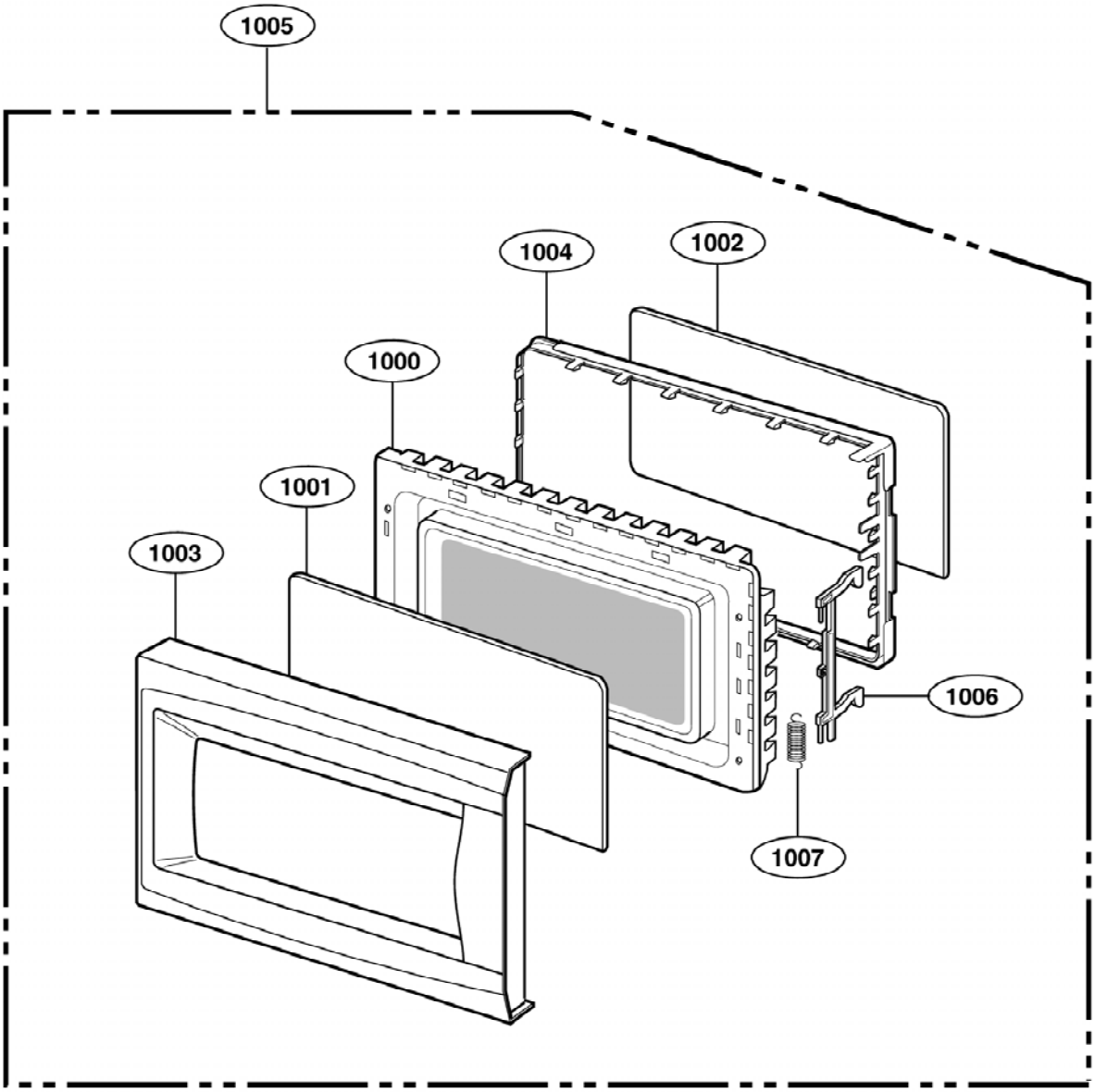

#EV#

CONTROLLER PARTS

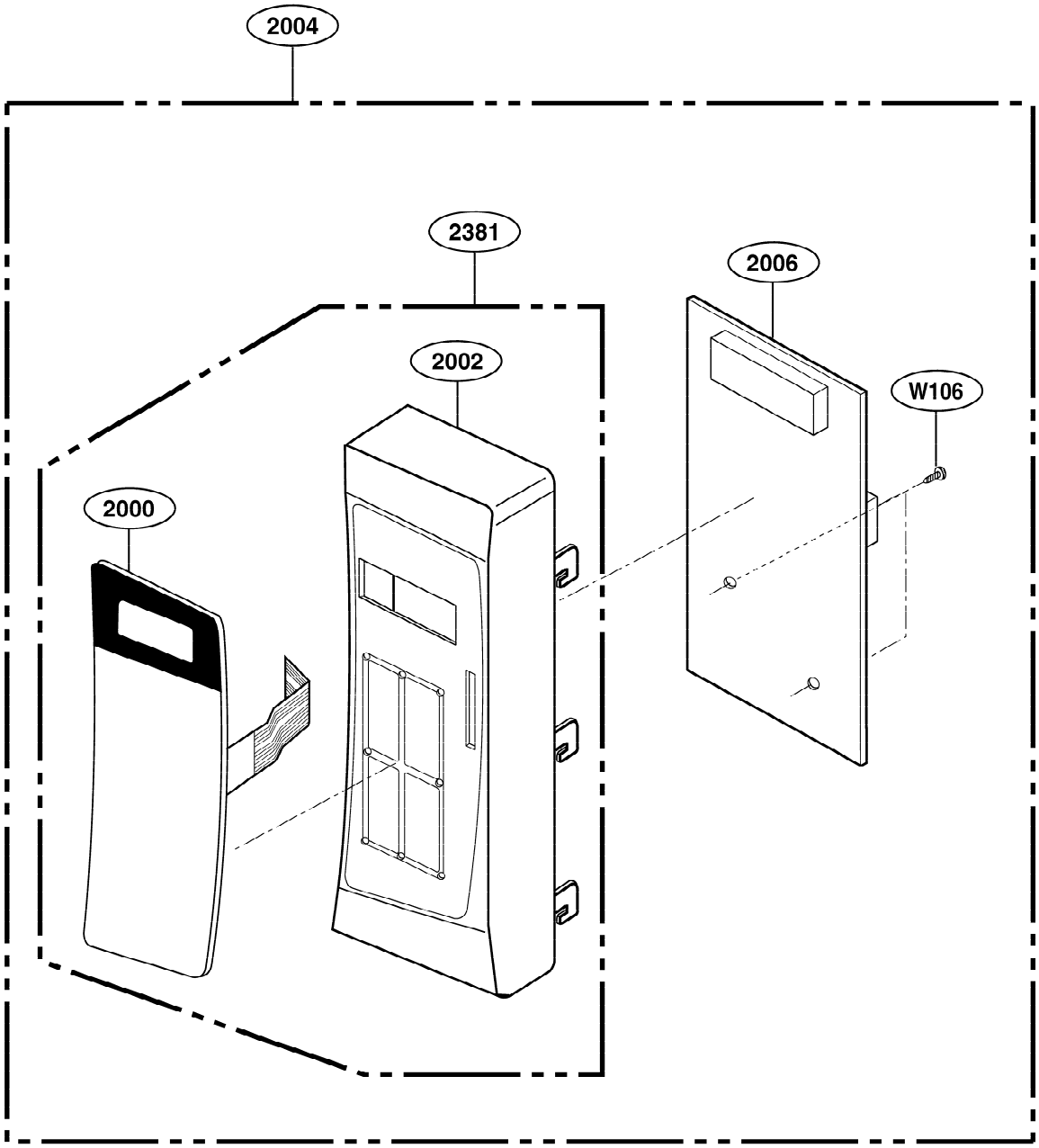

OVEN CAVITY PARTS

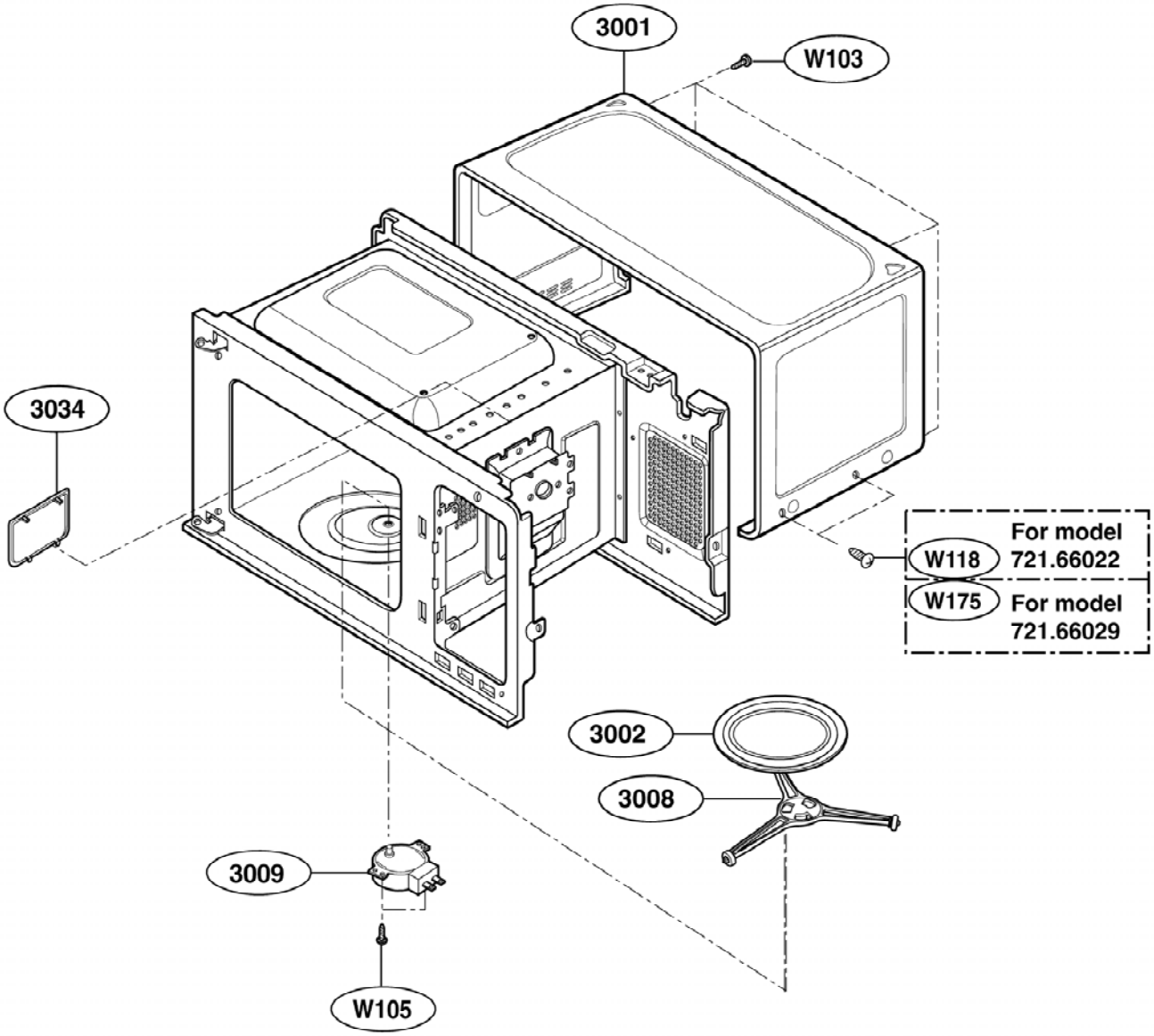

LATCH BOARD PARTS

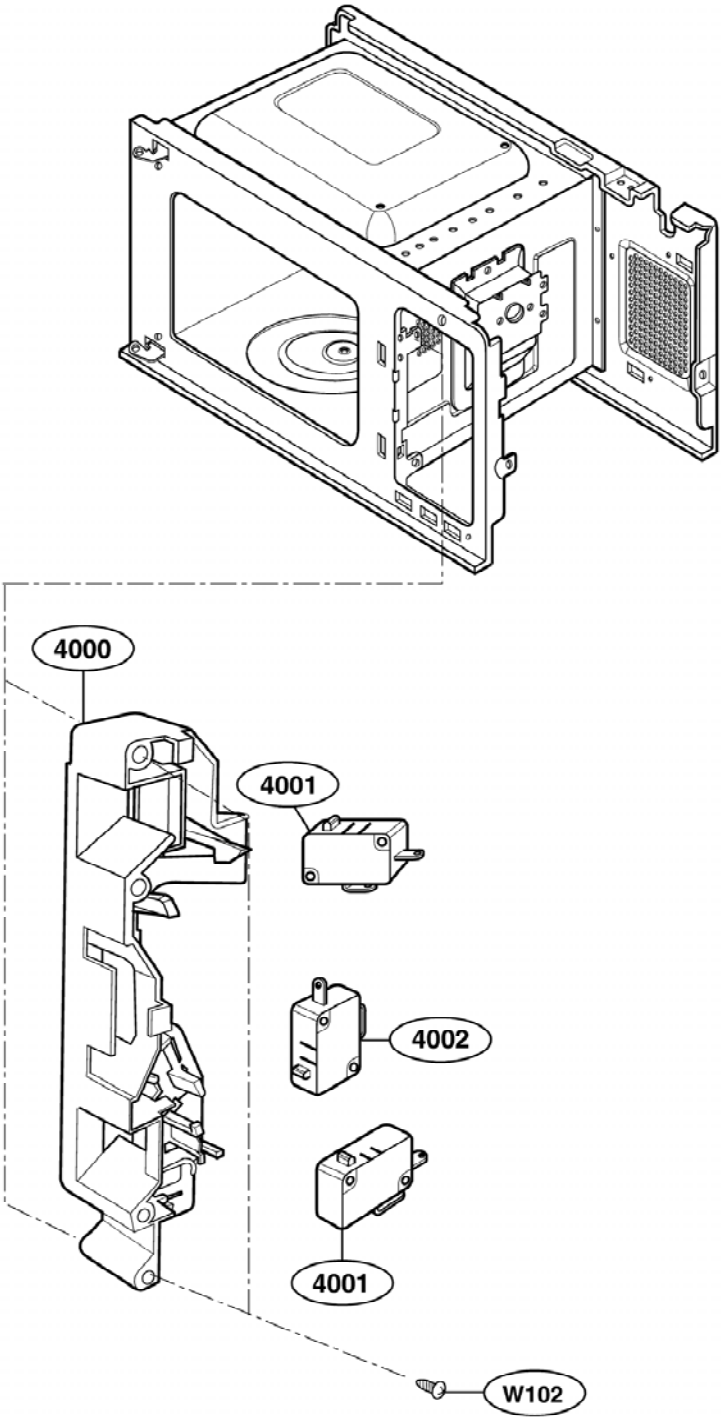

INTERIOR PARTS

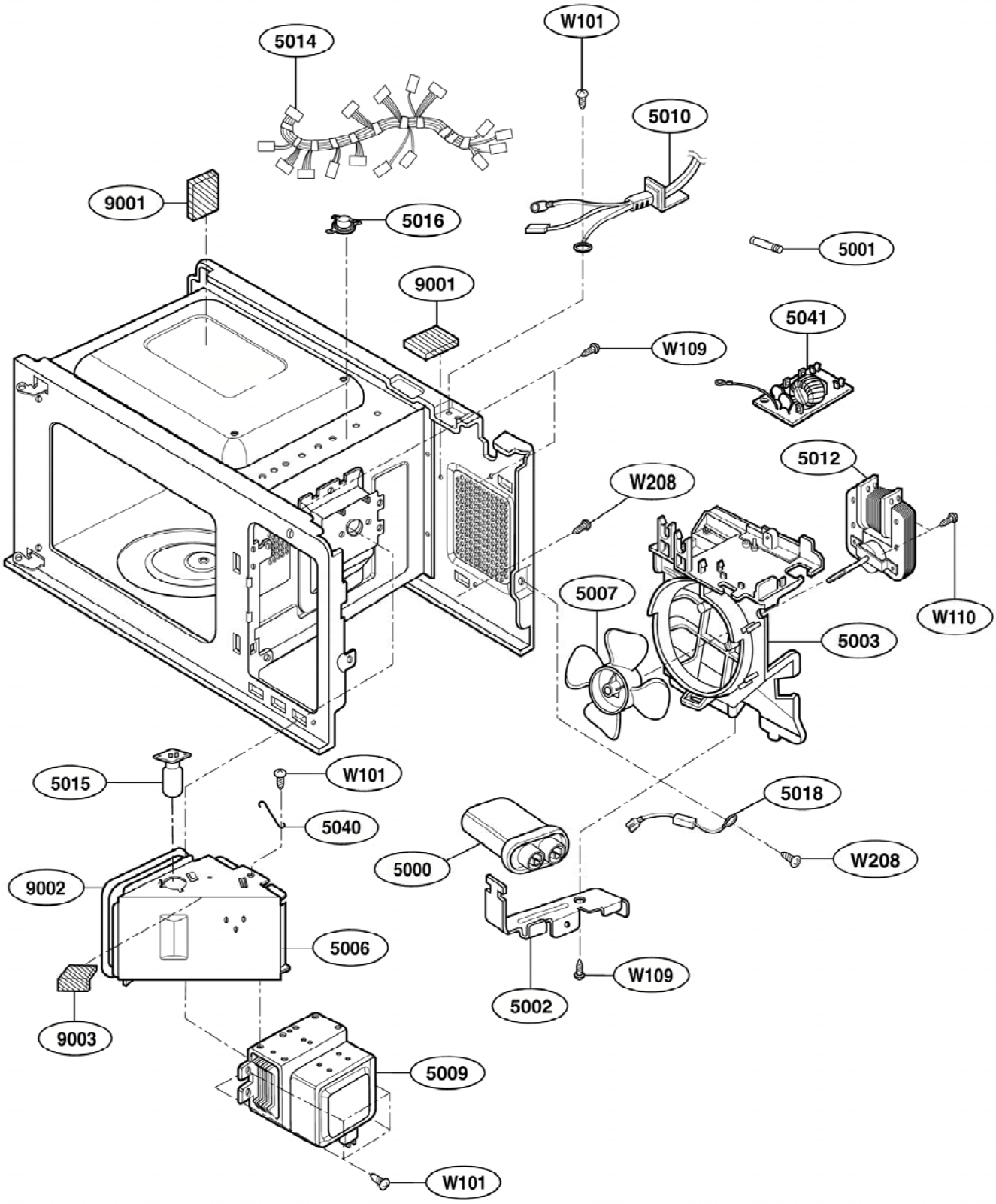

BASE PLATE PARTS

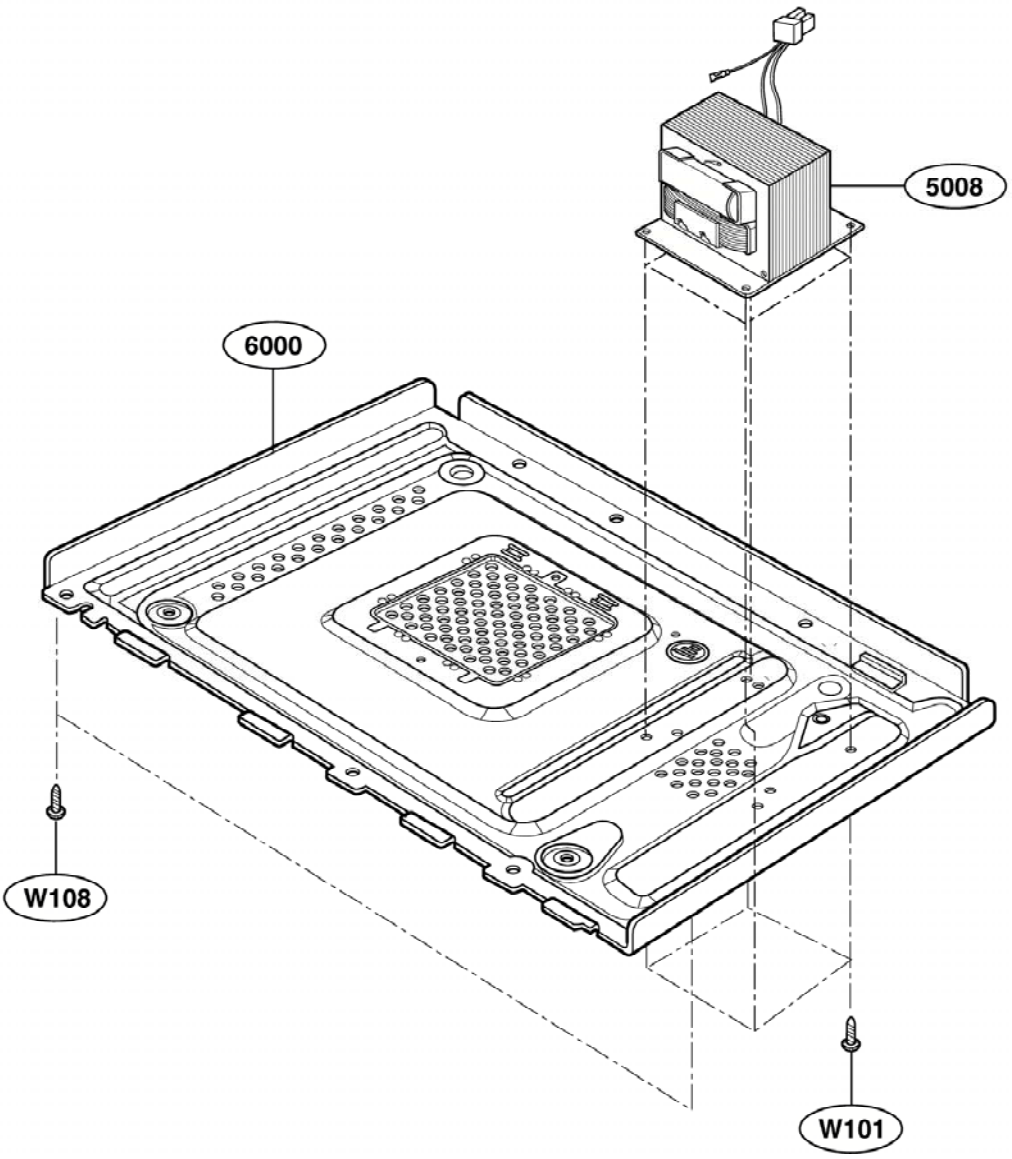

P/NO : 3828W5S5300

Printed in Korea