This Owner's Manual is provided and hosted by Appliance Factory Parts.

Appliance Factory Parts
Experts in BBQ, Humidifier, & Appliance Parts
1-800-955-7075

Kenmore 85032 Owner's Manual

Shop genuine replacement parts for Kenmore 85032

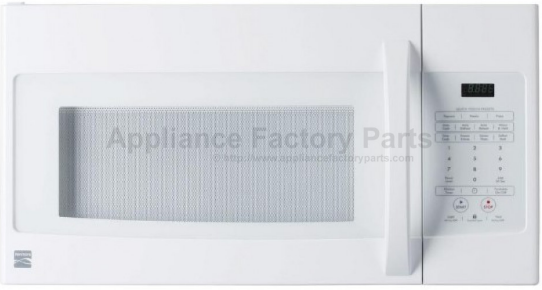

Find Your Kenmore Microwave Parts - Select From 532 Models

-------- Manual continues below --------

Use & Care Guide
Manual de Uso y Cuidado

English / Español

Models/Modelos: 721.8503*

Kenmore®

Microwave Oven
HORNO DE MICROONDAS

* = color number, número de color

P/No.: MFL39431005
Sears Brands Management Corporation
Hoffman Estates, IL 60179 U.S.A.

www.kenmore.com
www.sears.com

Table Of Contents

Warranty 2
Sears Service 3
Microwave Oven Safety 4
Getting to Know Your Microwave Oven 7
- How Your Microwave Oven Works 7
- Radio Interference 7
- For the Best Cooking Results 7
- Cookware Guide 8
- Operating Safety Precautions 8
- Electrical Connection 8
- Specifications 9
- Microwave Oven Features 9
- Control Panel Features 10-11

Microwave Cooking Tips 12-13
Using Your Microwave Oven 14
- Audible Signals 14
- Interrupting Cooking 14
- Clock 14
- Control Lock 14
- Kitchen Timer 15
- Cooktop Light 15
- Vent Fan 15
- Turntable On/Off 15
- Add 30 Sec. 16
- Two-Stage Cooking 16
- Timed Cooking 16
- Microwave Power Levels 17
- Auto Defrost 18
- Auto Defrost Table 19-20
- Defrosting Tips 21
- Warm & Hold 21
- Soften/Melt 22
- Melt Table 22
- Soften Table 22
- Using Quick Touch 23
- Auto Cook 24
- Cooking Guide for Auto Cook 24
- Auto Reheat 25
- Cooking Guide for Auto Reheat 25

Caring for Your Microwave Oven 26
- Caring for the Filters 27-28
- Replacing the Cooktop and Oven Lights 28-29

Questions and Answers 30
Troubleshooting 31
Service ..... Back Cover

Microwave Hood Combination Warranty

One Year Limited Warranty

When installed, operated and maintained according to all instructions supplied with the product, if this appliance fails due to a defect in material or workmanship within one year from the date of purchase, call 1-800-4-MY-HOME to arrange for free repair.

This warranty covers only defects in material and workmanship. Sears will NOT pay for:

1. Expendable items that can wear out from normal use, including but not limited to filters, belts, light bulbs, and bags.
2. A service technician to instruct the user in correct product installation, operation or maintenance.
3. A service technician to clean or maintain this product.
4. Damage to or failure of this product if it is not installed, operated or maintained according to all instructions supplied with the product.
5. Damage to or failure of this product resulting from accident, abuse, misuse or use for other than its intended purpose.
6. Damage to or failure of this product caused by the use of detergents, cleaners, chemicals or utensils other than those recommended in all instructions supplied with the product.
7. Damage to or failure of parts or systems resulting from unauthorized modifications made to this product.

Disclaimer of implied warranties; limitation of remedies:

Customer's sole and exclusive remedy under this limited warranty shall be product repair as provided herein. Implied warranties, including warranties of merchantability or fitness for a particular purpose, are limited to one year or the shortest period allowed by law. Sears shall not be liable for incidental or consequential damages. Some states and provinces do not allow the exclusion or limitation of incidental or consequential damages, or limitations on the duration of implied warranties of merchantability or fitness, so these exclusions or limitations may not apply to you.

This warranty applies only while this appliance is used in the United States and Canada.

This warranty gives you specific legal rights, and you may also have other rights which vary from state to state.

Sears Brands Management Corporation
Hoffman Estates, IL 60179
Sears Canada Inc.,Toronto,Ontario,Canada M5B 2B8

Master Protection Agreement

Congratulations on making a smart purchase.

Your new Kenmore® product is designed and manufactured for years of dependable operation. But like all products, it may require preventive maintenance or repair from time to time.

The Master Protection Agreement also helps extend the life of your new product. Here's what the Agreement* includes:

- ☑ **Parts and labor** needed to help keep products operating properly **under normal use,** not just defects. Our coverage goes **well beyond the product warranty.** No deductibles, no functional failure excluded from coverage - **real protection.**
- ☑ **Expert service** by a force of more than **10,000 authorized Sears service technicians,** which means someone you can trust, will be working on your product.
- ☑ **Unlimited service calls and nationwide service,** as often as you want us, whenever you want us.
- ☑ **"No-lemon" guarantee** - replacement of your covered product if four or more product failures occur within twelve months.
- ☑ **Product replacement** if your covered product can not be fixed.
- ☑ **Annual Preventive Maintenance Check** at your request - no extra charge.
- ☑ **Fast help by phone** - we call it **Rapid Resolution** - phone support from a Sears representative on all products. Think of us as a "talking owner's manual."
- ☑ **Power surge protection** against electrical damage due to power fluctuations.
- ☑ **$250 Food Loss Protection** annually for any food spoilage that is the result of mechanical failure of any covered refrigerator or freezer.
- ☑ **Rental reimbursement** if repair of your covered product takes longer than promised.
- ☑ **10% discount** off the regular price of any non-covered repair service and related installed parts.

Once you purchase the Agreement, a simple phone call is all that it takes for you to schedule service. You can call anytime, day or night, or schedule a service appointment online.
The Master Protection Agreement is a risk free purchase. If you cancel for any reason during the product warranty period, we will provide a full refund or a prorated refund anytime after the product warranty period expires. Purchase your Master Protection Agreement today!

Some limitations and exclusions apply. For prices and additional information in the U.S.A. call: 1-800-827-6655.

* Coverage in Canada varies on some items.
For full details, call Sears Canada: 1-800-361-6665.

Sears Installation Service

For Sears professional installation of home appliances, garage door openers, water heaters, and other major home items, in the U.S.A. or Canada call:
1-800-4-MY-HOME.

Your safety and the safety of others is very important.

We have provided many important safety messages in this manual and on your microwave oven. Always read and obey all safety messages.

This is the safety alert symbol.

This symbol alerts you to hazards that can kill or hurt you and others. All safety messages will be preceded by the safety alert symbol and the word "DANGER" or "WARNING." These words mean:

⚠ DANGER — **You will be killed or seriously injured if you do not follow instructions immediately.**

⚠ WARNING — **You can be killed or seriously injured if you do not follow instructions.**

All safety messages will identify the hazard, tell you how to reduce the chance of injury, and tell you what can happen if the instructions are not followed.

IMPORTANT SAFETY INSTRUCTIONS

When using electrical appliances, basic safety precautions should be followed, including the following:

⚠ WARNING: To reduce the risk of burns, electric shock, fire, injury to persons, or exposure to excessive microwave energy:

- Read all instructions before using the microwave oven.
- Read and follow the specific "PRECAUTIONS TO AVOID POSSIBLE EXPOSURE TO EXCESSIVE MICROWAVE ENERGY" found on page 5.
- The microwave oven must be grounded. Connect only to properly grounded outlet. See "GROUNDING INSTRUCTIONS" found on page 5.
- Install or locate the microwave oven only in accordance with the provided installation instructions.
- Some products such as whole eggs in the shell and sealed containers, such as closed jars, can explode and should not be heated in the microwave oven.
- Use the microwave oven only for its intended use as described in this manual.
- Do not use corrosive chemicals or vapors in the microwave oven. This type of oven is specifically designed to heat, cook, or dry food. It is not designed for industrial or laboratory use.
- As with any appliance, close supervision is necessary when used by children.
- Do not operate the microwave oven if it has a damaged cord or plug, if it is not working properly, or if it has been damaged or dropped.

SAVE THESE INSTRUCTIONS

IMPORTANT SAFETY INSTRUCTIONS

- The microwave oven should be serviced only by qualified service personnel. Call an authorized service company for examination, repair, or adjustment.
- See door surface cleaning instructions in the "Caring for Your Microwave Oven" section.
- To reduce the risk of fire in the oven cavity:
  - Do not overcook food. Carefully attend to the microwave oven when paper, plastic, or other combustible materials are placed inside the oven to facilitate cooking.
  - Remove wire twist-ties from paper or plastic bags before placing bags in oven.
  - If materials inside the oven ignite, keep oven door closed, turn oven off, and disconnect the power cord, or shut off power at the fuse or circuit breaker panel.
  - Do not use the cavity for storage purposes. Do not leave paper products, cooking utensils, or food in the cavity when not in use.
- This Microwave Oven is suitable for use above both gas and electric cooking and equipment.
- This Microwave Oven is intended to be used above ranges with a maximum width of 36 inches (91 cm).
- Clean Ventilating Hoods frequently - grease should not accumulate on hood or filter.
- When flaming foods under the hood, turn the fan on.
- Use care when cleaning the vent-hood filter. Corrosive cleaning agents, such as lye-based oven cleaners, may damage the filter.
- Oversized foods or oversized metal utensils should not be inserted in the microwave oven, as they may create a fire or risk of electric shock.
- Do not clean with metal scouring pads. Pieces can break off the pad and touch electrical parts, causing a risk of electric shock.
- Do not store anything directly on top of the microwave oven when the microwave oven is in operation.
- Do not cover or block any openings on the microwave oven.
- Do not store this microwave oven outdoors.
- Do not use the microwave oven near water - for example, near a kitchen sink, in a wet basement, near a swimming pool, or similar location.
- Do not immerse cord or plug in water.
- Keep cord away from heated surfaces.
- Do not let cord hang over edge of table or counter.
- Do not mount over a sink.
- Do not cover racks or any other part of the oven with metal foil. Doing so will cause overheating of the oven.
- Liquids such as water, coffee, or tea are able to overheat beyond the boiling point without appearing to be boiling due to surface tension of the liquid. Visible bubbling or boiling when the container is removed from the microwave oven is not always present. This could result in very hot liquids suddenly boiling over when a spoon or other utensil is inserted into the liquid. To reduce the risk of injury to persons:
  1) Do not overheat the liquid.
  2) Stir the liquid before and halfway through heating it.
  3) Do not use straight-sided containers with narrow necks.
  4) After heating, allow the container to stand in the microwave oven for a short time before removing the container.
  5) Use extreme caution when inserting a spoon or other utensil into the container.

SAVE THESE INSTRUCTIONS

PRECAUTIONS TO AVOID POSSIBLE EXPOSURE TO EXCESSIVE MICROWAVE ENERGY

(a) Do not attempt to operate this oven with the door open. Doing so can result in harmful exposure to microwave energy. It is important not to defeat or tamper with the safety interlocks.

(b) Do not place any object between the oven front face and the door, or allow soil or cleaner residue to accumulate on sealing surfaces.

(c) Do not operate the oven if it is damaged. It is particularly important that the oven door closes properly and that there is no damage to the:
(1) Door (bent)
(2) Hinges and latches (broken or loosened)
(3) Door seals and sealing surfaces

(d) The oven should not be adjusted or repaired by anyone except for a properly qualified service technician.

ELECTRICAL REQUIREMENTS

Observe all governing codes and ordinances. A 120-Volt, 60-Hz, AC-only, 15 or 20-amp fused electrical supply is required. A time delay fuse is recommended. It is recommended that a separate circuit, serving only this appliance, is provided.

⚠ DANGER

Electrical Shock Hazard
Plug into a grounded 3 prong outlet. Do not remove ground prong. Do not use an adapter. Do not use an extension cord. Failure to follow these instructions can result in death, fire, or electrical shock.

GROUNDING INSTRUCTIONS

•For all cord connected appliances:
The microwave oven must be grounded. In the event of an electrical short circuit, grounding reduces the risk of electric shock by providing an escape wire for the electric current. The microwave oven is equipped with a cord having a grounding wire with a grounding plug. The plug must be plugged into an outlet that is properly installed and grounded.

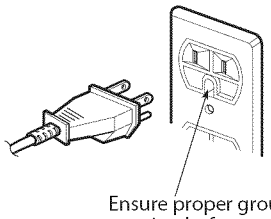

Ensure proper ground exists before use

⚠ WARNING: Improper grounding can result in a risk of electric shock. Consult a qualified electrician or service technician if you do not understand the grounding instructions, or if you wonder whether the appliance is properly grounded. Do not use an extension cord. If the power supply cord is too short, have a qualified electrician or service technician install an outlet near the microwave oven.

•For a permanently connected appliance:
This appliance has a short power supply cord to reduce the risk of anyone tripping over or becoming entangled in the cord. The microwave oven must be connected to a grounded, metallic, permanent wiring system, or an equipment grounding conductor should be run with the circuit conductors and connected to the equipment grounding terminal or lead on the microwave oven.

SAVE THESE INSTRUCTIONS

Getting to Know Your Microwave Oven

This section discusses the concepts behind microwave cooking. It also shows the basics that you need to know in order to operate your microwave oven. Please read this information before using your oven.

HOW YOUR MICROWAVE OVEN WORKS

Microwave ovens are safe. Microwave energy is not hot. It causes food to make its own heat, and it is this heat that cooks the food.

Microwaves are like TV waves, radio waves, or light waves. You cannot see them, but you can see the results of what they do.

A magnetron in the microwave oven produces microwaves. The microwaves move into the oven where they contact food as it turns on the turntable.

The glass turntable of your microwave oven lets microwaves pass through. The microwaves then bounce off a metal floor, back through the glass turntable, and are absorbed by the food.

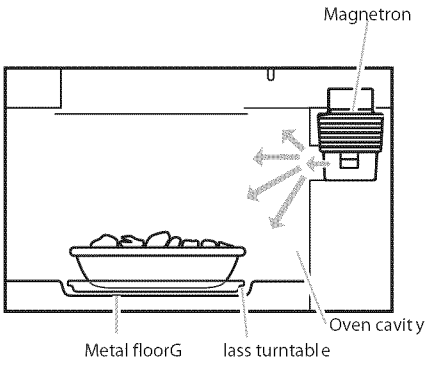

Microwaves pass through most glass, paper, and plastics without heating them, so food absorbs the energy. Microwaves bounce off metal containers so food does not absorb the energy.

RADIO INTERFERENCE

Using your microwave oven may cause interference to your radio, TV, or similar equipment. When there is interference, you can reduce it or remove it by:

- **Cleaning** the door and sealing surfaces of the oven.
- **Adjusting** the receiving antenna of the radio or television.
- **Moving** the receiver away from the microwave oven.
- **Plugging** the microwave oven into a different outlet so that the microwave oven and receiver are on different branch circuits.

FOR THE BEST COOKING RESULTS

- **Always cook food** for the shortest cooking time recommended. Check to see how the food is cooking. If needed, touch Add 30 Sec while the oven is operating, or after the cooking cycle is over (see the "Add 30 Sec" section).
- **Stir, turn over, or rearrange** the food being cooked about halfway through the cooking time for all recipes. This will help ensure that the food is evenly cooked.
- **If you do not have a cover for a dish,** use wax paper, or microwave-approved paper towels or plastic wrap. Remember to turn back a corner of the plastic wrap to vent steam during cooking.

COOKWARE GUIDE

Most heat resistant, nonmetallic cookware is safe for use in your microwave oven. However, to test cookware before using, follow these steps:

1. Place empty cookware in the microwave oven.
2. Measure 1 cup (250ml) of water in a glass measuring cup and place it in the oven beside the cookware.
3. Microwave on 100% power for 1 minute. If the dish is warm, it should not be used for microwave cooking.

NOTE:
Some dishes (melamine, some ceramic dinnerware, etc.) absorb microwave energy, becoming too hot to handle and slowing cooking time. Cooking in metal containers, not designed for microwave use, could damage the oven, as could containers with hidden metal (twist-ties, foil lining, staples, metallic glaze or trim).

OPERATING SAFETY PRECAUTIONS

- **Never** lean on or allow a child to swing on the door when it is open.
- **Use hot pads.** Microwave energy does not heat containers, but the heat from the food can make the container hot.
- **Do not** use newspaper or other printed paper in the oven.
- **Do not** dry flowers, fruit, herbs, wood, paper, gourds, or clothes in the oven.
- **Do not** start a microwave oven when it is empty. This may shorten the life-span of the oven. To practice programming, put a container of water in the oven before starting. It is normal for the oven door to look wavy after the oven has been running for a while.
- **Do not** try to melt paraffin wax in the oven. Paraffin wax will not melt in a microwave oven because it allows microwaves to pass through it.
- **Do not** operate the microwave oven unless the glass turntable is securely in place and can rotate freely. The turntable can rotate in either direction. **Make sure** the turntable is correct-side up in the oven. **Handle your turntable with care** when removing it from the oven to avoid breaking it.
- **When using a browning dish,** the browning dish bottom must be at least 3/16 inch above the turntable. Follow the directions supplied with the browning dish.
- **Never cook or reheat a whole egg inside the shell.** Steam buildup in whole eggs may cause them to burst, and possibly damage the oven. **Slice** hard-boiled eggs before heating. In rare cases, poached eggs have been known to explode. **Cover** poached eggs and **allow** a standing time of one minute before cutting into them.
- **For best results, stir any liquid several times during heating or reheating.** Liquids heated in certain containers (especially containers shaped like cylinders) may overheat. The liquid may splash during or after heating or when adding ingredients (coffee granules, tea bags, etc.). This can harm you or damage the microwave oven.
- **Microwaves** may not reach the center of a roast. The heat spreads from the outer to the center cooked areas, just as in regular oven cooking. This is one of the reasons for letting some foods (for example, roasts or baked potatoes) stand for a while after cooking, or for stirring some foods during the cooking time.
- **Do not deep fry in the oven.** Microwavable utensils are not suitable and it is difficult to maintain appropriate deep-frying temperatures.
- **Do not overcook potatoes.** At the end of the recommended cooking time, potatoes should be slightly firm because they will continue cooking during standing time. **After microwaving,** let potatoes stand for 5 minutes. They will finish cooking while standing.

ELECTRICAL CONNECTION

If your electric power line or outlet voltage is less than 110 volts, cooking times may be longer. Have a qualified electrician check your electrical system.

SPECIFICATIONS

Power Supply	120V AC, 60 Hz
Rated Power Consumption	1500W
Microwave Output	*1000W
Rated Current	14.0A
Overall Dimensions(WxHxD)	29 7/8" x 16 7/8" x 15 1/8"
Oven Cavity Dimensions(WxHxD)	21 9/16" x 9 1/4" x 14 1/8"
Capacity of Oven Cavity	1.6 cu.ft

*IEC 60705 RATING STANDARD
Specifications subject to change without prior notice.

MICROWAVE OVEN FEATURES

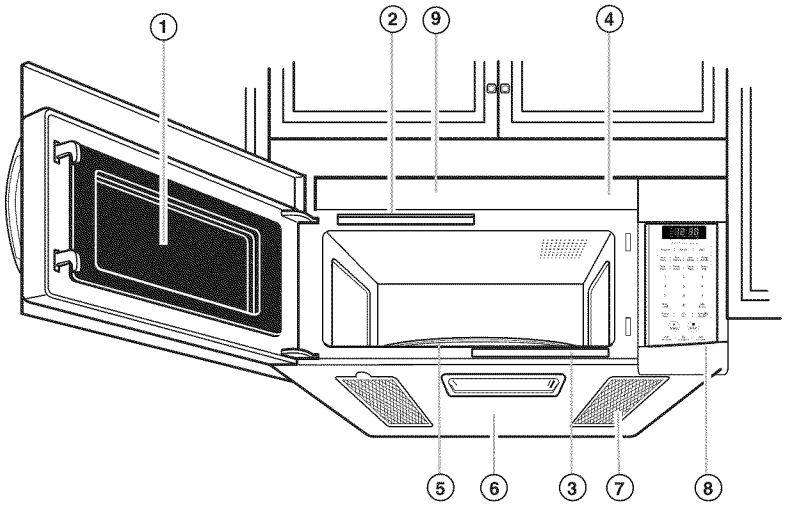

The microwave oven is designed to make your cooking experience as enjoyable and productive as possible. To get you up and running quickly, the following is a list of the oven's basic features:

1. **Metal Shielded Window:** The shield prevents microwaves from escaping. It is designed as a screen to allow you to view food as it cooks.
2. **Model and Serial Number Plate**
3. **Cooking Guide Label**

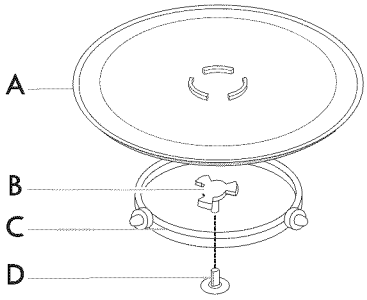

A. Turntable
B. Hub
C. Support
D. Shaft

4. **Vent Grille**
5. **Turntable:** The turntable turns food as it cooks for even cooking. It must be in the oven during operation for best cooking results.
6. **Cooktop Light**
7. **Grease Filters:** See "Caring for the Filters" section.
8. **Control Panel:** Touch the pads on this panel to perform all functions.
9. **Charcoal Filter** (behind Vent Grille): The turntable reverses rotation each time the microwave oven door is opened and closed. This helps cook food evenly. Do not operate the microwave oven without the turntable in place.

To Install:

1. Place the support on the oven cavity bottom.
2. Place the turntable on the support. Fit the raised, curved lines in the center of the turntable bottom between the three spokes of the hub. The rollers on the support should fit inside the turntable bottom ridge.

CONTROL PANEL FEATURES

Your microwave oven control panel lets you select the desired cooking function quickly and easily. All you have to do is touch the necessary Command Pad. The following is a list of all the Command and Number Pads located on the control panel. **For more information on these features, see the "Using your Microwave Oven" section.**

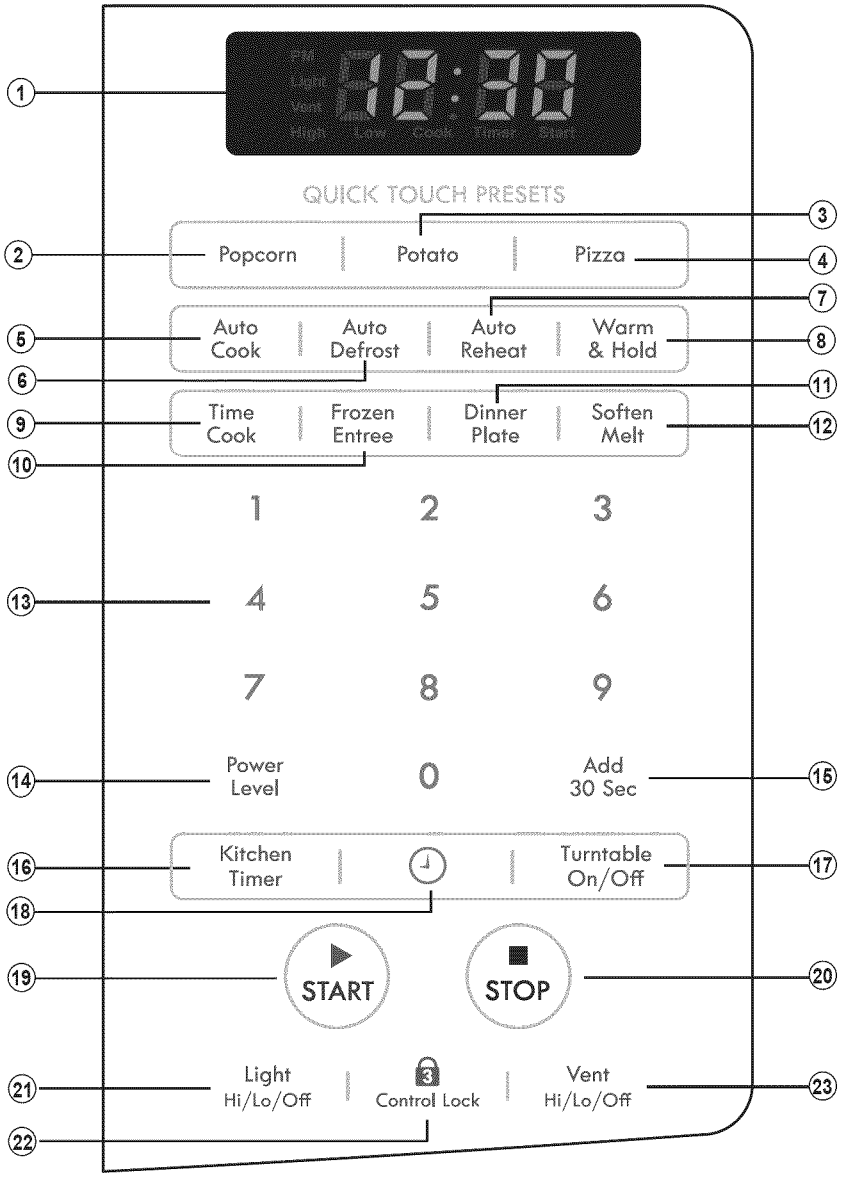

1. **Display:** The display includes a clock and indicators that show the time of day, cooking time settings, cook powers, quantities, weights and cooking functions selected.
2. **Popcorn:** Touch this pad to pop one of two bag sizes of popcorn without entering a cook time or power. Remove metal rack before cooking popcorn.
3. **Potato:** Touch this pad to cook potatoes without entering a cook time or power.
4. **Pizza:** Touch this pad to reheat one or several slices of pizza without entering a cook time or power.
5. **Auto Cook:** Touch this pad to cook microwavable foods without entering a cook time or power.
6. **Auto Defrost:** Touch this pad, followed by Number Pads, to thaw frozen meat by weight.
7. **Auto Reheat:** Touch this pad to reheat microwavable foods without entering a cook time or power.
8. **Warm & Hold:** Touch this pad to keep hot, cooked foods safely warm in your oven for up to 99 minutes, 99 seconds. Warm & Hold can be used by itself, or it can automatically follow a cooking cycle.
9. **Time Cook:** Touch this pad, followed by Number Pads, to set a cooking time.
10. **Frozen Entree:** Touch this pad to cook a 10 to 20 ounce (284 to 567g) frozen entree without entering a cook time or power.
11. **Dinner Plate:** Touch this pad to cook without entering a cook time or power.
12. **Soften/Melt:** Touch this pad to soften ice cream, cream cheese, butter or frozen juice and melt chocolate, cheese or butter.
13. **Number Pads:** Touch number pads to enter cooking time, cook power, quantity, weight, or food category.
14. **Power Level:** Touch this pad after the cook time has been set, followed by a Number Pad to set the amount of microwave energy released to cook the food. The higher the number, the higher the microwave power or "cooking speed."
15. **Add 30 Sec.:** Touch this pad to cook for 30 seconds at 100% cook power, or to add extra time at the set cook power to your cooking cycle.
16. **Kitchen Timer:** Touch this pad to set the kitchen timer.
17. **Turntable On/Off:** Touch this pad to turn off the turntable. "OFF" will appear in the display.
18. **Clock:** Touch this pad to enter the correct time of day.
19. **START:** Touch this pad to start a function. If the door is opened after the oven begins to cook, retouch START.
20. **STOP:** Touch this pad to erase an incorrect command, cancel a program during cooking, or to clear the Display.
21. **Light Hi/Lo/Off:** Touch this pad to turn the light on high, night (low) or off.
22. **Control Lock:** Touch and hold this pad for three seconds to lock the control panel.
23. **Vent Hi/Lo/Off:** Touch this pad to turn the vent on high, low or off.

NOTE: A programming tone will sound each time you touch a pad. If you try to enter incorrect instruction, you will not hear any tones. Touch STOP and re-enter the instructions.

Microwave Cooking Tips

Amount of Food

- **If you increase or decrease** the amount of food you prepare, the time it takes to cook that food will also change. For example, if you double a recipe, add a little more than half the original cooking time. Check for readiness and, if necessary, add more time in small increments.

Starting Temperature of Food

- **The lower the temperature** of the food being put into the microwave oven, the longer it takes to cook. Food at room temperature will reheat quicker than food at refrigerator temperature.

Composition of Food

- **Food with a lot of fat and sugar** will heat faster than food containing a lot of water. Fat and sugar will also reach a higher temperature than water in the cooking process.
- **The more dense the food**, the longer it takes to heat. "Very dense" food, like meat, takes longer to heat than lighter, more porous food, like sponge cakes.

Size and Shape

- **Smaller pieces of food** will cook faster than larger pieces. Also, same shaped pieces cook more evenly than differently shaped pieces.
- **With foods that have different thicknesses**, the thinner parts will cook faster than the thicker parts. Place the thinner parts of chicken wings and legs in the center of the dish.

Stirring and Turning Foods

- **Stirring and turning foods** spreads heat quickly to the center of the dish and avoids overcooking at the outer edges of the food.

Covering Food

Cover food to reduce splattering, shorten cooking times, and keep food moist.

You can use any covering that lets microwaves pass through. See "Getting to Know Your Microwave Oven" for materials that microwaves will pass through.

Releasing Pressure in Foods

- **Several foods** (for example: baked potatoes, sausages, egg yolks, and some fruits) are tightly covered by a skin or membrane. Steam can build up under the membrane during cooking, causing the food to burst. To relieve the pressure and to prevent bursting, pierce these foods before cooking with a fork, cocktail pick, or toothpick.

Using Standing Time

- **Always allow food to stand**, either in or out of the oven, after cooking power stops. Standing time after defrosting and cooking allows the temperature to evenly spread throughout the food, improving the cooking results. For inside oven standing time, you can program a "0" power second stage of the cooking cycle. See Two-Stage Cooking.
- **The length of the standing time** depends on how much food you are cooking and how dense it is. Sometimes it can be as short as the time it takes to remove the food from the oven and take it to the serving table. However, with a larger, denser food item, the standing time may be as long as 10 minutes.

Arranging Food

For best results, place food evenly on the plate. You can do this in several ways:

- **If you are cooking several items of the same food**, such as baked potatoes, place them in a ring pattern for uniform cooking.
- **When cooking foods of uneven shapes or thickness**, such as chicken breasts, place the smaller or thinner area of the food towards the center of the dish where it will be heated last.
- **Layer thin slices of meat** on top of each other.
- **When you cook or reheat whole fish**, score the skin – this prevents cracking.
- **Do not** let food or a container touch the top or sides of the oven. This will prevent possible arcing. Arcing is a spark that can cause damage to the oven interior.

Using Aluminum Foil

NOTE: Metal containers should not be used in a microwave oven. There are, however, some exceptions. If you have purchased food prepackaged in an aluminum foil container, refer to the instructions on the package. When using aluminum foil containers, cooking times may be longer because microwaves will only penetrate the top of the food. When using aluminum containers without package instructions, follow these guidelines:

- Place the container in a glass bowl and add some water so that it covers the bottom of the container; no more than 1/4 in. (.64 cm) high. This ensures even heating of the container bottom.
- Always remove the lid to avoid damage to the oven.
- Use only undamaged containers.
- Do not use containers taller than 3/4 in. (1.9 cm).
- The container must be at least half filled.
- To avoid arcing, there must be a minimum of 1/4 in. (.64 cm) between the aluminum container and the walls of the oven and also between two aluminum containers.
- Always place the container on the turntable.
- Shield, with small pieces of aluminum foil, parts of food that may cook quickly; such as wing tips and leg ends of poultry.
- Heating food in aluminum foil containers usually takes up to double the time compared to reheating in plastic, glass, china, or paper containers. The time when food is ready will vary depending upon the type of container used.
- Let food stand for 2 to 3 minutes after heating so that heat is spread evenly throughout container.

Cooking you should not do in your microwave oven

- Do not put canned foods in the oven. Closed glass jars may explode, resulting in damage to the oven.
- Do not use the microwave oven to sterilize objects (baby bottles, etc.). It is difficult to keep the oven at the high temperature needed for sterilization.

Using Your Microwave Oven

This section gives instructions for operating each function. Please read this section carefully.

AUDIBLE SIGNALS

Audible signals are available to guide you when setting and using your oven.

- **A programming tone** will sound each time you touch a pad.
- **Seven tones** signal the end of a Kitchen Timer countdown.
- **Four tones** signal the end of a cooking cycle.

CLOCK

When your microwave oven is first plugged in, or after a power failure, the Display will show a colon : If a time of day is not set, the colon will show on the Display until you touch "Clock."

Example: To set the clock for 10:30 A.M. or P.M.

Touch:	Display Shows:
1. STOP	:
2.	12:00
3. 1 0 3 0	10:30
4. START	10:30

NOTES:

- If you enter in an incorrect time and touch "Clock" you cannot set time of day. Enter the correct time.
- If you touch STOP while setting the clock, the display will show the last time of day set or a colon : if no time of day has been set.

INTERRUPTING COOKING

You can stop the oven during a cycle by opening the door. The oven stops heating and the fan turns off, but the light stays on.

To restart cooking, close the door and Touch START.

If you do not want to continue cooking, open the door and touch STOP.

CONTROL LOCK

Use this safety feature to lock the control panel when you are cleaning the oven, or so that children cannot use the oven unsupervised.

To set CONTROL LOCK:

Touch:	Display Shows:
1. STOP	Time of day.
2. Control Lock	Touch and hold until "L" appears in the display (approximately 4 seconds).

To cancel CONTROL LOCK:

Touch:	Display Shows:
1. Control Lock	Touch and hold until "L" disappears in the display (approximately 4 seconds).

KITCHEN TIMER

Your microwave oven can be used as a kitchen timer. You can set up to 99 minutes, 99 seconds.

Example: To set for three minutes.

Touch:	Display Shows:
1. Kitchen Timer	:0
2. 3 0 0	3:00
3. START	3:00 Timer and Time counting down

COOKTOP LIGHT

The pad on the bottom center of the control panel controls the cooktop light.

Example: To set the light for HIGH.

Touch:	Display Shows:
1. Light Hi/Lo/Off	Time of day
Once for HIGH light. Twice for LOW light.	
2. Light Hi/Lo/Off	Time of day

To turn off, touch pad one or two times depending on light setting.

VENT FAN

The pad on the bottom left of the control panel controls the 2-speed vent fan.

Example: To set the vent fan speed.

Touch:	Display Shows:
1. Vent Hi/Lo/Off	Time of day
Once for HIGH Twice for LOW	
2. Vent Hi/ Lo/Off	Time of day
Turn off fan when desired	

NOTE: If the temperature from the range or cooktop below the oven gets too hot, the vent fan in the vent hood will automatically turn on at the LEVEL 5 setting to protect the oven. It may stay on up to an hour to cool the oven. When this occurs, the Vent pad will not turn the fan off. You cannot turn the vent fan off during microwave cooking.

TURNTABLE ON/OFF

For best cooking results, leave the turntable on. It can be turned off for large dishes.

Touch:	Display Shows:
1. Turntable On/Off	oFF
2. Turntable On/Off	on

Press **Turntable On/Off** to turn the turntable on or off.

CAUTION: Sometimes the turntable can become hot to the touch during and after cooking. Do not run the oven empty without food in it.

ADD 30 SEC.

This is a time-saving pad. It is a simplified control that lets you quickly set and start microwave cooking at 100% power without the need to touch START.

Example: To cook for one minute.

Touch:			Display Shows:
1.	■ STOP		Time of day.
2.	Add 30 Sec	Twice	Time counting down and **COOK.**

NOTE: Each time you touch ADD 30 SEC, it will add 30 seconds up to 99 min 59 seconds.

TIMED COOKING

This feature lets you program a specific cook time and power. For best results, there are 10 power level settings in addition to HIGH (100%) power. Refer to the "Microwave Power Levels Table" for more information.

NOTE: If you do not select a power level, the oven will automatically cook at HIGH (100%) power.

Example: To cook for five minutes, 30 seconds at 80% power.

Touch:		Display Shows:
1.	Time Cook	:0
2.	5 3 0	5:30
3.	Power Level	P-HI
4.	8	P-80
5.	▶ START	Time counting down and **COOK.**

TWO-STAGE COOKING

For best results, some recipes call for different power levels during a cook cycle. You can program your oven for two power level stages during the cooking cycle.

Example: To set a 2-stage cook cycle.

Touch:		Display Shows:
1.	Time Cook	:0
2.	3 0 0 To set a 3 minute cook time for first stage.	3:00
3.	Power Level	P-HI
4.	8 To set an 80% cook power for the first stage.	P-80
5.	Time Cook	:0
6.	7 0 0 To set a 7 minute cook time for second stage.	7:00
7.	Power Level	P-HI
8.	5 To set a 50% cook power for the second stage. **NOTE:** You can program a "0" power second stage for standing time inside the oven.	P-50
9.	▶ START	Time counting down and **COOK.**
10.	When the first stage is over, you will hear two short tones as the oven begins the second cook stage.	

MICROWAVE POWER LEVELS

For best results, some recipes call for different cook powers. The lower the cook power, the slower the cooking. Each number from 1 to 9 stands for a different percentage of full cook power.

The following chart gives the percentage of cook power each number pad stands for, and the cook power name usually used.

It also tells you when to use each cook power. Follow recipe or food package instructions if available.

NOTE: Refer to a reliable cookbook for cooking times based on the 1,000 Watt cook power of your microwave oven.

COOK POWER	LEVEL	WHEN TO USE IT
100% of full power	High	• Quickly heating convenience foods and foods with high water content, such as soups and beverages. • Cooking tender cuts of meat, ground meat or chicken.
9 = 90% of full power		• Heating cream soups.
8 = 80% of full power		• Heating rice, pasta, or casseroles.
7 = 70% of full power	Medium-High	• Cooking and heating foods that need a Cook Power lower than High (for example, whole fish and meat loaf) or when food is cooking too fast. • Reheating a single serving of food.
6 = 60% of full power		• Cooking that requires special care, such as cheese and egg dishes, pudding, and custards. • Finishing cooking casseroles.
5 = 50% of full power	Medium	• Cooking ham, whole poultry, and pot roasts. • Simmering stews.
4 = 40% of full power		• Melting chocolate. • Heating pastries.
3 = 30% of full power	Medium-Low, Defrost	• Manually defrosting precooked and other foods, such as bread, fish, meats and poultry.
2 = 20% of full power		• Softening butter, cheese, and ice cream.
1 = 10% of full power	Low	• Keeping food warm. • Taking chill out of fruit.
0 = 0% of full power	None	• Standing time in oven.

NOTE: Once the cook time has been entered, you can also use the Cook Power pad as a second Kitchen Timer by entering "0" for the Cook Power. The oven will count down the cooking time you set without cooking.

AUTO DEFROST

Three defrost sequences are preset in the oven. The auto defrost feature provides you with the best defrosting method for frozen foods. The cooking guide will show you which defrost sequence is recommended for the food you are defrosting.

For added convenience, the Auto Defrost includes a built-in beep mechanism that reminds you to check, turn over, separate, or rearrange the food in order to get the best defrost results. Three different defrosting levels are provided:

1. **MEAT**
2. **POULTRY**
3. **FISH**

Available weight is 0.1~6.0 lbs

Example: To defrost 1.2 lbs of ground beef.

Touch:	Display Shows:
1. Auto Defrost	dEF 1
2. 1 and 2 to enter weight	1.2
3. START	Time counting down.

NOTE: When you touch the START pad, the display changes to a defrost time count down. The oven will beep during the DEFROST cycle. At this time, open the door and turn, separate, or rearrange the food. Remove any portions that have thawed. Return frozen portions to the oven and touch START to resume the defrost cycle.

OPERATING TIPS

- For best results, remove fish, shellfish, meat, and poultry from its original closed paper or plastic package (wrapper). Otherwise, the wrap will hold steam and juice close to the foods, which can cause the outer surface of the foods to cook.
- For best results, roll your ground meat into a ball before freezing. During the DEFROST cycle, the microwave will signal when it is time to turn the meat over. Scrape off any excess frost from the meat and continue defrosting.
- Place foods in a shallow container or on a microwave roasting rack to catch drippings.

This table shows food type selections and the weights you can set for each type. For best results, loosen or remove covering on food.

FOOD	TOUCH Auto Defrost	WEIGHTS YOU CAN SET (tenths of a pound)
Meat	1	0.1 to 6.0 (45g to 2.7kg)
Poultry	2	0.1 to 6.0 (45g to 2.7kg)
Fish	3	0.1 to 6.0 (45g to 2.7kg)

Weight conversion table

You are probably used to measuring food in pounds and ounces that are fractions of a pound (for example, 4 ounces equals 1/4 pound). However, in order to enter food weight in Auto Defrost, you must specify pounds and tenths of a pound.

If the weight on the food package is in fractions of a pound, you can use the following table to convert the weight to decimals.

Equivalent Weight	
OUNCES	**DECIMAL WEIGHT**
1.6	.10
3.2	.20
4.0	.25 One-Quarter Pound
4.8	.30
6.4	.40
8.0	.50 One-Half Pound
9.6	.60
11.2	.70
12.0	.75 Three-Quarters Pound
12.8	.80
14.4	.90
16.0	1.0 One Pound

NOTE: If between two decimal weights, choose the lower weight for the best defrosting results.

AUTO DEFROST TABLE

NOTE: Meat of irregular shape and large, fatty cuts of meat should have the narrow or fatty areas shielded with foil at the beginning of the defrost sequence.

Meat settings

FOOD	SETTING	AT BEEP	SPECIAL INSTRUCTIONS
BEEF			
Ground Beef, Bulk	MEAT	Remove thawed portions with fork. Turn over. Return remainder to oven.	Do not defrost less than 1/4 lb. Freeze in ball shape.
Ground Beef, Patties	MEAT	Separate and rearrange.	Do not defrost less than 2 oz. patties. Depress center when freezing.
Round Steak	MEAT	Turn over. Cover warm areas with aluminum foil.	Place in a microwave safe dish.
Tenderloin Steak	MEAT	Turn over. Cover warm areas with aluminum foil.	Place in a microwave safe dish.
Stew Beef	MEAT	Remove thawed portions with fork. Separate remainder. Return remainder to oven.	Place in a microwave safe dish.
Pot Roast, Chuck Roast	MEAT	Turn over. Cover warm areas with aluminum foil.	Place in a microwave safe dish.
Rib Roast	MEAT	Turn over. Cover warm areas with aluminum foil.	Place in a microwave safe dish.
Rolled Rump Roast	MEAT	Turn over. Cover warm areas with aluminum foil.	Place in a microwave safe dish.
LAMB			
Cubes for Stew	MEAT	Remove thawed portions with fork. Return remainder to oven.	Place in a microwave safe dish.
Chops (1 inch thick)	MEAT	Separate and rearrange.	Place in a microwave safe dish.
PORK			
Chops (1/2 inch thick)	MEAT	Separate and rearrange.	Place in a microwave safe dish.
Hot Dogs	MEAT	Separate and rearrange.	Place in a microwave safe dish.
Spareribs Country-style Ribs	MEAT	Turn over. Cover warm areas with aluminum foil.	Place in a microwave safe dish.
Sausage, Links	MEAT	Separate and rearrange.	Place in a microwave safe dish.
Sausage, Bulk	MEAT	Remove thawed portions with fork. Turn over. Return remainder to oven.	Place in a microwave safe dish.
Loin Roast, Boneless	MEAT	Turn over. Cover warm areas with aluminum foil.	Place in a microwave safe dish.

AUTO DEFROST TABLE (CONTINUED)

Poultry setting

FOOD	SETTING	AT BEEP	SPECIAL INSTRUCTIONS
CHICKEN Whole (up to 6 lbs)	POULTRY	Turn over (finish defrosting breast side down). Cover warm areas with aluminum foil.	Place chicken breast-side up in a microwave safe dish. Finish defrosting by immersing in cold water. Remove giblets when chicken is partially defrosted.
Cut-up		Separate pieces and rearrange. Turn over. Cover warm areas with aluminum foil.	Place in a microwave safe dish. Finish defrosting by immersing in cold water.
CORNISH HENS Whole	POULTRY	Turn over. Cover warm areas with aluminum foil.	Place in a microwave safe dish. Finish defrosting by immersing in cold water.
TURKEY Breast (up to 6 lbs)	POULTRY	Turn over. Cover warm areas with aluminum foil.	Place in a microwave safe dish. Finish defrosting by immersing in cold water.

Fish setting

FOOD	SETTING	AT BEEP	SPECIAL INSTRUCTIONS
FISH Fillets	FISH	Turn over. Separate fillets when partially thawed, if possible.	Place in a microwave safe dish. Carefully separate fillets under cold water.
Steaks	FISH	Separate and rearrange.	Place in a microwave safe dish. Run cold water over to finish defrosting.
Whole	FISH	Turn over.	Place in a microwave safe dish. Cover head and tail with foil; do not let foil touch sides of microwave. Finish defrosting by immersing in cold water.
SHELLFISH			
Crab meat	FISH	Break apart. Turn over.	Place in a microwave safe dish.
Lobster tails	FISH	Turn over and rearrange.	Place in a microwave safe dish.
Shrimp	FISH	Separate and rearrange.	Place in a microwave safe dish.
Scallops	FISH	Separate and rearrange.	Place in a microwave safe dish.

DEFROSTING TIPS

- When using Auto Defrost, the weight to be entered is the net weight in pounds and tenths of pounds (the weight of the food minus the container).
- Before starting, make sure to remove any and all metal twist-ties that often come with frozen food bags, and replace them with strings or elastic bands.
- Open containers, such as cartons, before placing in the oven.
- Always slit or pierce plastic pouches or packaging.
- If food is foil wrapped, remove foil and place food in a suitable container.
- Slit the skin of skinned food, such as sausage.
- Bend plastic pouches of food to ensure even defrosting.
- Always underestimate defrosting time. If defrosted food is still icy in the center, return it to the microwave oven for more defrosting.
- The length of defrosting time varies according to how solidly the food is frozen.
- The shape of the package affects how quickly food will defrost. Shallow packages will defrost more quickly than a deep block.
- As food begins to defrost, separate the pieces. Separated pieces defrost more easily.
- Use small pieces of aluminum foil to shield parts of food such as chicken wings, leg tips, fish tails, or areas that start to get warm. Make sure the foil does not touch the sides, top, or bottom of the oven. The foil can damage the oven lining.
- For better results, let food stand after defrosting. (For more information on standing time, see the "Microwave Cooking Tips" section).
- Turn over food during defrosting or standing time. Break apart and remove food as required.

WARM & HOLD

You can safely keep hot, cooked food warm in your microwave oven for up to 99 minutes, 99 seconds (about 1 hour, 40 minutes). You can use Warm & Hold by itself, or to automatically follow a cooking cycle.

Example: To use the Warm & Hold.

Touch:	Display Shows:
1. Warm & Hold	HoLd
2. START	HoLd

At the end of the Warm & Hold, **End** will be displayed and four tones will sound.

To make Warm & Hold automatically follow another cycle:

- While you are touching in cooking instructions, touch Warm & Hold before touching START.
- When the last cooking cycle is over, you will hear two tones. "Hold" will come on while the oven continues to run.
- You can set Warm & Hold to follow Auto Defrost, Cook, or Two-Stage cooking.

NOTES:

- Warm & Hold operates for up to 99 minutes, 99 seconds.
- Opening the oven door cancels Warm & Hold. Close the door and touch Warm & Hold, then touch START if additional Warm & Hold time is desired.
- Covered food should remain covered during Warm & Hold.
- Pastry items (pies, turnovers, etc.) should be uncovered during Warm & Hold.
- Complete meals kept warm on a dinner plate should be covered during Warm & Hold.
- Do not use more than one complete Warm & Hold cycle (about 1 hour, 40 minutes). The quality of some foods will suffer with extended time.

SOFTEN/MELT

The oven uses low power to melt foods (butter, chocolate, marshmallows and cheese). See the following table.

Example: To Melt 8 oz. Chocolate.

Touch:		Display Shows:
1. STOP		Time of day.
2. Soften Melt	(twice)	2
3. 2	(for chocolate)	2
select 1 for 4 oz and 2 for 8 oz		
4. 2		8 oz
5. START		

SOFTEN TABLE

Code	Category	Direction	Amount
1	**Butter**	Unwrap and place in microwavable container. No need to cover butter. Butter will be at room temperature and ready for use in recipe.	1, 2 or 3 sticks
2	**Ice Cream**	Place container in oven. Ice cream will be soft enough to make scooping easier.	Pint, Quart, Half gallon
3	**Cream Cheese**	Unwrap and place in microwavable container. Cream cheese will be at room temperature and ready for use in recipe.	3 or 8 oz.
4	**Frozen Juice**	Remove top. Place in oven. Frozen juice will be soft enough to easily mix with water.	6, 12 or 16 oz.

MELT TABLE

Code	Category	Direction	Amount
1	Butter/ Margarine	Unwrap and place in microwavable container. No need to cover butter. Stir at the end of cooking to complete melting.	1, 2 or 3 sticks
2	Chocolate	Choose the 4 or 8 oz. (actual weight) selection to melt squares of baking chocolate. Unwrap squares and place them in a microwavable container. Stir at the end of cycle to complete melting. If using chocolate morsels always use the 4 oz. setting. Stir at the end of the cycle to complete melting. Add time as necessary if more than 4 oz. dry measure is being melted.	4 or 8 oz.
3	Cheese	Use processed cheese food only. Cut into cubes. Place in a single layer in microwavable container Stir at the end of cooking to complete melting.	8 or 16 oz.
4	Marsh-mallows	Large or miniature marshmallows may be used. Place in microwavable container. Stir at the end of cycle to complete melting.	5 or 10 oz.

USING QUICK TOUCH

Your oven menu has been pre-programmed to cook food automatically.

POPCORN

The Popcorn quick touch pad lets you pop 3 and 3.5 ounce bags of commercially packaged microwave popcorn. Pop only one package at a time. If you are using a microwave popcorn popper, follow manufacturer's instructions. To set your microwave oven correctly, remove the metal rack and follow this chart:

Example: To pop a 3 oz. bag.

Touch:	Display Shows:
Popcorn	3.0
Once for 3.5 oz Twice for 3.0 oz	Time counting down and **COOK**

When the cook time is over, you will hear four tones and **End** will display.

PIZZA

The Pizza quick touch pad lets you reheat up to three slices of pizza (based on a 5 ounce slice).

NOTE:
- Place on a low plate and paper towel
- Do not cover

Example: To reheat two slices of pizza.

Touch:	Display Shows:
Pizza	2
Once for one slice Twice for two slices Three times for three slices	Time counting down and **COOK.**

When the cook time is over, you will hear four tones and **End** will display.

FROZEN ENTREE

The Frozen Entree quick touch pad lets you cook 10 and 20 ounce plates of commercially packaged microwave frozen entrees without entering cooking times and power levels.
Be sure to remove tray from outer carton.
Do not remove film cover, but cut it to vent.

Example: To reheat a 20 oz. frozen entree.

Touch:	Display Shows:
Frozen Entree	20 oz
Once for 10 oz Twice for 20 oz	Time counting down and **COOK.**

When the cook time is over, you will hear four tones and **End** will display.

POTATO

The Potato quick touch pad lets you cook potatoes with preset times and cook powers. You can choose from one to four potatoes.

NOTE:
- Cooking times are based on an average 8 ounce potato. Before baking, pierce potato with fork several times.
- After baking, let stand for five minutes.

Example: To cook two potatoes.

Touch:	Display Shows:
Potato	2
Once for one potato Twice for two potatoes Three times for three potatoes Four times for four potatoes	Time counting down and **COOK.**

When the cook time is over, you will hear four tones and **END** will display.

DINNER PLATE

The Dinner Plate quick touch pad lets you cook one of two servings of dinner plates without entering time. The food should stand for three minutes.

Example: To cook two potatoes.

Touch:	Display Shows:
Dinner Plate	2
Once for one serving Twice for two servings	Time counting down and **COOK.**

When the cook time is over, you will hear four tones and **End** will display.

AUTO COOK

Auto Cook provides five preset categories for cooking.

Example: To cook two cups of Casserole.

Touch: **Display Shows:**

1. Auto Cook — Ac-4

Choose food category

Category	Touch pad Time
Fresh Vegetable	1 (Ac-1)
Frozen Vegetable	2 (Ac-2)
Rice	3 (Ac-3)
Casserole	4 (Ac-4)
Bacon	5 (Ac-5)

Touch: **Display Shows:**

2. 2 — Time counting down and **COOK.**

Enter quantity/servings

Category	Number of cups
Fresh Vegetable	1-4 cups
Frozen Vegetable	1-4 cups
Rice	1-2 cups
Casserole	1-4 cups
Bacon	1-3 slices

When the cook time is over, you will hear four tones and **End** will display.

COOKING GUIDE FOR AUTO COOK

CODE	CATEGORY	QUANTITY	DIRECTIONS
1	FRESH VEGETABLE	1 cup	Place in a microwavable bowl or casserole. Add water according to the quantity. • 1-2 cups: add 2 tbsp water. • 3-4 cups: add 2 tbsp water. Cover with plastic wrap and vent. Let stand for three minutes
		2 cups	
		3 cups	
		4 cups	
2	FROZEN VEGETABLE	1 cup	Place in a microwavable bowl or casserole. • 1-2 cups: add 2 tbsp water. • 3-4 cups: add 2 tbsp water. Cover with plastic wrap and vent. Let stand for three minutes.
		2 cups	
		3 cups	
		4 cups	
3	RICE	1 cup	Place in a microwavable bowl or casserole. Cover with plastic wrap and vent. Let stand for five minutes.
		2 cups	
4	CASSEROLE	1 cup	Place in a microwavable bowl or casserole. Cover with plastic wrap and vent. Stir and let stand for three minutes.
		2 cups	
		3 cups	
		4 cups	
5	BACON	1 slice	Place bacon strips on a dinner plate lined with paper towels and cook.
		2 slices	
		3 slices	

AUTO REHEAT

Auto Reheat provides four preset categories for reheating.

Example: To reheat two servings of Beverage.

Touch: **Display Shows:**

1. Auto Reheat — rH-1

Choose food category.

Category	Touch pad Time
Beverage	1 (rH-1)
Soup/Sauce	2 (rH-2)
Casserole	3 (rH-3)
Roll/Muffin	4 (rH-4)

Touch: **Display Shows:**

2. 2 — Time counting down and **COOK.**

Enter quantity/servings

Category	Number of Cups/Items
Beverage	1-2 cups
Soup/Sauce	1-4 cups
Casserole	1-4 cups
Roll/Muffin	1-4 pieces

When the cook time is over, you will hear four tones and **End** will display.

COOKING GUIDE FOR AUTO REHEAT

CODE	CATEGORY	SERVING AMOUNT	DIRECTION
1	BEVERAGE	1 cup	Remove from display package and place on a plate. Do not cover. (Be careful; the beverage will be very hot!)
		2 cups	
2	SOUP/SAUCE	1 cup	Place in shallow microwavable casserole dish. Cover with vented plastic wrap. Stir and let stand for three minutes.
		2 cups	
		3 cups	
		4 cups	
3	CASSEROLE	1 cup	Place in a microwavable bowl or casserole dish. Cover with plastic wrap. Stir and let stand for three minutes.
		2 cups	
		3 cups	
		4 cups	
4	ROLL/MUFFIN	1 piece (2 oz.)	Place on paper towel. Do not cover.
		2 pieces (4 oz.)	
		3 pieces (6 oz.)	
		4 pieces (8 oz.)	

Caring for Your Microwave Oven

In order to ensure that your microwave oven looks good and works well for a long time, you should maintain it properly. For proper care, please follow these instructions carefully.

For interior surfaces: Wash often with warm, sudsy water and a sponge or soft cloth.

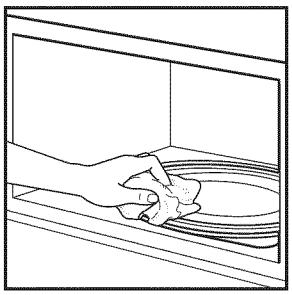

Use only mild, nonabrasive soaps or a mild detergent. Be sure to keep the areas clean where the door and oven frame touch when closed. Wipe well with clean cloth.

Over time, surfaces may stain as a result of food particles splattering during cooking. This is normal.

For stubborn soil: Boil a cup of water in the oven for two to three minutes. Steam will soften the soil. To get rid of odors inside the oven, boil a cup of water with some lemon juice or vinegar in it.

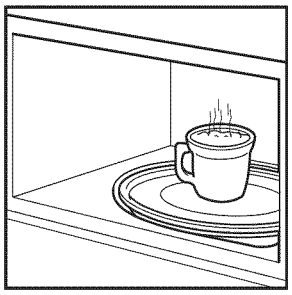

For exterior surfaces and control panel: Use a soft cloth with spray glass cleaner. Apply the spray glass cleaner to the soft cloth; do not spray directly on the oven.

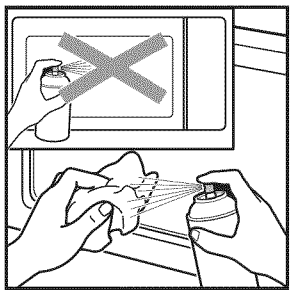

NOTE: Abrasive cleansers, steel wool pads, gritty wash cloths, some paper towels, etc., can damage the control panel and the interior and exterior oven surfaces.

To clean turntable and turntable support: Wash in mild, sudsy water. For heavily soiled areas, use a mild cleanser and scouring sponge. The turntable and turntable support are dishwasher safe.

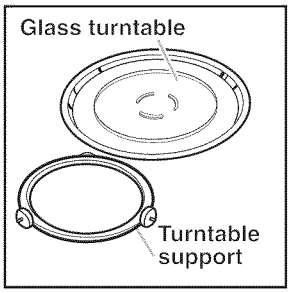

CARING FOR THE FILTERS

The grease filters should be removed and cleaned often; at least once a month.

NOTE: If your microwave hood combination is installed to recirculate air, the charcoal filter (Part No. 5230W1A011C) is available from Sears by calling 1-800-4-MY-HOME. The charcoal filter cannot be cleaned and should be replaced every 6 to 12 months.

Grease filters (Part No. 5230W1A012C):

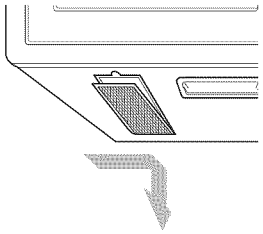

1. Unplug microwave oven or disconnect power.
2. To remove grease filters, slide each filter to the side. Pull filters downward and push to the other side. The filter will drop out.

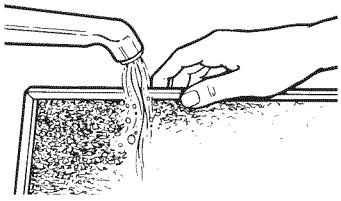

3. Soak grease filters in hot water and a mild detergent. Scrub and swish to remove embedded dirt and grease. Rinse well and shake to dry. Do not clean filters with ammonia, corrosive cleaning agents, such as lye-based oven cleaners, or place them in a dishwasher. The filters will turn black or become damaged.
4. To replace grease filters, slide filter in the frame slot on one side of the opening. Push filter upward and push to the other side to lock into place.

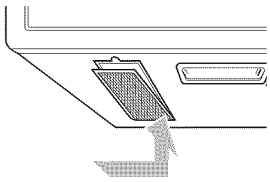

5. Plug in microwave oven or reconnect power.

Charcoal filter (Part No. 5230W1A011C):

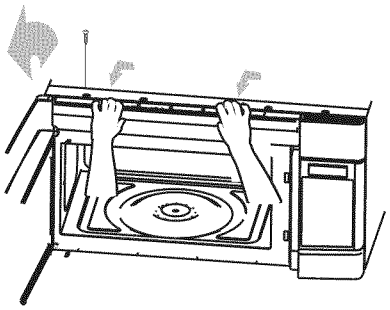

1. Unplug microwave oven or disconnect power.
2. Remove the vent grille mounting screw.
3. Slide the grille left and tip forward. Lift out to remove.

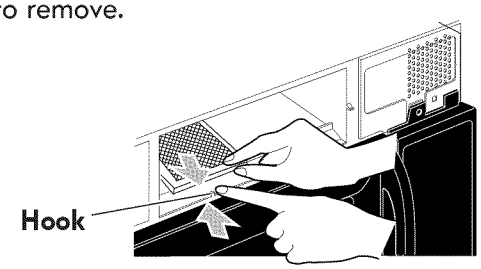

4. Lift the back of the charcoal filter. Slide the filter straight out.

CARING FOR THE FILTERS (CONTINUED)

5. Slide a new charcoal filter into place. The filter should rest at the angle shown.

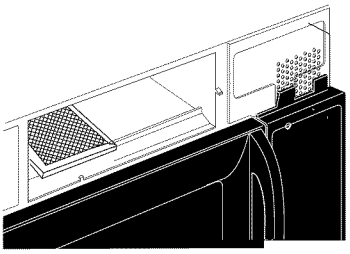

6. Slide the bottom of the vent grille into place. Push the top and slide right until it snaps into place. Replace the mounting screw.

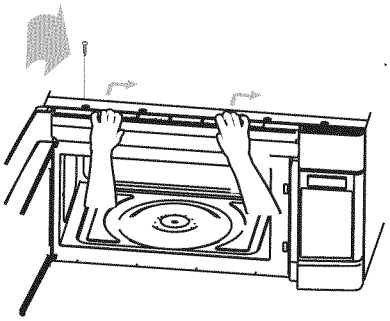

7. Plug in microwave oven or reconnect power.

NOTE: Do not operate the hood without the grease filters in place.

REPLACING THE COOKTOP AND OVEN LIGHTS

The cooktop light

1. Unplug microwave oven or disconnect power.

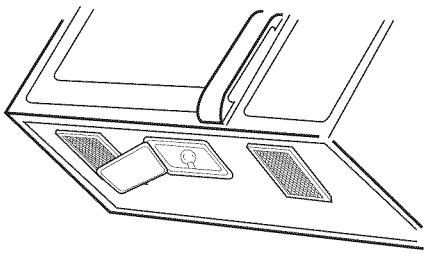

2. Remove the bulb cover mounting screw.
3. Replace bulb with candelabra-base 30-watt bulb (Part No.6912W1Z004B) available from Sears by calling 1-800-4-MY-HOME.
4. Plug in microwave oven or reconnect power.

The oven light

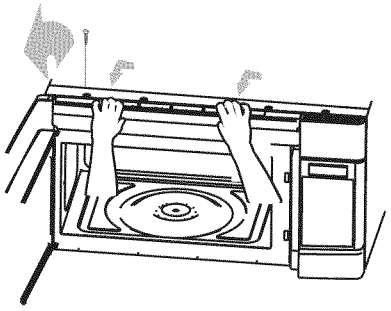

1. Unplug microwave oven or disconnect power.
2. Remove the vent grille mounting screw.
3. Slide the grille left and tip forward, then lift out to remove.

REPLACING THE COOKTOP AND OVEN LIGHTS (CONTINUED)

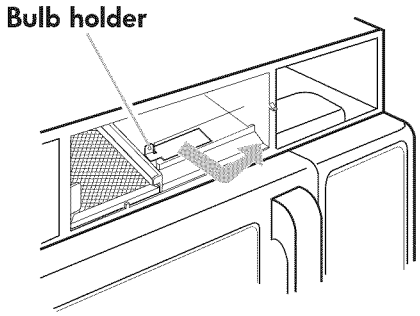

4. Lift up the bulb holder.

5. Replace the bulb with a candelabra-base 30-watt bulb (Part No. 6912W1Z004A) from Sears by calling 1-800-4-MY-HOME.

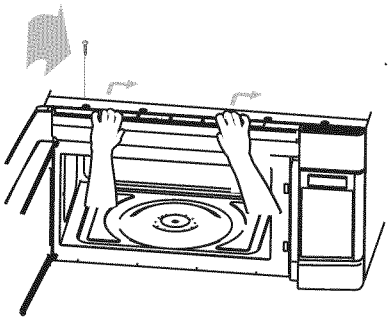

6. Slide the bottom of the vent grille into place. Push the top and slide right until it snaps into place. Replace the mounting screw.

7. Plug in microwave oven or reconnect power.

Questions and Answers

QUESTIONS	ANSWERS
Can I operate my microwave oven without the turntable or turn the turntable over to hold a large dish?	No. If you remove or turn over the turntable, you will get poor cooking results. Dishes used in your oven must fit on the turntable.
Can I use either metal or aluminum pans in my microwave oven?	You can use aluminum foil for shielding (use small, flat pieces), small skewers, and shallow foil trays (if tray is no taller than 3/4 in. [1.9 cm] deep and is filled with food to absorb microwave energy). Never allow metal to touch walls or door.
Is it normal for the turntable to turn in either direction?	Yes. The turntable reverses rotation each time the microwave oven door is opened and closed. This helps cook food evenly.
Sometimes the door of my microwave oven appears wavy. Is this normal?	This appearance is normal and does not affect the operation of your oven.
What are the humming noises that I hear when my microwave oven is operating?	You may hear the sound of the transformer when the magnetron tube cycles on.
Why does the dish become hot when I microwave food in it? I thought that this should not happen.	As the food becomes hot it will conduct the heat to the dish. Be prepared to use hot pads to remove food after cooking.
What does "standing time" mean?	"Standing time" means that after the timed cooking period ends, food should be allowed to stand either inside or outside of the oven to completely finish cooking. Outside oven standing time will allow the oven to be available for other use. For inside oven standing time, you can program a "0" power second stage of the cooking cycle. See Two-Stage Cooking.
Why does steam come out of the air exhaust vent?	Steam is normally produced during cooking. The microwave oven has been designed to vent this steam.
Can I pop popcorn in my microwave oven? How do I get the best results?	Yes. Pop packaged microwave popcorn while following the manufacturer's guidelines. Do not use regular paper bags. Do not re-pop unpopped kernels. Do not pop popcorn in glass cookware.

Troubleshooting

Most cooking problems often are caused by little things that you can find and fix without tools of any kind. Check the lists below and on the next page before calling for assistance or service. If you still need help, call Sears Service at 1-800-4-MY-HOME.

MICROWAVE OVEN DOES NOT WORK

PROBLEM	CAUSE
Nothing works.	•The power supply cord is not plugged into a grounded 3 prong outlet. (See the "Electrical Requirements" and "Electrical Connection" sections.) •A household fuse has blown or a circuit breaker has tripped. •The electric company has had a power failure.
The microwave oven will not run.	•You are using the oven as a timer. Touch STOP to cancel the Kitchen Timer. •The door is not firmly closed and latched. •You did not touch START. •You did not follow directions exactly. •An operation that you set earlier is still running. Touch STOP to cancel that operation.

COOKING TIMES

PROBLEM	CAUSE
Food is not cooked enough.	•The electric supply to your home or wall outlets is low or lower than normal. Your electric company can tell you if the line voltage is low. Your electrician or service technician can tell you if the outlet voltage is low. •The cook power is not at the recommended setting. Check the Microwave Power Levels chart on page 17. •Refer to the Microwave Cooking Tips section.
The display shows a time counting down but the oven is not cooking.	•The oven door is not closed completely. •You have set the controls as a Kitchen Timer. Touch STOP to cancel the Kitchen Timer.

TURNTABLE

PROBLEM	CAUSE
The turntable will not turn.	•The turntable is not correctly in place. The glass plate should be correct-side up and sitting firmly on the center shaft. •The turntable has been set to OFF. •The support is not operating correctly. Remove the turntable and restart the oven. If the support still does not move, call Sears Service at 1-800-4-MY-HOME. Cooking without the turntable can give you poor results.

TONES

PROBLEM	CAUSE
You do not hear the programming or end-of-cycle tone.	•You have not entered the correct command.

Get it fixed, at your home or ours!

Your Home

For troubleshooting, product manuals and home solutions advice:

managemylife

www.managemylife.com

For repair - **in your home** - of **all** major brand appliances, lawn and garden equipment, or heat ing and cooling systems, **no matter who made it, no matter who sold it!**

For the replacement parts, accessories and owner's manuals that you need to do-it-yourself.

For Sears professional installation of home appliances and items like garage door openers and water heaters.

1-800-4-MY-HOME® **(1-800-469-4663)**

Call anytime, day or night (U.S.A. and Canada)

www.kenmore.com **www.sears.com**

Our Home

For repair of carry-in items like vacuums, lawn equipment, and electronics, call anytime for the location of your nearest

Sears Parts & Repair Service Center

1-800-488-1222 (U.S.A.) **1-800-469-4663** (Canada)

www.kenmore.com **www.sears.com**

To purchase a protection agreement on a product serviced by Sears:

1-800-827-6655 (U.S.A.) **1-800-361-6665** (Canada)

Para pedir servicio de reparación a domicilio, y para ordenar piezas:

1-888-SU-HOGAR®

(1-888-784-6427)

www.kenmore.com

Au Canada pour service en français:

1-800-LE-FOYERMC

(1-800-533-6937)

www.sears.com

Sears

® Registered Trademark / TM Trademark of KCD IP, LLC in the United States, or Sears Brands, LLC in other countries
® Marca Registrada / TM Marca de Fábrica de KCD IP, LLC en Estados Unidos, o Sears Brands, LLC in otros países
MC Marqye de cinnerce / MD Marque déposée de Sear Brands, LLC.