This Owner's Manual is provided and hosted by Appliance Factory Parts.

Appliance Factory Parts
Experts in BBQ, Humidifier, & Appliance Parts
1-800-955-7075

Royal RY9700 Owner's Manual

Shop genuine replacement parts for Royal RY9700

Find Your Royal Vacuum Cleaner Parts - Select From 772 Models

-------- Manual continues below --------

Eminence™

ASSEMBLY SCHEMATIC

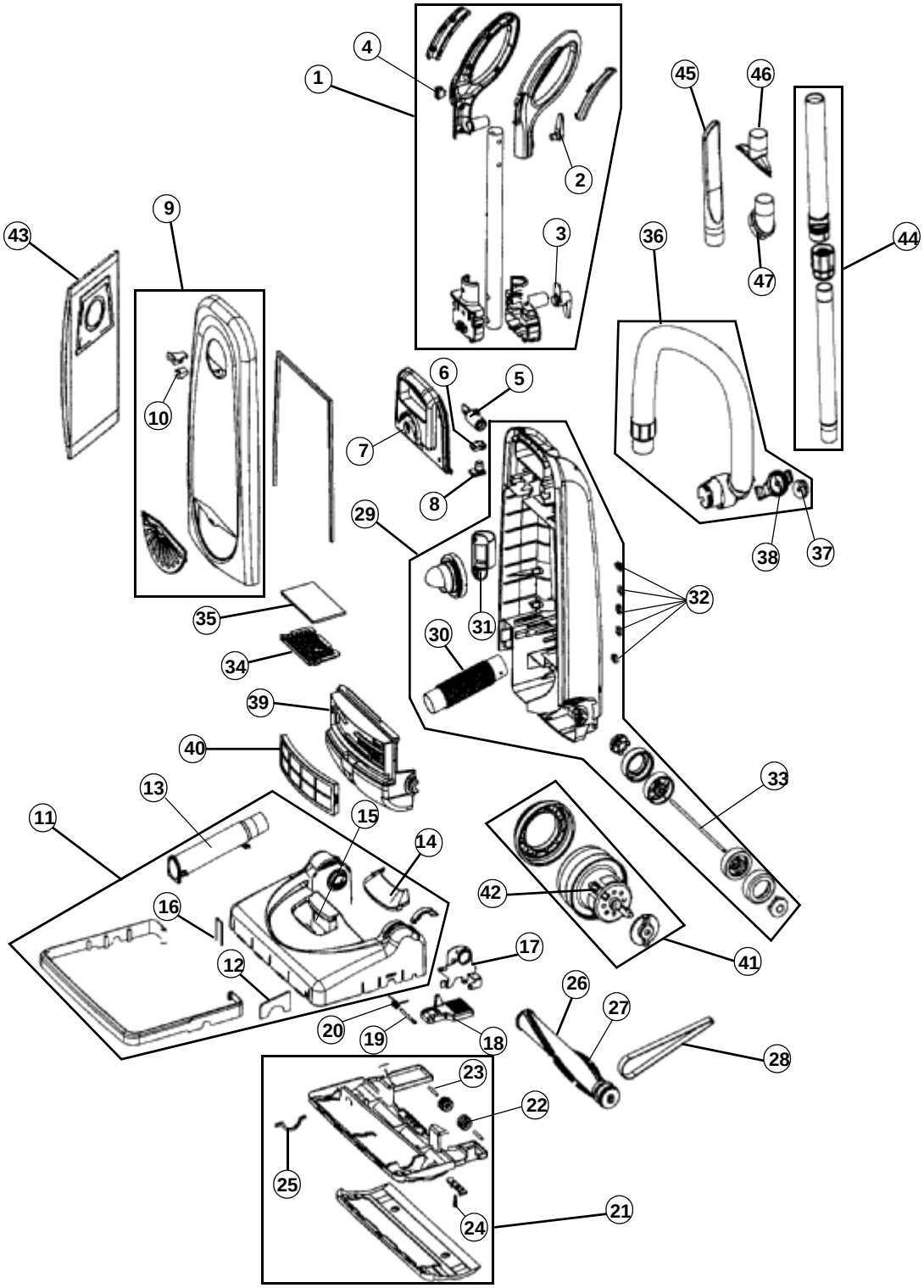

MODEL NO.

RY9700

Item	Part Number	Model's To Fit	Part Description
1	3622605000	RY9700	HANDLE ASSEMBLY
2	1PD0435000	RY9700	UPPER CORD HOOK
3	1PD0450000	RY9700	LOWER CORD HOOK
4	1PD0425000	RY9700	SWITCH
5	3622716200	RY9700	BODY HARNESS ASSEMBLY
6	3622716300	RY9700	F.B.I. INDICATOR HARNESS
7	1PD0185000	RY9700	F.B.I. LAMP INDICATOR
8	3625402200	RY9700	VALVE INDICATOR
9	3621453700	RY9700	FRONT PANEL ASSEMBLY
10	1PD0281000	RY9700	LATCH SPRING
11		RY9700	NOZZLE ASSEMBLY
12	3624012900	RY9700	FELT SEAL, NOZZLE
13	1PD0140000	RY9700	LOWER DIRT TUBE
14	3621453300	RY9700	LAMP COVER
15	1920906000	RY9700	906 BULB
16	3625111300	RY9700	SPRING BELT GUIDE
17	3622505400	RY9700	BELT GUIDE
18	1PD0325000	RY9700	HANDLE RELEASE PEDAL
19	1PD0330000	RY9700	HANDLE RELEASE PEDAL PIN
20	1PD0335000	RY9700	HANDLE RELEASE PEDAL SPRING
21	3624503200	RY9700	NOZZLE GUARD ASSEMBLY
22	1PD0145000	RY9700	FRONT ROLLER
23	1PD0020000	RY9700	FRONT ROLLER AXLE
24	1PD0025000	RY9700	NOZZLE RELEASE SCREW
25	3624012800	RY9700	FELT SEAL, NOZZLE GUARD
26	3629311500	RY9700	BRUSH ROLL ASSEMBLY
27	1PD0550000	RY9700	BRUSH ROLL BRISTLE
28	1PD0034600	RY9700	STYLE 21 BELT
29	3620434000	RY9700	BACK PANEL ASSEMBLY
30	3623210800	RY9700	LOWER HOSE
31	1PD0190000	RY9700	HOSE CONNECTOR
32	1PD0080000	RY9700	TOOL CLIPS
33	1PD0085000	RY9700	REAR AXLE
34	3622401300	RY9700	FILTER SUPPORT
35	3621910300	RY9700	INNER FOAM CHAMBER FILTER

MODEL NO.

RY9700

MODEL NO.

RY9700

Item	Part Number	Model's To Fit	Part Description
36	3623211000	RY9700	HOSE ASSEMBLY
37	1PD0010600	RY9700	HOSE ADAPTOR COVER
38	1PD0030B00	RY9700	HOSE ADAPTOR VALVE
39		RY9700	MOTOR COVER
40	3621910200	RY9700	HEPA EXHAUST FILTER ASSEMBLY
41	3962820550	RY9700	MOTOR ASSEMBLY
42	3629005500	RY9700	THERMOSTAT
43	1116016000	RY9700	TYPE U BAG - HEPA
	3115016000	RY9700	TYPE U BAG - HEPA / 7 PACK
44	3624416600	RY9700	TELESCOPE WAND ASSEMBLY
45	3628101800	RY9700	CREVICE TOOL
46	3628101900	RY9700	UPHOLSTERY TOOL
47	3629311400	RY9700	DUSTING BRUSH