This Owner's Manual is provided and hosted by Appliance Factory Parts.

Appliance Factory Parts
Experts in BBQ, Humidifier, & Appliance Parts
1-800-955-7075

KITCHENAID KP26M1XBP4 Owner's Manual

Shop genuine replacement parts for KITCHENAID KP26M1XBP4

KitchenAid

Find Your KITCHENAID Mixer Parts - Select From 532 Models

-------- Manual continues below --------

PARTS LIST

for

KitchenAid®

6 QT. STAND MIXER

PROFESSIONAL 600 BOWL LIFT

MODELS:

KP26M1XMR4 (Meringue)
KP26M1XBS4 (Blue Steel)
KP26M1XCM4 (Cinnamon)
KP26M1XDP4 (Dark Pewter)
KP26M1XLC4 (Licorice)
KP26M1XMC4 (Metallic Chrome)
KP26M1XNP4 (Nickel Pearl)
KP26M1XPM4 (Pearl Metallic)
KP26M1XBP4 (Brass Pearl)
KP26M1XBR4 (Bronze Pearl)
KP26M1XCE4 (Copper Pearl)
KP26M1XRC4 (Cayenne)
KP26M1XSV4 (Silver Sage)
KP26M1XSE4 (Seashell)
KP26M1XAZ4 (Azure Blue)
4KP26M1XMR4 (Meringue)
4KP26M1XBS4 (Blue Steel)
4KP26M1XDP4 (Dark Pewter)
4KP26M1XLC4 (Licorice)
4KP26M1XMC4 (Metallic Chrome)
4KP26M1XNP4 (Nickel Pearl)
4KP26M1XPM4 (Pearl Metallic)

FSP®

FOR CUSTOMER SATISFACTION ALWAYS USE
FACTORY SPECIFICATION PARTS

FSP®

KITCHENAID ST. JOSEPH MICHIGAN 49085

4−06 Litho in U.S.A. (skr)
© 2006 KITCHENAID
Part No. 8211764 Rev. B

COLOR VARIATION PARTS

For Models: KP26M1X_ _4, 4KP26M1X_ _4

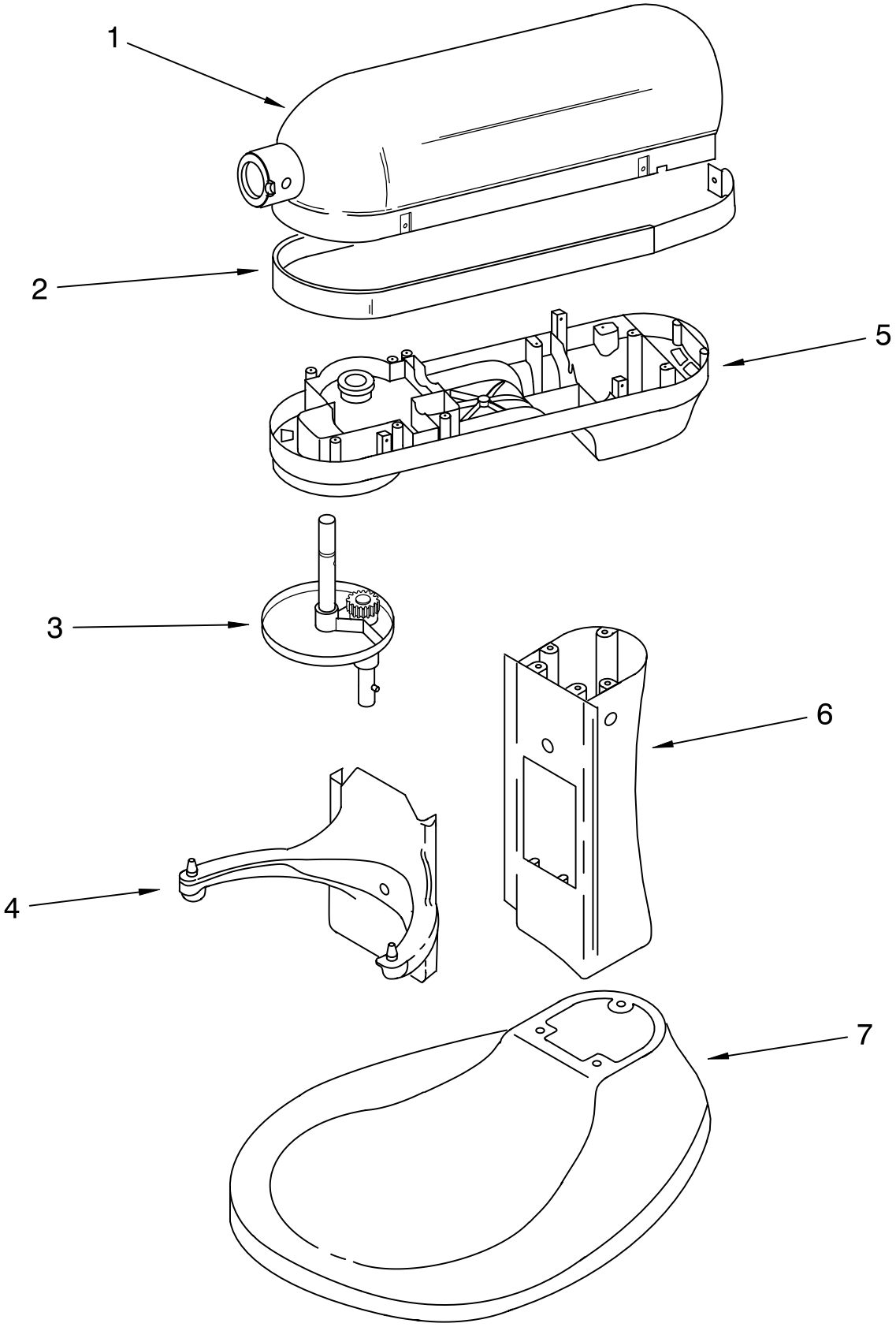

FOR ORDERING INFORMATION REFER TO PARTS PRICE LIST

8211764

COLOR VARIATION PARTS

For Models: KP26M1X_ _4, 4KP26M1X_ _4

Illus. No.	Part No.	DESCRIPTION
		Colors Subject To Change. Any Color Not Listed is No Longer Available. If Additional Colors Are Added, This Page Will Be Updated.
1		Motor Housing
	9708658	Meringue
	9708730	Blue Steel
	9708527	Cinnamon
	9708711	Dark Pewter
	9708677	Licorice
	9703433	Metallic Chrome
	9708749	Nickel Pearl
	9707981	Pearl Metallic
	9709131	Brass Pearl
	9709173	Bronze Pearl
	9709152	Copper Pearl
	9709321	Cayenne
	9709202	Silver Sage
	9709813	Seashell
	9709794	Azure Blue
2		Trim Band
	9708371	Platinum/Frost
3		Planetary
	9708662	Meringue
	9708734	Blue Steel
	9708531	Cinnamon
	9708715	Dark Pewter
	9708543	Licorice
	9708175	Metallic Chrome
	9708753	Nickel Pearl
	9707977	Pearl Metallic
	9709135	Brass Pearl
	9709177	Bronze Pearl
	9709156	Copper Pearl
	9709325	Cayenne
	9709206	Silver Sage
	9709817	Seashell
	9709798	Azure Blue
4		Bowl Support
	9708669	Meringue
	9708741	Blue Steel
	9709059	Cinnamon
	9708722	Dark Pewter
	9708688	Licorice
	9703397	Metallic Chrome
	9708760	Nickel Pearl
	9707970	Pearl Metallic
	9709142	Brass Pearl
	9709184	Bronze Pearl
	9709163	Copper Pearl
	9709332	Cayenne
	9709213	Silver Sage
	9709824	Seashell
	9709805	Azure Blue
5		Lower Gearcase
	9708665	Meringue
	9708737	Blue Steel
	9709073	Cinnamon
	9708718	Dark Pewter
	9708684	Licorice
	9706306	Metallic Chrome
	9708756	Nickel Pearl
	9707974	Pearl Metallic
	9709138	Brass Pearl
	9709180	Bronze Pearl
	9709159	Copper Pearl
	9709328	Cayenne
	9709209	Silver Sage
	9709820	Seashell
	9709801	Azure Blue
6		Column & Pin Asm
	9708672	Meringue
	9708744	Blue Steel
	9709062	Cinnamon
	9708725	Dark Pewter
	9708691	Licorice
	9703349	Metallic Chrome
	9708763	Nickel Pearl
	9707967	Pearl Metallic
	9709145	Brass Pearl
	9709187	Bronze Pearl
	9709166	Copper Pearl
	9709335	Cayenne
	9709216	Silver Sage
	9709827	Seashell
	9709808	Azure Blue
7		Base & Foot Assembly
	9708675	Meringue
	9708747	Blue Steel
	9709065	Cinnamon
	9708728	Dark Pewter
	9708694	Licorice
	9703346	Metallic Chrome
	9708766	Nickel Pearl
	9707964	Pearl Metallic
	9709148	Brass Pearl
	9709190	Bronze Pearl
	9709169	Copper Pearl
	9709338	Cayenne
	9709219	Silver Sage
	9709830	Seashell
	9709811	Azure Blue

CASE, GEARING AND PLANETARY UNIT

For Models: KP26M1X_ _4, 4KP26M1X_ _4

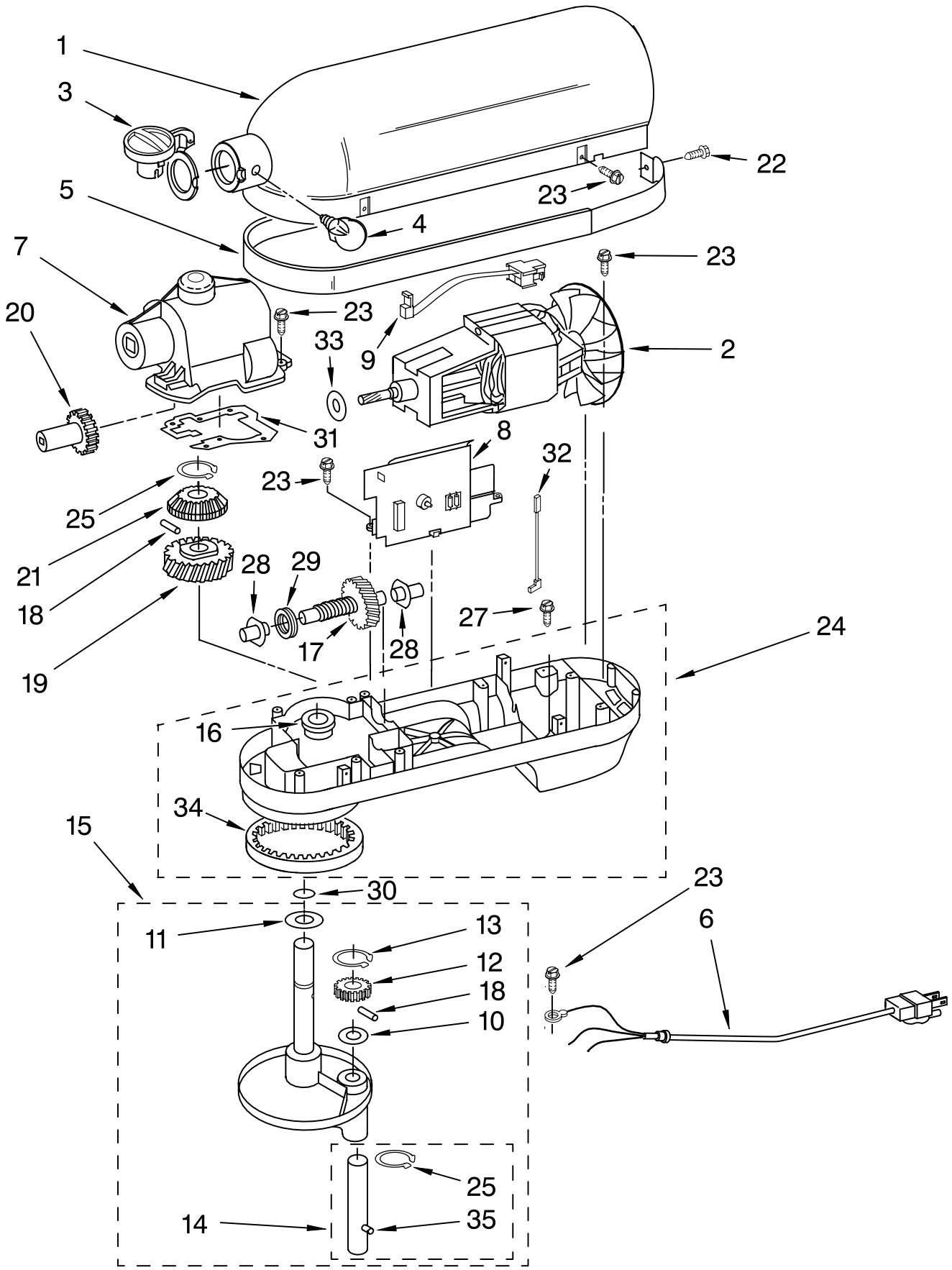

FOR ORDERING INFORMATION REFER TO PARTS PRICE LIST

CASE, GEARING AND PLANETARY UNIT

For Models: KP26M1X_ _4, 4KP26M1X_ _4

Illus. No.	Part No.	DESCRIPTION
1	**	Gearcase Motor Housing
2	9707507	Motor (10 Tooth)
3		Cap, Attachment Hub
	9707983	Pearl Nickel
4		Thumb Screw
	9709194	Black
	9709196	Grey
5	**	Band, Trim
6		Power Cord
	9706551	White
	9706552	Black
7	9703671	Transmission Housing
8		Control Assembly (Incl. Knob)
	9706648	Black Knob
	9706649	Gray Knob
9	9703312	Sensor, Hall Effect
10	9706090	Washer
11	9703434	Washer, Fiber
12	9707627	Gear, Pinion
13	9703438	Clip, Retaining
14	9708191	Shaft, Agitator
15	**	Planetary Assembly
16	16897	Bearing, Lower Center
17	9709231	Gear, Worm
18	9707223	Pin, Retaining
19	9706529	Gear, Worm Follower
20	9703338	Gear, Attachment Hub Bevel
21	9703337	Gear, Bevel
22	3400617	Screw
23	3400814	Screw
24	**	Lower Gear Case
25	9703680	Clip, Retaining
27	3400200	Screw
28		Bearing
	9703560	Front
	9703570	Rear
29	9703445	Bearing, Thrust
30	67500−55	"O" Ring
31	9707425	Gasket, Transmission Cover
32	9706036	Lead, Motor To Control
33	9706247	Seal, Motor Shaft
34	9703339	Gear, Internal
35	9704677	Pin, Groove

**Refer To Page 3
Color Variation Parts

BASE AND PEDESTAL UNIT

For Models: KP26M1X_ _4, 4KP26M1X_ _4

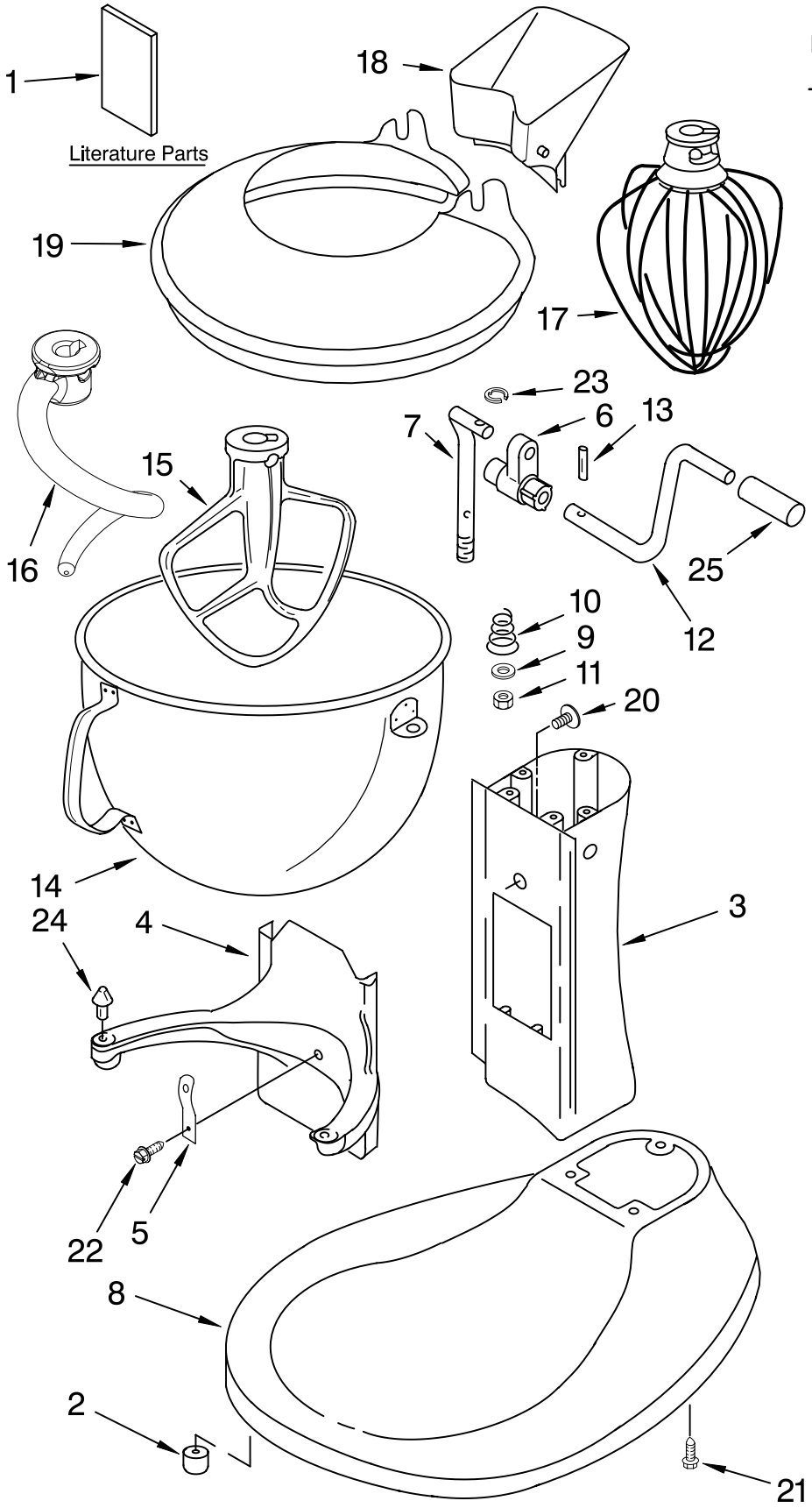

Illus. No.	Part No.	DESCRIPTION
1		Literature Parts
		Use & Care Guide
	9708307	U.S.
	9708308	Canada
	8211764	Repair Parts List
2	9708649	Foot, Rubber
3	**	Column Assembly
4	**	Bowl Support
5	9703474	Latch, Bowl Spring
6	9706885	Arm, Bowl Lift
7	9706787	Rod, Bowl Lift
8	**	Base And Foot Supports
9	9703439	Washer
10	9237	Spring
11	4159092	Nut
12	9706788	Handle, Bowl Lift
13	3400863	Screw
14	9703687	Bowl (6 Qt)
15	9703485	Beater, Flat
16	9703655	Hook, Dough
17	9703491	Whip, Wire
18	9703534	Spout, Pouring
19	9703533	Shield, Pouring
20	9703426	Cam, Adjusting
21	3400200	Screw
22	3400018	Screw
23	9703307	Clip
24	4162028	Pin, Bowl Locating
25	9703698	Handle

**Refer To Page 3
Color Variation Parts

FOR ORDERING INFORMATION REFER TO PARTS PRICE LIST

ACCESSORY PARTS

For Models: KP26M1X_ _4, 4KP26M1X_ _4

Illus. No.	Part No.	DESCRIPTION
	4164778	Mixer Attachment Pak (Includes Food Grinder (FG−A), Food Strainer (FVSP), And Vegetable Slicer, (RVS−A) (FPP−A)
	4164749	Food Grinder (FG−A)
	8211924	Grain Mill (KGMA)
	4164768	Pasta Maker And Food Grinder (Includes SNP Pasta Maker Plates) (SN/FG−A)
	4164775	Fruit/Vegetable Strainer Parts (Use With FG−A Model Only) (FVSP)
	4164750	Rotor Slicer/Shredder (With 4 Standard Cones) Fine Shredder, Coarse Shredder, Thick Slicer, And Thin Slicer (RVS−A)
	4164824	Pasta Maker Plates (SNP−A)
	4164774	Fruit/Vegetable Strainer And Food Grinder (FVS/FG−A)
	4162838	Food Tray (FT)
	4164748	Juicer (JE)
	4164747	Can Opener (CO)
	4164803	Sausage Stuffer Kit (SSA)
	9707963	Ice Cream Maker (KICAOWH0)
	4160588	Grease, Planetary