AIR FLOW AND CONTROL PARTS

For Model: AD25J1

DEHUMIDIFIER

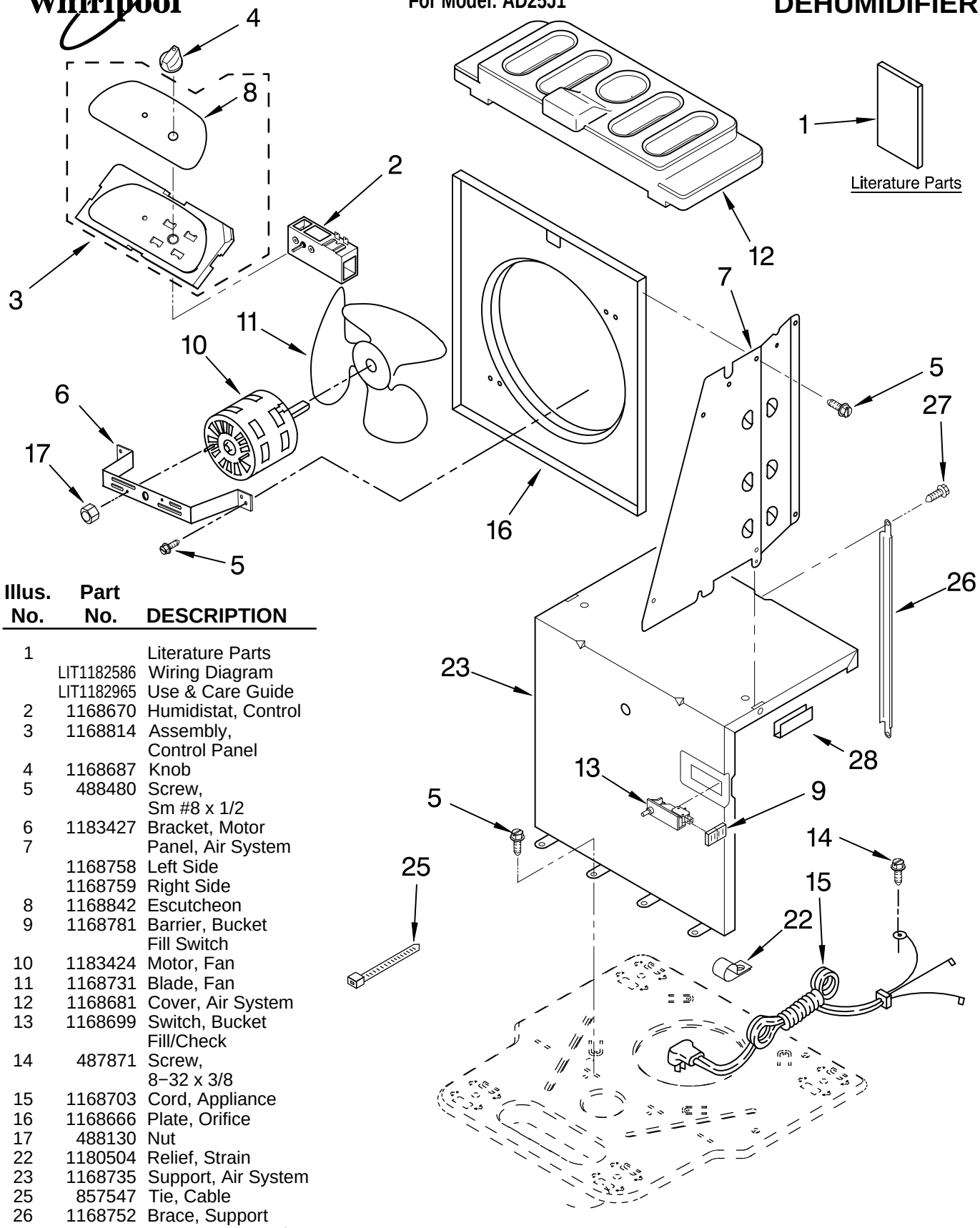

Illus. No.	Part No.	DESCRIPTION
1		Literature Parts
	LIT1182586	Wiring Diagram
	LIT1182965	Use & Care Guide
2	1168670	Humidistat, Control
3	1168814	Assembly, Control Panel
4	1168687	Knob
5	488480	Screw, Sm #8 x 1/2
6	1183427	Bracket, Motor
7		Panel, Air System
	1168758	Left Side
	1168759	Right Side
8	1168842	Escutcheon
9	1168781	Barrier, Bucket Fill Switch
10	1183424	Motor, Fan
11	1168731	Blade, Fan
12	1168681	Cover, Air System
13	1168699	Switch, Bucket Fill/Check
14	487871	Screw, 8−32 x 3/8
15	1168703	Cord, Appliance
16	1168666	Plate, Orifice
17	488130	Nut
22	1180504	Relief, Strain
23	1168735	Support, Air System
25	857547	Tie, Cable
26	1168752	Brace, Support
27	1157158	Screw, 8−18 X 3/8
28	1180634	Edge Guard

FOR ORDERING INFORMATION REFER TO PARTS PRICE LIST

UNIT PARTS

For Model: AD25J1

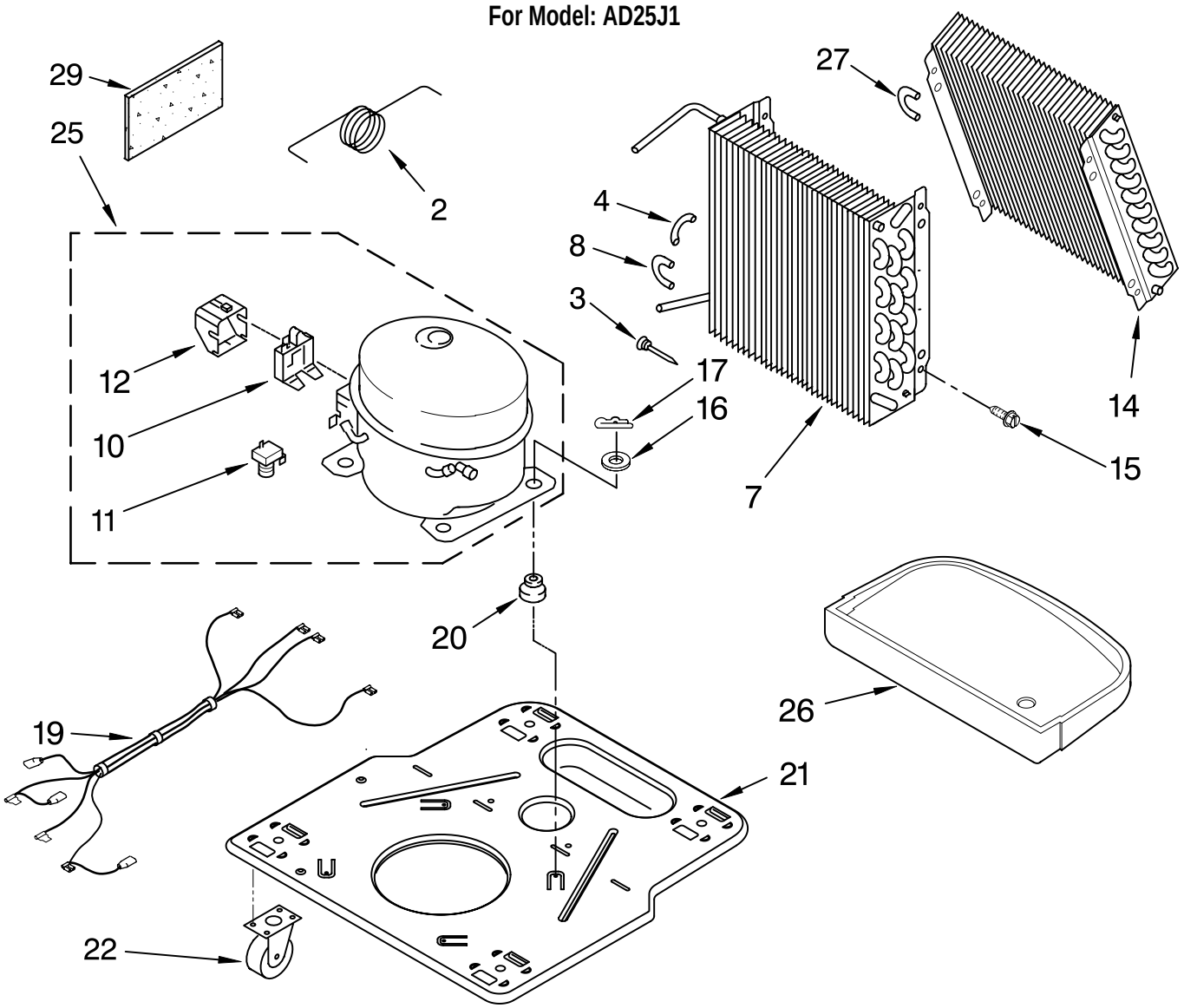

Illus. No.	Part No.	DESCRIPTION
2	1172076	Tube, Restrictor (Length 36.00")
3	1162526	Strainer
4	708532	Bend, Return (2)
7	1181854	Condenser
8	708531	Bend, Return (12)
10	1182782	Overload, Protector
11	950058	Relay, Start
12	1182781	Cover, Terminal

Illus. No.	Part No.	DESCRIPTION
14	1168726	Evaporator
15	488480	Screw, 8 x 1/2 (4)
16	680975	Washer
17	24364001	Clip, Compressor
19	1168810	Harness, Wire
20	1168722	Grommet (4)
21	1168654	Base
22	1164241	Caster (4)
25	1182778	Compressor, (Complete Assembly)

Illus. No.	Part No.	DESCRIPTION
26	1168761	Pan, Drain
27	854624	Bend, Return (9)
29	1162650	Insulation (Restrictor Tube)

REFRIGERANT CHARGE

6.75 oz.

Production Compressor Requires Production Electrical Components.
Service Compressor Requires Service Electrical Components.
For Further Information, Refer to Filmcard 19.1.

FOR ORDERING INFORMATION REFER TO PARTS PRICE LIST

CABINET PARTS

For Model: AD25J1

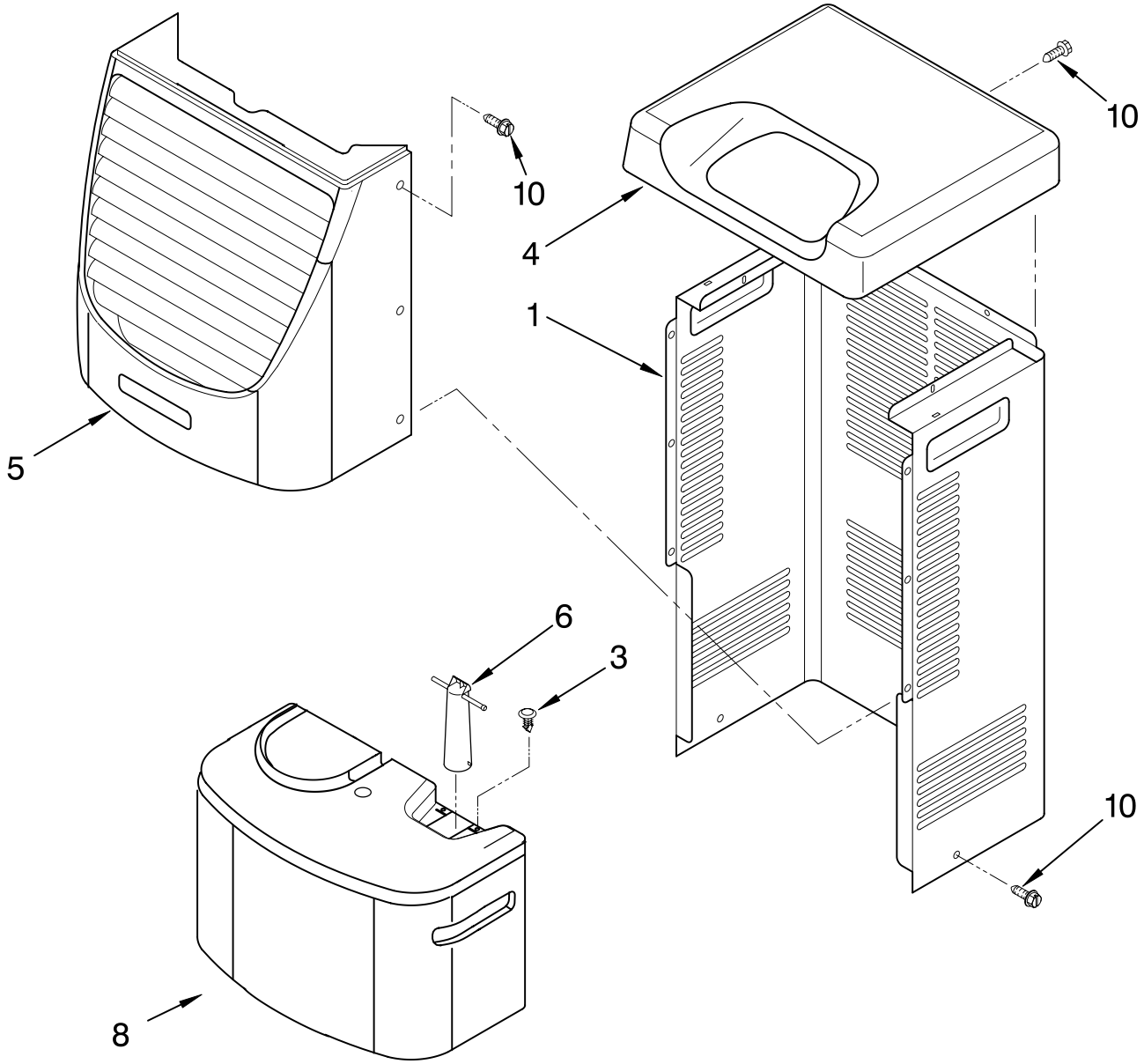

Illus. No.	Part No.	DESCRIPTION
1	1168667	Cabinet
3	1168762	Clip, Float
4	1168652	Cover, Top
5	1182600	Cover, Front
6	1172075	Float
8	1172079	Bucket, Condensate
10	1168744	Screw

Illus. No.	Part No.	DESCRIPTION
		Following Parts Not Illustrated and Optional Parts Not Included
	484310	Epoxy, Tube (Aluminum Repair)
	505168	Tape, No Drip Valve, Access
	978025	1/4" Tube O.D.
	978026	5/16" Tube O.D.

Illus. No.	Part No.	DESCRIPTION
	978027	3/8" Tube O.D.
	978028	1/2" Tube O.D.
	978029	5/8" Tube O.D.
	978030	3/4" Tube O.D.
	978865	Seal, Ring Access Valve (20 Pack)

FOR ORDERING INFORMATION REFER TO PARTS PRICE LIST