This Owner's Manual is provided and hosted by Appliance Factory Parts.

Appliance Factory Parts
Experts in BBQ, Humidifier, & Appliance Parts
1-800-955-7075

ESSICK N45W
Owner's Manual

Shop genuine replacement parts for ESSICK N45W

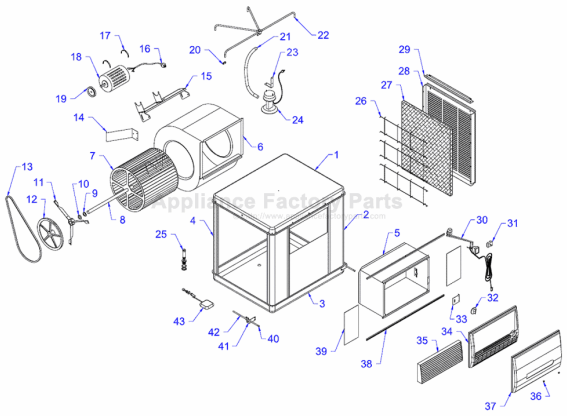

Find Your ESSICK Evaporative Cooler Parts - Select From 70 Models

-------- Manual continues below --------

ESSICKAIR
The Cool One

Owner's Manual

Model #'s

N35W

N45W

N49W

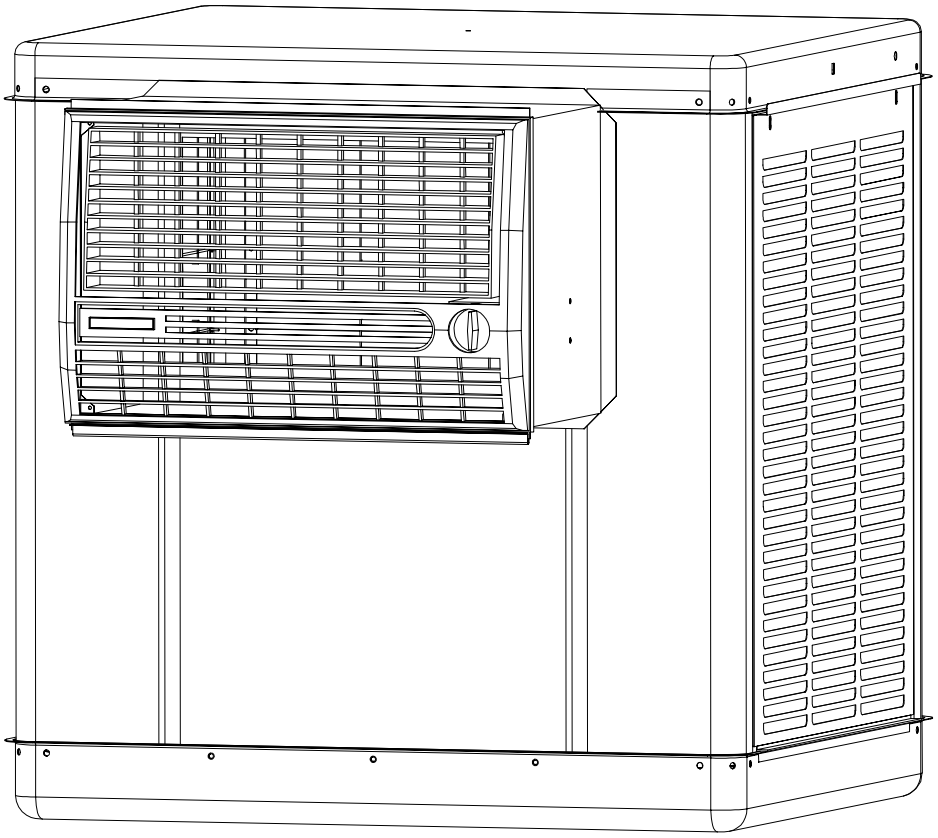

Read & Save This Instruction Manual!

Window Evaporative Air Cooler

Our Mission:

We Will Respond to Our Customers With High Quality Products and Service, While Eliminating Waste From Our Processes.

P/N 70733
REV 10/01

Evaporative Cooling

Evaporative cooling uses the principle of evaporation to lower the air temperature. Hot, dry air is passed through wetted filters and is converted to refreshingly cooled air. Essick Coolers make the best use of the evaporative process by controlling the flow of water, spreading the water evenly over the filters, and keeping a steady stream of cooled air entering your home. It is exhausted out open windows or doors, carrying heat, smoke and odors along with it. Essick evaporative coolers are 80% less costly to operate than refrigerated air conditioners.

Cautions: To prevent harm to yourself and others, and to avoid damage to your cooler, PLEASE follow these guidelines.

SAFETY GUIDE LINES & CAUTIONS		
When Installing	**When Operating**	**When Servicing**
Make sure that unit is installed on a sound structure that will support the full operating weight of the cooler. See page 4.	Make sure that circuit cooler is plugged into is equipped with a (slow blow) breaker large enough to support the full amperage of the cooler.	Always Unplug the cooler before attempting service of any kind.
Before attempting to hang the cooler in the window, remove the louvers to reduce weight.	To reduce the risk of fire or electrical shock, DO NOT use this fan with any Solid-state speed control device.	Be sure to disconnect unit from power source before servicing. If not, it can be turned on from inside the house and start unexpectedly.
Do Not connect power to cooler before installation is complete.	This cooler is equipped with an automatic thermally protected motor. If it shuts off on its own for any reason, it can restart without warning.	If the motor shuts off because of thermal overload, check into the problem immediately. If allowed to continue, permanent damage will occur.

MOUNTING

To install this cooler, the following tools are required:

- Adjustable wrenches
- Screwdrivers
- Electric drill
- 3/16” drill bit
- Level

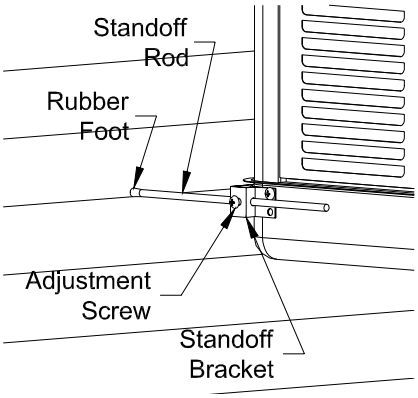

1. Loosen the Adjustment Screw in the Stand-Off Bracket. Remove the Spacer-Rod from the installation package and insert them into the Stand-Off brackets as shown.

2. Cut the Side Sealer Channels so that two of them will span the window when butted together. Place two of the channels on the bottom duct flange as shown.

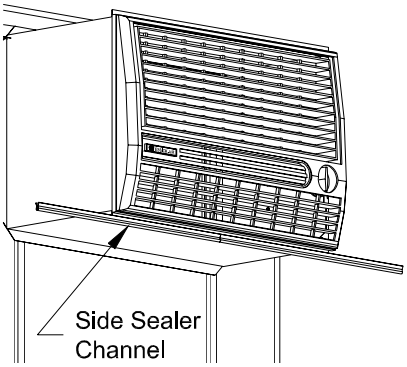

3. Place the Cooler in the center of the window with the bottom duct flange resting against the sill.

4. Pull out the Spacer-Rods so as to allow the Rubber Feet to rest against the side of the house. Tighten the Adjustment Screws.

5. Lower the window to rest on top of the duct behind the top duct flange.

6. Fasten a stop above the inside window sash to prevent the window from being raised. Raising the window may cause the cooler to fall.

7. Adjust the Spacer-Rods to level the cooler. This will ensure proper water flow to the pads.

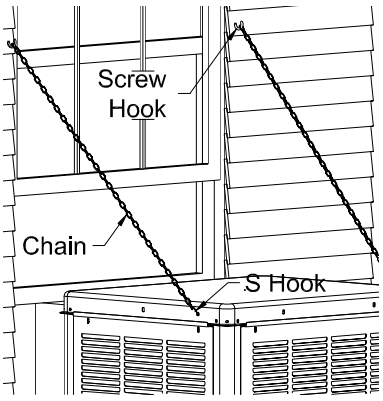

8. Install the Chain Supports.
   a. Drill pilot holes in the window frame, 3 feet above the top of the duct and the width of the cooler apart. Install the Screw-Hooks in these pilot holes to the full depth of the thread.
   b. Hook one end of each Chain over each Screw-Hook.
   c. Place S-Hooks in the in the holes at the top-rear of the cooler.
   d. Place the opposite end of the S-Hooks in the free end of each Chain. Make sure the chains are taut, but not so tight they pull the bottom of the cooler away from the wall.

9. Install the Side Sealer Panels. These panels are the correct height, but need to be trimmed to fit the width of your window. Trim the panels so that they reach from the window frame to the side of the duct. Slide the panels in the channels you placed on the bottom duct flange. Install the remaining Side-Sealer Channels over the top duct flange and the Side-Sealer Panels.

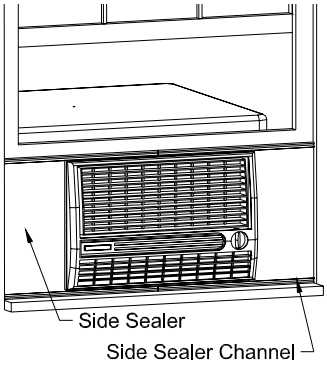

INSTALL OVERFLOW AND DRAIN

1. Slide the Rubber Washer over the Drain Bushing and push through the hole in the bottom of the cooler from the top side.

2. Secure the Drain Bushing from beneath the pan with the Lock Nut. Make sure the Rubber Washer does not twist while tightening, which could cause it to leak. **DO NOT OVERTIGHTEN.**

3. Thread the Overflow Tube into the Drain Bushing and **HAND TIGHTEN**.

4. If leakage occurs after Reservoir is full, retighten the Overflow Pipe until leaking stops. A small amount of silicone caulk may be used if necessary.

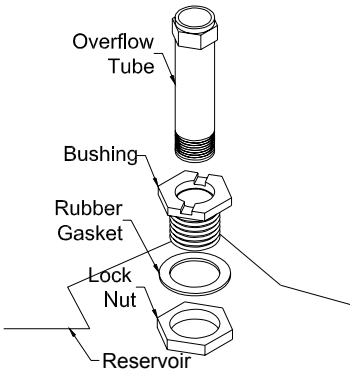

FLOAT VALVE INSTALLATION

1. Place the threaded portion of the Float Valve through the hole provided in the Corner Post from the inside.

2. Slip the Fiber Washer over the threaded portion outside the corner post and secure with the Nut. Be sure the Float does not turn while you are tightening the Nut.

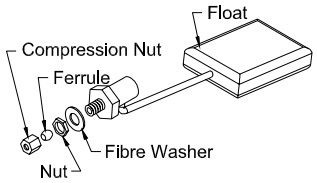

WATER LINE CONNECTION

Find the closest outside water faucet, and install a Water Connection Kit (not included with cooler) as shown. If an exterior faucet is not available, locate the closest cold water pipe and install a saddle valve assembly.

Route tubing to cooler. Place Compression Nut and Ferrule over end of tubing. Insert the tubing into float valve and tighten Compression Nut to secure. **NOTE:** Over tightening a compression fitting will cause that fitting to leak. It is best to secure the connections, turn on the water, and then snug the fitting until leaking stops.

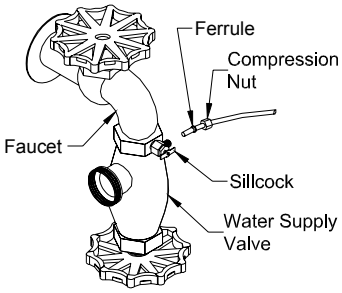

ADJUSTING WATER LEVEL AND FLOAT VALVE

- To adjust water level, bend the float valve rod.
- Check all water connections for leaks.
- Make sure the Float Valve cuts off completely when the desired water level has been reached (½" to ¾" below top of Overflow Tube). If the float does not stop the water completely, the water level will rise and run out the Overflow Tube.
- Double check the Overflow Tube for leaks.

START UP

1. Plug in the electrical cord to a standard grounded receptacle. Be sure the Circuit Breaker protecting the receptacle is of sufficient size.
2. Open windows in rooms where you want cooling to be directed.
3. Turn the cooler to the High Fan position. Observe the amount of air being delivered. Note: on cool nights (or days) or when the humidity level is high, the fan positions may be used to for ventilation purposes.
4. Turn the cooler to the Low Fan position. This should significantly reduce the amount of air being delivered.
5. Turn the cooler to the Pump Only position. The pump should run and not the fan. Check to see that water is flowing from all three Water Trays.
6. Turn the cooler to the High Cool position. Check to see that all three Pads are wetting evenly with no dry patches. The Pads may take up to 20 minutes to wet fully. If the Pads have dry patches, you can adjust the level of each Water Tray by screws on each end.
7. Adjust window openings to achieve desired cooling level.

WIRING DIAGRAM

CAUTION: Always unplug cooler before opening or attempting service of any kind.

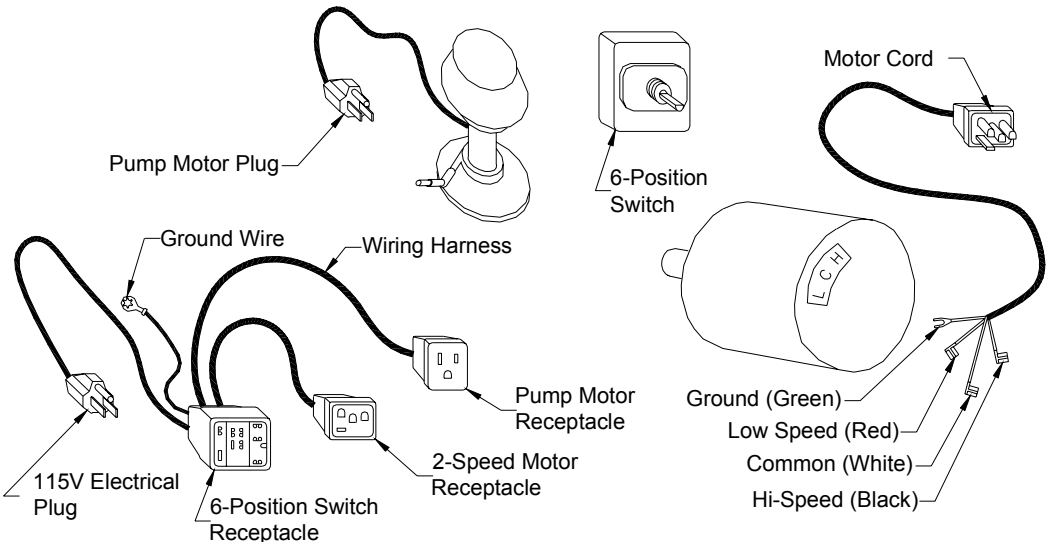

WARNING: To reduce the risk of fire or electric shock, do not use this fan with any solid-state speed control device.

COOLER SPECIFICATIONS

Model	Height	Width	Depth	Amps	Shipping Weight	Operating Weight
N49W	35”	34”	28”	9.1	155	210
N45W	35”	34”	28”	7.1	154	209
N35W	31”	32”	21”	7.1	122	207

TROUBLE SHOOTING

Problem	Cause	Remedy
Motor cycles on and off	• Excessive belt tension • Blower shaft not spinning freely • Extension cord (if one used) too long • Circuit breaker not large enough	• Adjust belt tension • Lubricate or replace bearings • Choose a shorter or heavier gauge cord • Consult a licensed electrician
Fails to start	• No electrical power • Circuit breaker tripped or fuse blown	• Check all electrical connections and cords • Reset circuit breaker or replace fuse
Water draining from overflow	• Float improperly adjusted	• Adjust float
Blower vibrates excessively	• Belt or pulley loose • Blower wheel out of balance or out of alignment • Debris in blower housing	• Adjust belt or tighten pulley • Replace the blower wheel • Clear debris
Not cooling	• Blocked water lines • Windows opened too little or too much. • Uneven pad wetting • Pump clogged or failed • Pads plugged with dirt and water deposits	• Check incoming water line, float and water distributor for blockages and clear. • Adjust window openings • Level water trays, check for blocked water slots in water trays • Clean pump or replace • Replace pads

This cooler is equipped with an automatic thermally protected motor. If it shuts off on its own for any reason, it can restart without warning.

MAINTENANCE

NOTE: This fan motor is thermally protected with an automatic reset and will automatically stop if overloaded. After the motor cools, it will restart automatically. If this occurs, check into the problem before permanent damage occurs.

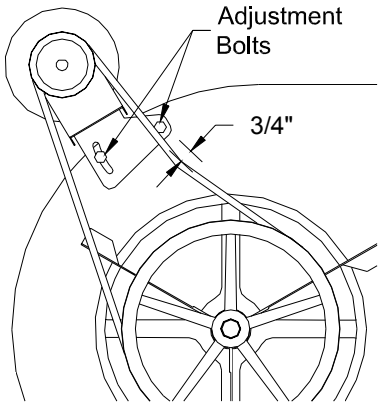

Once a month during cooling season, inspect your cooler for leaks, proper belt tension and alignment, blocked water lines and excessive residue build-up on the pads.

- To adjust belt tension, loosen the 4 Adjustment Bolts (2 each side) on the Motor Mount. Adjust belt tension so that 3 pounds of pressure (lightly push with one finger) will cause the belt to deflect ¾", as shown. Retighten the Adjustment Bolts.

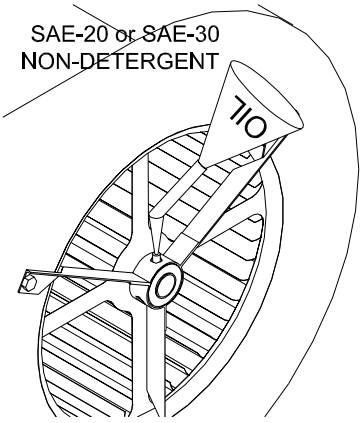

- Use SAE 20W or SAE 30W non-detergent oil to lube the bearings. Place 2 to 3 drops in the bearing oil cups at the beginning of the season and no more than once a season during cooling season. If the motor has oil holes (usually plugged with yellow caps that read "OIL" at either end of the motor) oil the motor also, following the same procedure as for bearings.

NOTE: Excessive oil in the bearings may leak out and be drawn into the air stream. Excessive oil in the motor may leak onto the motor windings and damage the motor.

- To replace pads
  1. Remove louver from cooler.
  2. Unhook pad holders and remove.
  3. Remove and discard old pad.
  4. Clean water deposits from the louver. If the paint is chipped or rust spots occur sand the spots and paint with a rust resistant exterior paint.
  5. Place new filter in louver and tuck in to prevent hot air from bypassing.
  6. Replace pad holders and hook into place.
  7. Replace louver in cooler.

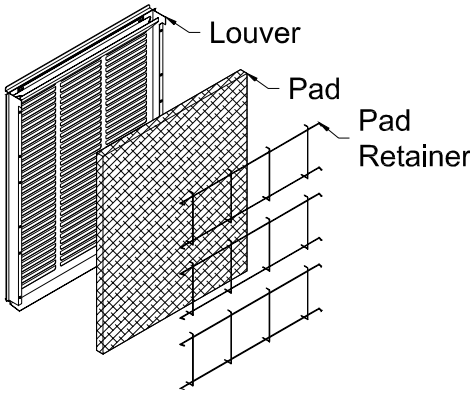

NOTE: It is best to replace filter pads <u>at the end of the season</u>. Old filter pads soak up lime and salts that can rust louvers and the cabinet during the wet, rainy winter months.

- At the end of the season
  1. Remove the Overflow Tube and let the water drain from the reservoir. (The bushing is threaded to accept a standard garden hose. If desired, a garden hose may be used to route water away from your house.) Replace the Overflow Tube when you start the cooler for the next season.
  2. Rinse dirt and debris from the pan and clean any water deposits that may have collected in the reservoir or on any interior surface of the cooler.
  3. If the paint is chipped or rust spots occur sand the spots and paint with a rust resistant exterior paint.

NOTE: Do not get water on the Fan Motor or Pump Motor. This will cause damage.

- If freezing weather occurs in your area, it is best to shut off the water supply at the source and drain the supply line to the cooler.
- A cooler cover is recommended to prevent rain and weather from damaging your cooler.
- To prevent the Shaft from rusting, coat with a wax based lubricant. Allow Lubricant to dry completely and all fumes to disperse before turning on the cooler.

Repair Parts

Item	N35W Part No.	N45W Part No.	N49W Part No.	Description
1	70735	70738	70738	Top
2	70737	70740	70740	Front
3	70736	70739	70739	Bottom
4	504242	504245	504245	Corner Post – Plain
4*	504243	504246	504246	Corner Post – W/Float Valve Hole
5	70808	70808	70808	Duct
6	70806	70744	70744	Blower Housing
7	30318	30322	30322	Blower Wheel
8	30241	30238-02	30238-02	Blower Shaft
9	501244	501241	501241	Fiber Washer
10	524330	524331	524331	Set Collar
11	30287	30289	30289	Bearing
12	583009	583091	583091	Blower Pulley
13	582093	582030	582030	Belt
14	504302	504289	504289	Blower Brace
15	515160	512574	512574	Motor Mount
16	595121	595121	595121	Motor Cord
17	524162	524162	524162	Motor Saddle Clamps
18	581188	581188	50310	Motor
19	31085	31085	300FP	Motor Pulley
20	524304	524304	524304	Water Tube Holder
21	598474	598474	598474	Water Hose
22	512551	512550	512550	Water Distributor
23	504281	504281	504281	Pump Bracket
24	506669	506669	506669	Pump
25	70613	70613	70613	Overflow Kit
26	504253	504254	504254	Pad Retainer (Side)
26	504255	504256	504256	Pad Retainer (Back)
27*	141N	120N	120N	Filter Set
27	516153	516157	516157	Filter (Side)
27*	516155	503314	503314	Filter (Back)
28	504258	504262	504262	Louver (Side)
28*	514260	504263	504263	Louver (Back)
29	504266	504267	504267	Water Tray (Side)
29*	504268	504269	504269	Water Tray (Back)
30	70655	70655	70655	Wiring Harness
31	524299	524299	524299	Switch
32	70664	70664	70664	Knob
33	70798	70798	70798	Switch Bracket
34	70658	70658	70658	Grill Frame
35	70741	70741	70741	Sub-Vent Assembly
36	70663	70663	70663	Grill Cover Retainer
37	70667	70667	70667	Grill Cover
38	70656	70656	70656	Side Sealer Channel
39	70618	70618	70618	Side Sealer
40	524344	524344	524344	Rubber Foot
41	504341	504341	504341	Spacer Rod
42	504337	504337	504337	Stand-Off Bracket
43	502389	502389	502389	Float
44*	70804	70804	70804	Duct Mount Strip

*** Item not shown**

Repair Parts
Window Type Evaporative Air Cooler
Models: N35W, N45W, N49W

Repuestos
Enfriador Evaporativo de Ventana
Modelos: N35W, N45W, N49W

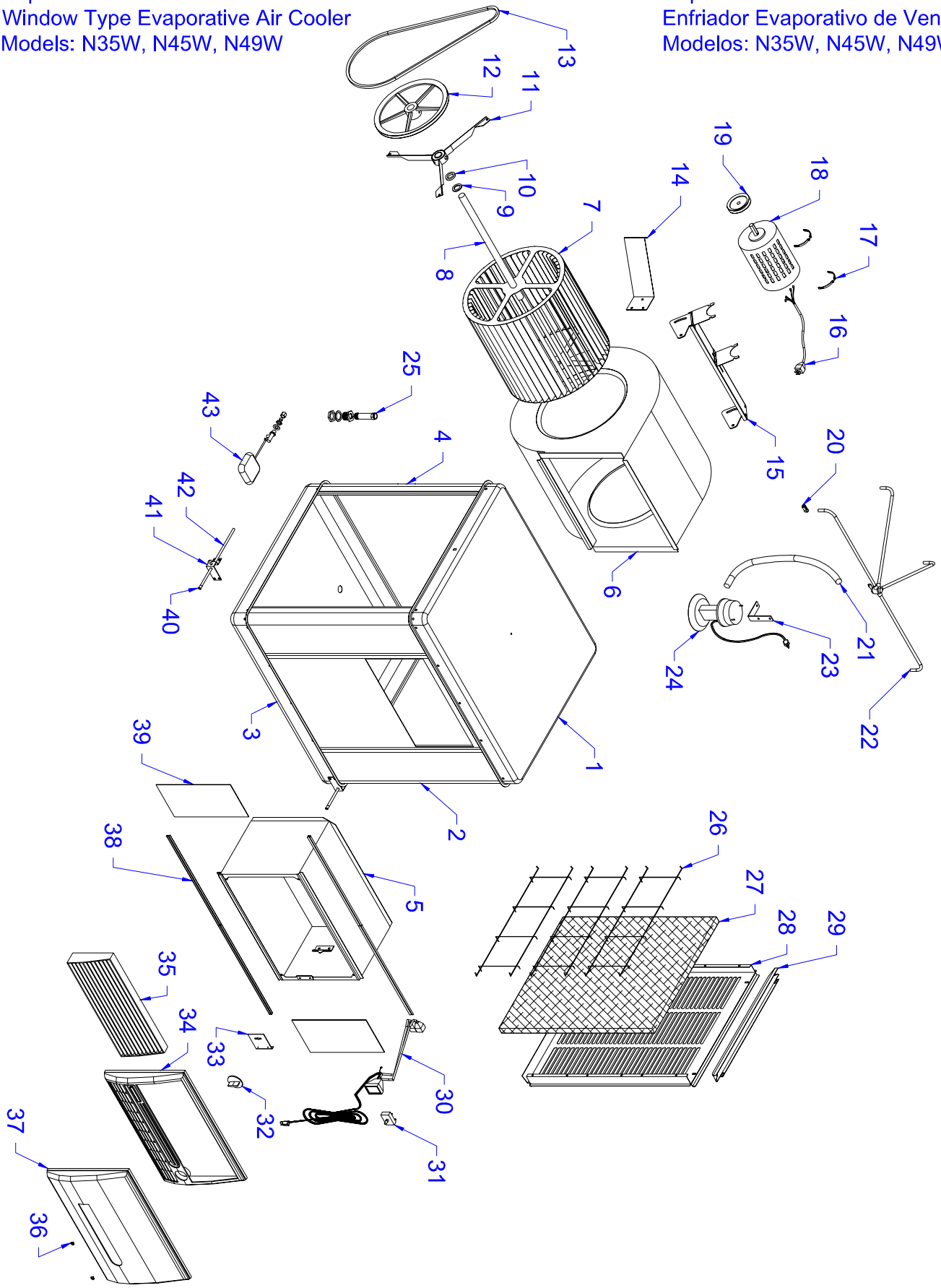

Instructions to Convert Unit to Vertical Duct Configuration

1. Remove the 13 screws holding the Duct in place.
2. Replace the 4 screws removed from the Top Pan.
3. Turn the Duct 90 degrees counter-clockwise. Be careful not to unplug the switch from the wiring harness.
4. Align the Duct with the 3 holes at the top of the Front Panel (just below the Top Pan).
5. Insert 3 screws at the top and bottom of the duct.
6. Place the Duct Mount Strips (found in bottom of cooler) over the side Duct Flanges and insert screws 3 each side into

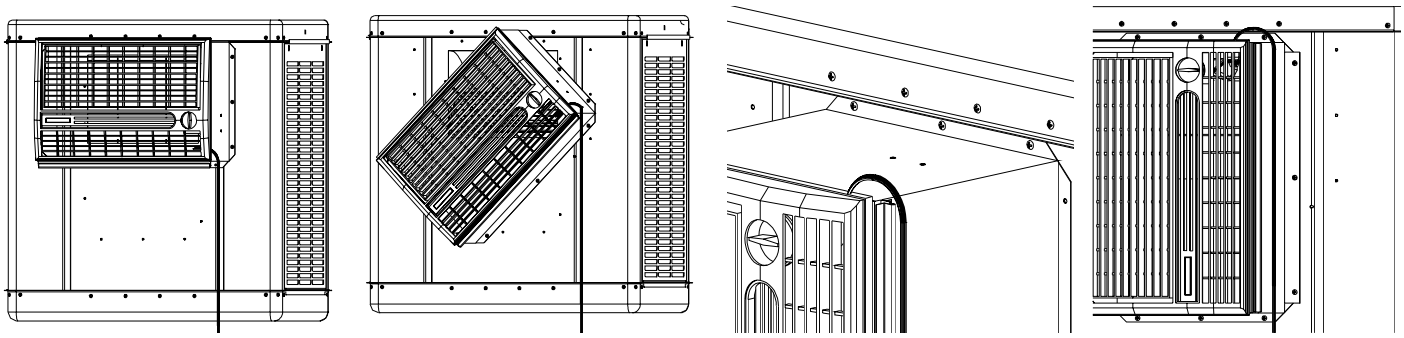

the holes provided (3 screws will be in installation kit).

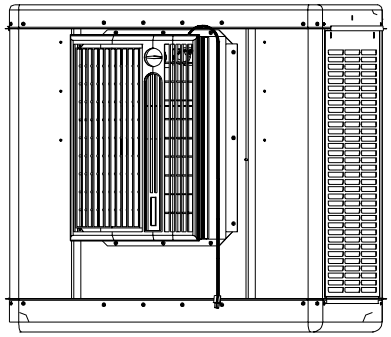

Proceed with the installation as normal. The Side Sealer Channels will go on the same flanges as for a horizontal duct. You may use the Side Sealers provided to close off the window above your cooler's duct.

LIMITED WARRANTY

This warranty is extended to the original purchaser only. It does not cover damages incurred during shipping or through accident, neglect, or abuse by the owner. Essick Air Products does not authorize any person or representative to assume any other or different liability in connection with this cooler.

TERMS AND CONDITIONS OF WARRANTY
The **BOTTOM PAN** is guaranteed against leakage due to rusting out for **Five Years**. All other original parts provided by Essick Air Products are warranted against defects in material or factory workmanship for One Year.

EXCLUSIONS FROM THE WARANTY
Essick Air Products is not responsible for incidental or consequential damage resulting from any malfunction.

Essick Air Products is not responsible for any damage occurring from the use of water softeners, chemicals, descale material, or if a higher horsepower motor than what Essick Air Products recommends is used in the unit.

Essick Air Products is not responsible for the cost of service calls to diagnose cause of trouble, or labor charge to repair and/or replace parts.

HOW TO OBTAIN SERVICE UNDER THIS WARRANTY
Contact the Dealer where you purchased the evaporative cooler. If for any reason you are not satisfied with the response for the Dealer, contact Customer Service Department: Essick Air Products Inc. 5800 Murray Street, Little Rock, Arkansas 72209. 1-800-643-8341.