This Owner's Manual is provided and hosted by Appliance Factory Parts.

Appliance Factory Parts
Experts in BBQ, Humidifier, & Appliance Parts
1-800-955-7075

MASTERCOOL FAD242W8 Owner's Manual

Shop genuine replacement parts for MASTERCOOL FAD242W8

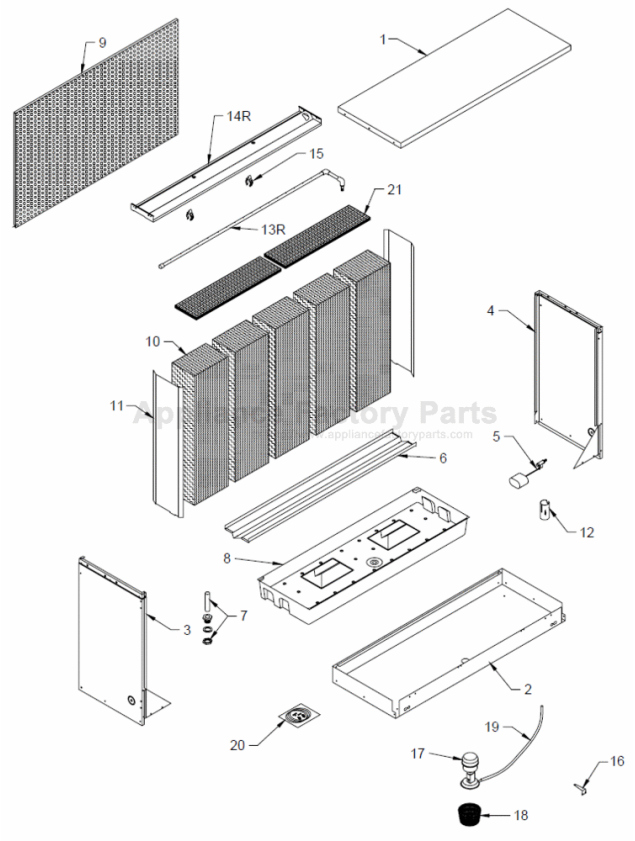

Find Your MASTERCOOL Evaporative Cooler Parts - Select From 135 Models

-------- Manual continues below --------

HIGH CAPACITY AXIAL FAN

EVAPORATIVE COOLER MODELS: FAD242 & FAD248

UL LISTED

- Heavy-duty cast iron pillow block ball bearings for fan blade
- Heavy-gauge galvanized steel cabinet with powder paint protection
- GFCI protected pump circuit
- Belt tension with screw adjustment
- AMCA Performance Licensed
- Bolted cabinet for easy parts replacemen
- Plastic reservoir and media shields protect cabinet from water
- Fine grid intake grille prevents evaporative media plugging
- Long-life rigid evaporative media
- More air delivery per horsepower than centrifugal blower type units

EXTREME COOLING FOR INDUSTRIAL USES

BOTTOM VIEW FRONT VIEW END VIEW

Match the letter on the diagrams above to their correlating letter in the table below.

Cooler Dimensions (in inches)

Blower Model Number	Cabinet			Duct Opening		Duct Location		Drain Location		Wet Module	Bottom Pan Riser	Media Dimensions		Water Service		Electric Service		Approx. Total Reservoir Capacity	Appr Weight
	H	W	D	A	B	C	P	F	G	J	U	X	Y	L	M	S	T		Dry
FAD 242	40 1/8	97 1/4	60 1/4	46	46	7 1/8	7 1/8	30 1/8	12 1/2	18 1/2	6	60	34 1/2	5 7/8	14 5/8	48 5/8	4 3/4	30 GAL.	706
FAD 248	50 1/8	97 1/4	60 1/4	52	52	4 1/8	4 1/8	30 1/8	12 1/2	18 1/2	6	60	44 1/2	5 7/8	14 5/8	48 5/8	14 3/4	30 GAL.	732

Certified Air Delivery

Performance at 0.1" Increments of External Pressure

Model	BHP	Fan RPM	Motor P/N	Cooler Voltage	Phase	Fan Motor Amps†	120V/ 60Hz/ 1 Ph Total Pump Amps*	0"	0.1"	0
								CFM	CFM	C
FAD242B111	1	451	110457	120	1	16	2.4	13906	11869	7
FAD242B112			110457	280/230	1	8.8/8				
FAD242B132			110462-1	208/230	3	4.6/4.2				
FAD242B134			110462-1	460	3	2.1				
FAD242B211	2	580	110483	120	1	24	2.4	17550	15973	14
FAD242B212			110483	208/230	1	13.2/12				
FAD242B232			110464-1	208/230	3	7.5/6.8				
FAD242B234			110464-1	460	3	3.4				
FAD248B211	2	608	110483	120	1	24	2.4	21096	19563	18
FAD248B212			110483	208/230	1	13.2/12				
FAD248B232			110464-1	208/230	3	7.5/6.8				
FAD248B234			110464-1	460	3	3.4				

Performance shown is for installation type A - Free inlet, Free outlet. Performance rating includes the effects of the evaporative media in the ai
Power rating (BHP) does not include drive losses.

†Amperage shown is from the National Electrical Code. Use amperage shown on motor nameplate to determine motor protector. All external w andcomponents such as disconnects, motor starters, and over-current protection are to be field supplies and are not included as part of the evap cooler.

*A separate 120V, 60 Hz. 1-phase pump electric circuit is required to maintain the integrity of the GFCI pump protection and to maintain the U listing of the evaporative cooler. Pump amperage shown is the total of 2 pumps per cooler.

UL Listed. Model FAD242B and FAD248B series coolers are U.L. listed for non-ducted installations.

MasterCool® by Champion Cooler certifies that the evaporative coolers shown here are licensed to bear the AMCA Seal. The ratings shown are based on tests and procedures performed in accordance with AMCA Publication 211 and comply with the requirements of the Certified Ratings Program.