This Owner's Manual is provided and hosted by Appliance Factory Parts.

Appliance Factory Parts
Experts in BBQ, Humidifier, & Appliance Parts
1-800-955-7075

Alfresco ALX2-30C Owner's Manual

Shop genuine replacement parts for Alfresco ALX2-30C

Find Your Alfresco Grill Parts - Select From 126 Models

-------- Manual continues below --------

Alfresco™

Open Air Culinary Systems

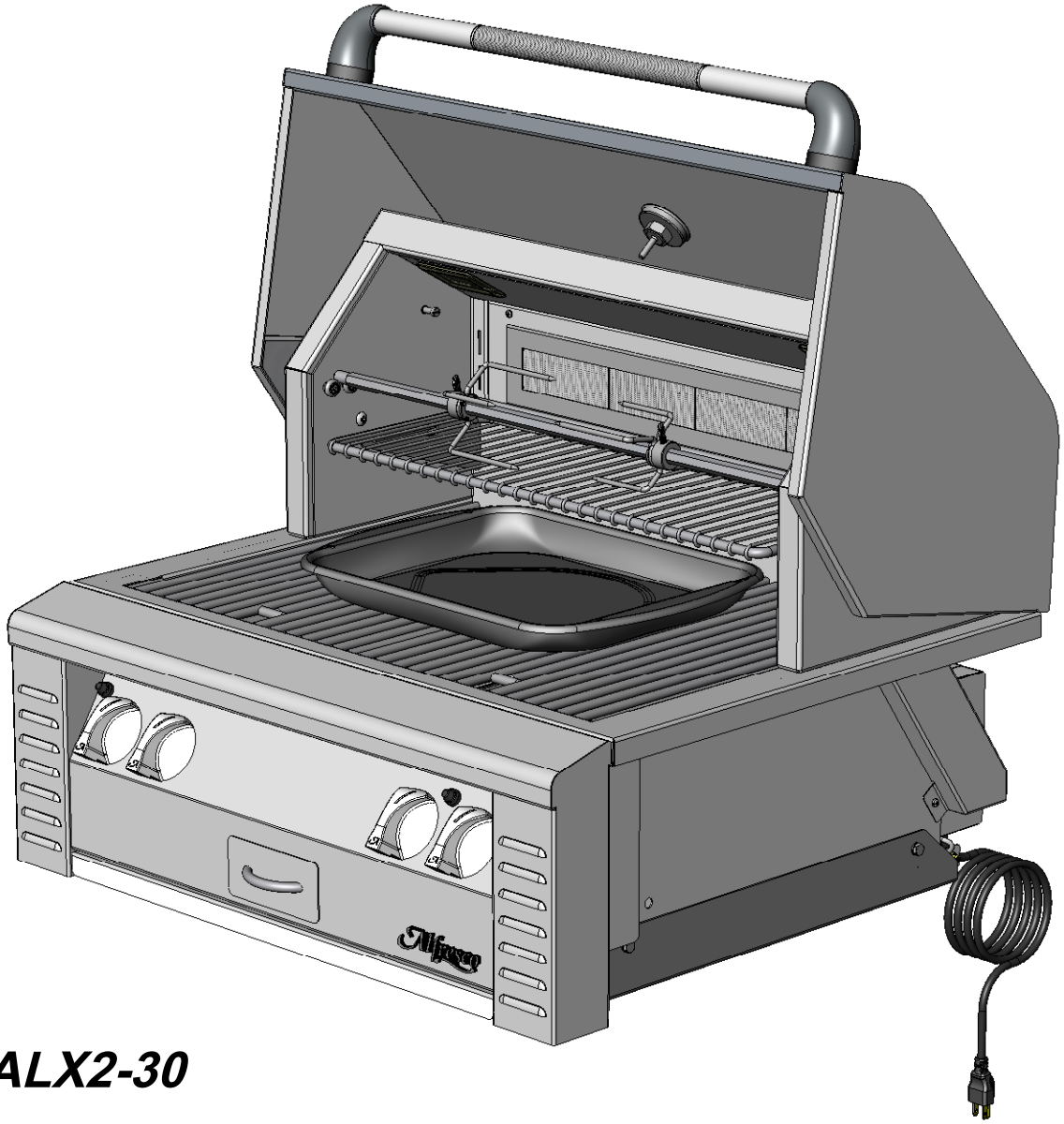

ALX2-30

BUILT-IN 30" BBQ GRILL WITH DUAL BURNERS

INTEGRATED ROTISSERIE MOTOR AND LIGHTS

Alfresco™
SUPERIOR EQUIPMENT SOLUTIONS
7039 EAST SLAUSON AVENUE
COMMERCE, CA. 90040

THE INFORMATION CONTAINED IN THIS DRAWING IS THE SOLE PROPERTY OF SUPERIOR EQUIPMENT SOLUTIONS INC. ANY REPRODUCTION IN PART OR AS A WHOLE WITHOUT WRITTEN PERMISSION FROM SUPERIOR EQUIPMENT SOLUTIONS, INC. IS PROHIBITED.

DRAWN BY: ADRIAN CRISCI
CREATED: 10/16/2006 3:40:31 PM

PROJECT TITLE: **ALX2-30 BBQ**

DRAWING TITLE: **ALX2-30**

DRAWING NO.: **500-0017 MANU**

SHEET 1 O

BILL OF MATERIAL

NO.	PART NUMBER	DESCRIPTION
1	100-1065	FIREBOX COVER
2	100-1074	DUAL VLV FWALL COVE 4 U BURNER
3	100-1080	FRONT PANEL - 30" BBQ
4	100-1083	U-BURNER BACK WALL BRACKET
5	100-1093	ROTISSERIE CHAIN COVER
6	100-1109	U BURNER FIREWALL COVER
7	100-1132	BRIQUETTE TRAY
8	100-1211	ALX2-30 FIREWALL (NEW IGNITER MOUNT)
9	210-0189	ELECTRODE - "L" SHAPED - MAIN BURNER
10	265-0005	BRIQUETTES - ALFRESCO CERAMIC (SET OF 24 PCS)
11	290-0031	LOGO - ALFRESCO
12	290-0038	BURNER - GRILL - "U" SHAPE
13	290-0059	ROTISSERIE DRIP PAN
14	290-0096	FORK ASSEMBLY
15	290-0116	CHAIN - ANSI # 25 - ¼" PITCH - .13" Ø X 1/8" ROLLER
16	290-0123	SPEAR - ROTISSERIE - 30" - 2006 BBQ
17	290-0124	GRILL 30" BBQ - 12¾" WIDE - SS
18	510-0127	30" BBQ - FIRE BOX ASSEMBLY
19	510-0130	30" BBQ - GREASE TRAY ASSEMBLY
20	510-0132	30" BBQ - GAS MANIFOLD DUAL "U" BURNER
21	510-0134	SMOKER BURNER ASSEMBLY
22	510-0136	30" BBQ FRONT ASSEMBLY
23	510-0137	SMOKER TRAY ASSEMBLY
24	510-0145	WARMING RACK - 30" BBQ
25	510-0146	30" BACK HOOD WITH RIM ASSEMBLY
26	510-0188	ALX2 - IGNITER PLATE - RIGHT
27	510-0194	ALX2-30 FRONT HOOD - MAIN ASSEMBLY
28	510-0204	ALX2-30 ELECTRICAL COMPONENTS

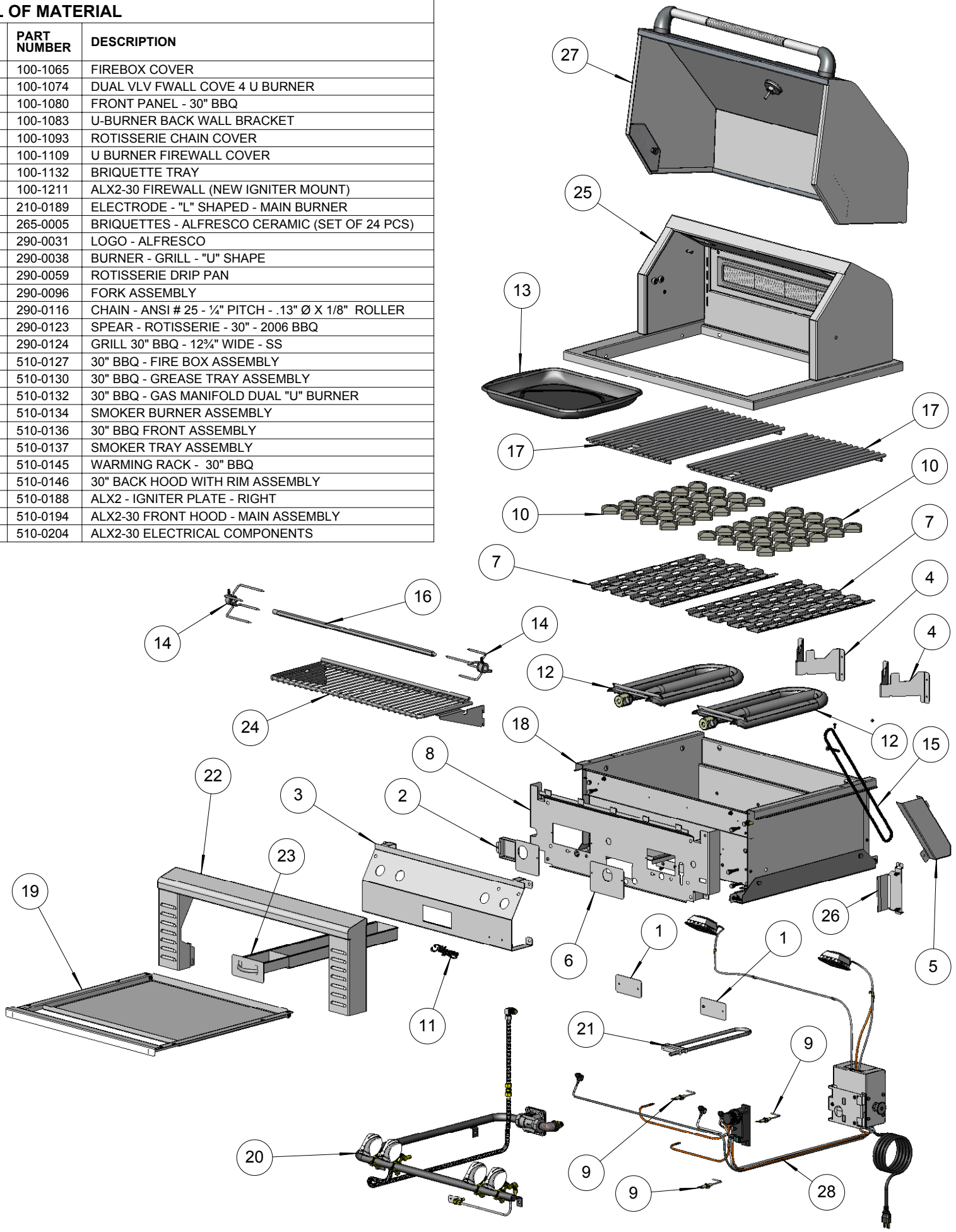

Alfresco™
SUPERIOR EQUIPMENT SOLUTIONS
7039 EAST SLAUSON AVENUE
COMMERCE, CA. 90040

THE INFORMATION CONTAINED IN THIS DRAWING IS THE SOLE PROPERTY OF SUPERIOR EQUIPMENT SOLUTIONS INC. ANY REPRODUCTION IN PART OR AS A WHOLE WITHOUT WRITTEN PERMISSION FROM SUPERIOR EQUIPMENT SOLUTIONS, INC. IS PROHIBITED.

DRAWN BY: ADRIAN CRISCI
CREATED: 10/17/2006 3:50:25 PM

PROJECT TITLE:
ALX2-30 BBQ

DRAWING TITLE:
ALX2-30

DRAWING NO.:
500-0017 MANUA

SHEET 1 O

BILL OF MATERIAL

NO.	PART NUMBER	DESCRIPTION	QTY.
1	200-0087	1/4" LOCK WASHER	8
2	200-0089	1/4-20 X 1/2 - HEX HEAD BOLT	8
3	510-0128	BBQ TRAY SUPPORT ASSY - RIGHT SIDE	1
4	510-0129	BBQ TRAY SUPPORT ASSY - LEFT SIDE	1
5	510-0205	ALX2-30 FIREBOX - WELDED PARTS	1

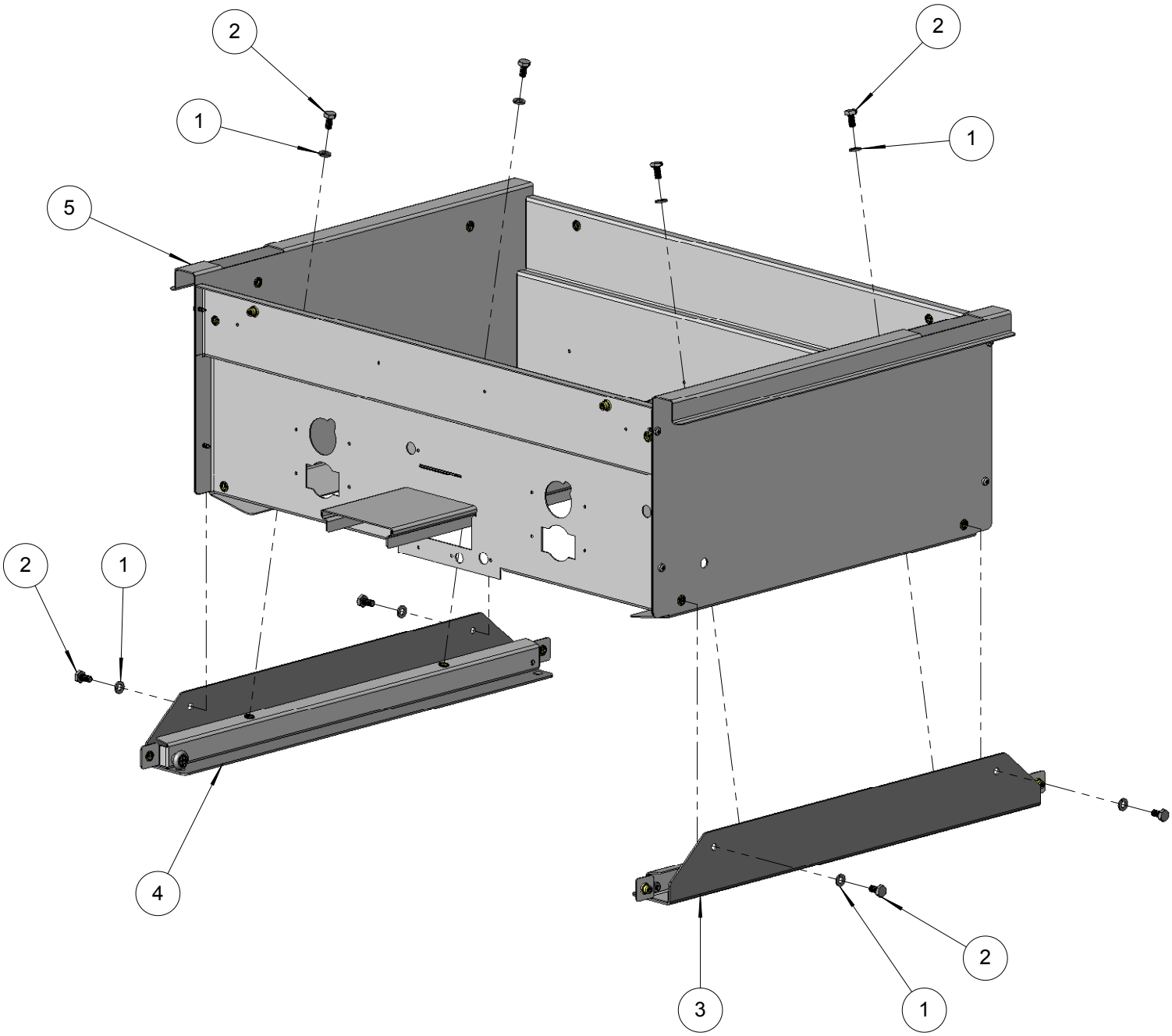

Alfresco™
SUPERIOR EQUIPMENT SOLUTIONS
7039 EAST SLAUSON AVENUE
COMMERCE, CA. 90040

THE INFORMATION CONTAINED IN THIS DRAWING IS THE SOLE PROPERTY OF SUPERIOR EQUIPMENT SOLUTIONS INC. ANY REPRODUCTION IN PART OR AS A WHOLE WITHOUT WRITTEN PERMISSION FROM SUPERIOR EQUIPMENT SOLUTIONS, INC. IS PROHIBITED.

DRAWN BY: ADRIAN CRISCI
CREATED: 10/18/2006 9:13:47 AM

PROJECT TITLE:
ALX2-30 BBQ

DRAWING TITLE:
30" BBQ - FIRE BOX ASSEMBLY

DRAWING NO.:
510-0127 MANU

SHEET 1 O

BILL OF MATERIAL

NO.	PART NUMBER	DESCRIPTION	QTY.
1	200-0073	10-32 - HEX NUT	2
2	200-0075	# 10 LOCK WASHER	2
3	200-0148	SCREW 10-32 X 3/4" - FLAT HEAD - PHILIPS - 82° - SS	2
4	290-0119	ROLLER WHEEL - STAINLESS STL - ¾" Ø -	2
5	510-0206	ALX2-30 GREASE TRAY - WELDED PARTS	1

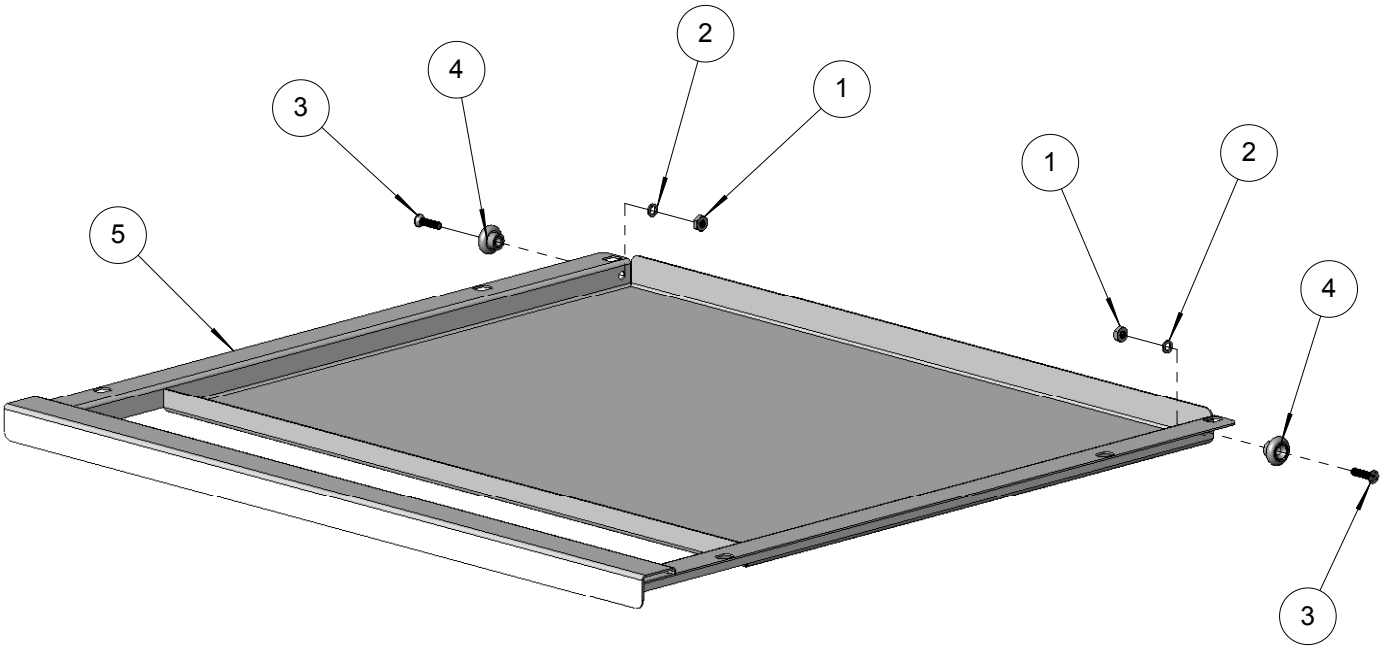

Alfresco™
SUPERIOR EQUIPMENT SOLUTIONS
7039 EAST SLAUSON AVENUE
COMMERCE, CA. 90040

THE INFORMATION CONTAINED IN THIS DRAWING IS THE SOLE PROPERTY OF SUPERIOR EQUIPMENT SOLUTIONS INC. ANY REPRODUCTION IN PART OR AS A WHOLE WITHOUT WRITTEN PERMISSION FROM SUPERIOR EQUIPMENT SOLUTIONS, INC. IS PROHIBITED.

DRAWN BY: ADRIAN CRISCI
CREATED: 10/18/2006 11:04:19 AM

PROJECT TITLE:
ALX2-30 BBQ

DRAWING TITLE:
30" BBQ - GREASE TRAY ASSEMBLY

DRAWING NO.:
510-0130 MANU

SHEET 1 O

BILL OF MATERIAL

NO.	PART NUMBER	DESCRIPTION	QTY.
1	100-0913	30" & 56" BFG BBQ SMOKER GAS LINE	1
2	100-0914	ROTISSERIE GAS LINE (42"L x 3/8" Ø - SS. FLEX TUBE)	1
3	100-0917	ROTISSERIE GAS LINE EXTENSION - 3/8"Ø X 8" - SS	1
4	100-1067	SMOKER & SZ™ ORIFICE BRACKET	1
5	200-0274	ELBOW 90°- CAST IRON - 1/2" FPT x 1/2" MPT	1
6	220-0151	COUPLING 3/8" x 3/8" - COMPRESSION - BRASS	1
7	220-0273	ELBOW 90° - 1/8" FPT x 3/16" COMP	2
8	220-0275	NIPPLE - 1/2" MPT X 3/8" MPT	1
9	220-0276	ELBOW 3/8" MPT x 1/8" FPT x 3/8" COMP	1
10	220-0277	NIPPLE 1/8"MPT x 1/16"MPT	1
11	220-0280	REGULATOR GAS - MAXITROL RV48CL440002	1
12	220-0321	MANIFOLD - 30" BBQ - 2006 MODEL	1
13	290-0030	KNOB BBQ - ALFRESCO "A" LETTER	4
14	290-0041	GAS VALVE - STRAIGHT - WITHOUT ORIFICES	1
15	290-0066	GAS VALVE - ANGLED - ORIFICE: INT= 0.95 mm / EXT=NONE	1
16	SEE NOTE	GAS VALVE - ANGLED WITH ORIFICE >>> SEE NOTE	2
17	SEE NOTE	ORIFICE - IR ROTISSERIE UNIT >>> SEE NOTE	1
18	SEE NOTE	ORIFICE - SMOKER UNIT >>> SEE NOTE	1

NOTE: ORIFICE OR VALVE TO CHANGE ACCORDING TO GAS SUPPLY. (NG OR LP)

ITEM N°	NG PART N°	LP PART N°
16	290-0064	290-0065
17	220-0283	220-0284
18	220-0287	220-0288

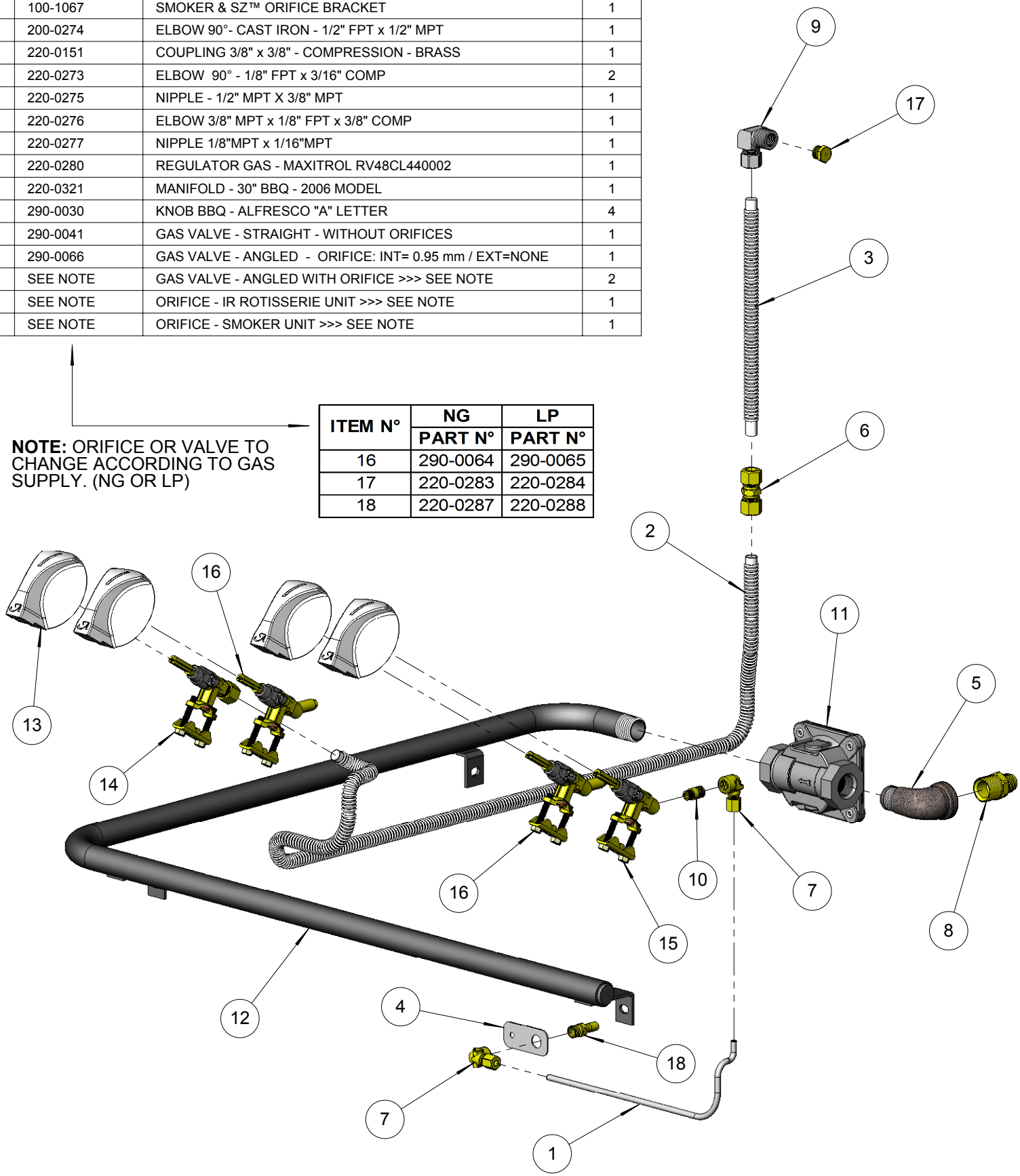

Alfresco™
SUPERIOR EQUIPMENT SOLUTIONS
7039 EAST SLAUSON AVENUE
COMMERCE, CA. 90040

THE INFORMATION CONTAINED IN THIS DRAWING IS THE SOLE PROPERTY OF SUPERIOR EQUIPMENT SOLUTIONS INC. ANY REPRODUCTION IN PART OR AS A WHOLE WITHOUT WRITTEN PERMISSION FROM SUPERIOR EQUIPMENT SOLUTIONS, INC. IS PROHIBITED.

DRAWN BY: ADRIAN CRISCI
CREATED: 10/10/2006 9:43:47 AM

PROJECT TITLE: **ALX2-30 BBQ**

DRAWING TITLE: **30" BBQ - GAS MANIFOLD DUAL "U" BURNER**

DRAWING NO.: **510-0132 MANU**

SHEET 1 O

BILL OF MATERIAL

NO.	PART NUMBER	DESCRIPTION	QTY.
1	100-1081	SMOKER TRAY	1
2	100-1082	SMOKER TRAY HANDLE	1
3	290-0135	HANDLE - 3/8"Ø X 3" L - TAPPED	1
4	200-0200	WASHER - # 8 - LOCK SPRING - SS	2
5	200-0083	8-32 X 1/4 - PAN HEAD - PHILIPS SCREW	2

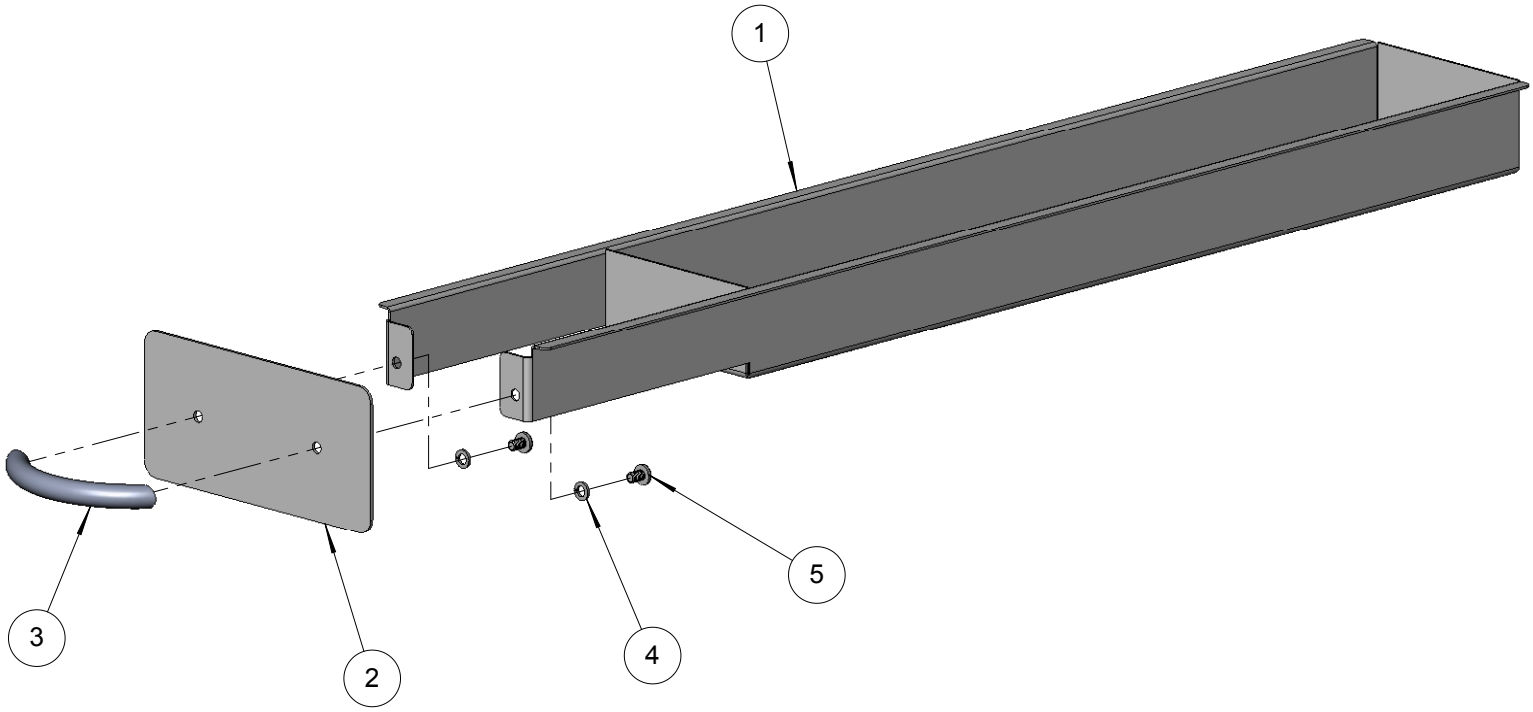

Alfresco™
SUPERIOR EQUIPMENT SOLUTIONS
7039 EAST SLAUSON AVENUE
COMMERCE, CA. 90040

THE INFORMATION CONTAINED IN THIS DRAWING IS THE SOLE PROPERTY OF SUPERIOR EQUIPMENT SOLUTIONS INC. ANY REPRODUCTION IN PART OR AS A WHOLE WITHOUT WRITTEN PERMISSION FROM SUPERIOR EQUIPMENT SOLUTIONS, INC. IS PROHIBITED.

DRAWN BY: ADRIAN CRISCI
CREATED: 10/18/2006 11:10:12 AM

PROJECT TITLE:
ALX2 BBQ

DRAWING TITLE:
SMOKER TRAY ASSEMBLY

DRAWING NO.:
510-0137 MANU

SHEET 1 O

BILL OF MATERIAL

NO.	PART NUMBER	DESCRIPTION	QTY.
1	100-1092	ROTISSERIE GEAR COVER	1
2	200-0079	8-32 X 3/4 - PAN HEAD - PHILIPS SCREW	2
3	200-0086	1/4-20 X 3/8 - TRUSS HEAD - PHILIPS SCREW	2
4	200-0111	SCREW 8-18 X ½ - SS - MMC# 92364A194	1
5	200-0148	SCREW 10-32 X 3/4" - FLAT HEAD - PHILIPS - 82° - SS	2
6	200-0166	SCREW 10-32 X ¼ Ø X ½ SHOULDER - SS	2
7	290-0119	ROLLER WHEEL - STAINLESS STL - ¾" Ø -	2
8	510-0139	ROTISSERIE GEAR ASSEMBLY	1
9	510-0151	ALX2-30 BACK HOOD AND RIM - WELDED PARTS	1
10	510-0217	30"- ROTISSERIE PANEL ASSEMBLY	1

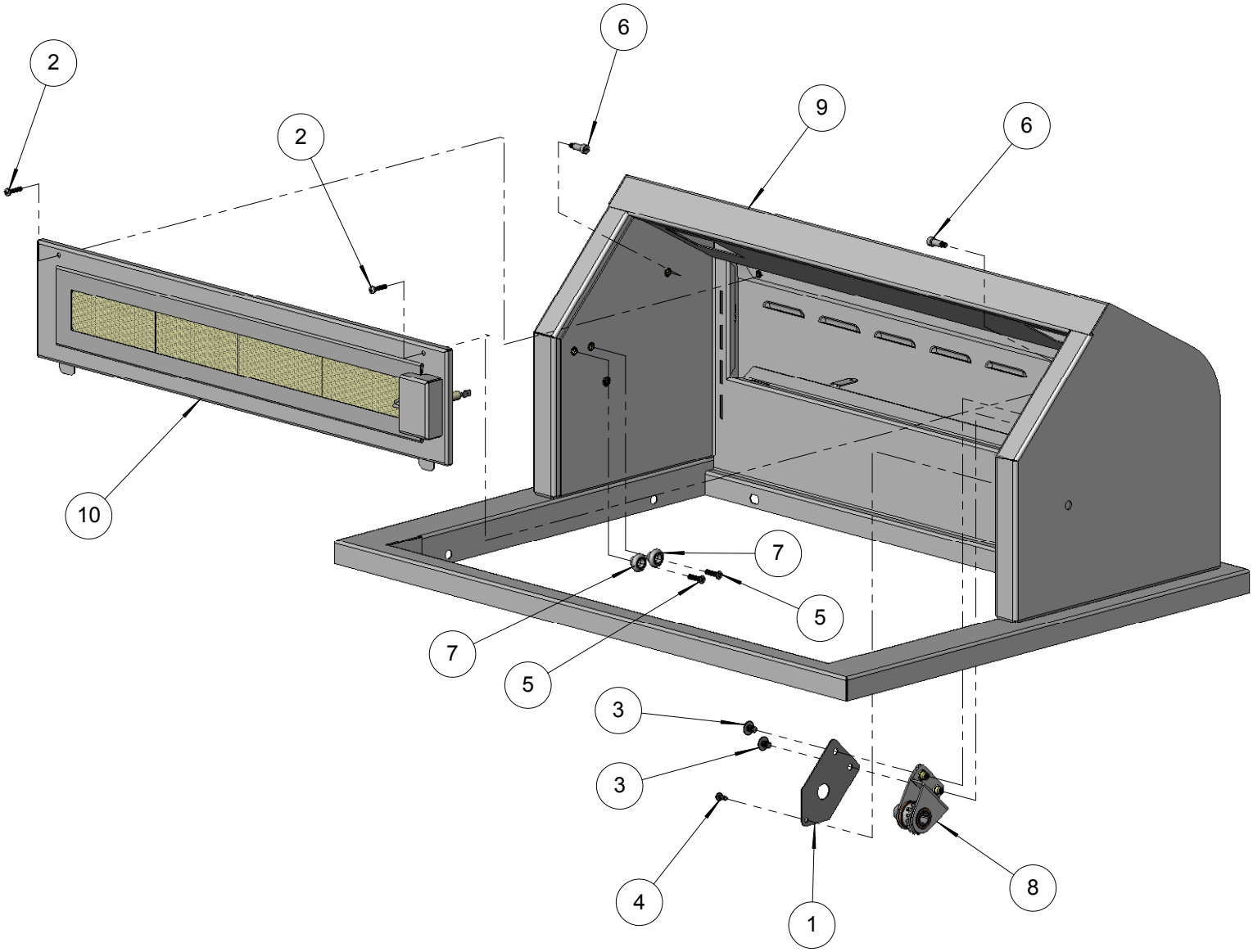

Alfresco™
SUPERIOR EQUIPMENT SOLUTIONS
7039 EAST SLAUSON AVENUE
COMMERCE, CA. 90040

THE INFORMATION CONTAINED IN THIS DRAWING IS THE SOLE PROPERTY OF SUPERIOR EQUIPMENT SOLUTIONS INC. ANY REPRODUCTION IN PART OR AS A WHOLE WITHOUT WRITTEN PERMISSION FROM SUPERIOR EQUIPMENT SOLUTIONS, INC. IS PROHIBITED.

DRAWN BY: ADRIAN CRISCI
CREATED: 10/18/2006 2:59:20 PM

PROJECT TITLE:
ALX2-30 BBQ

DRAWING TITLE:
30" BACK HOOD WITH RIM ASSEMBLY

DRAWING NO.:
510-0146 MANU

SHEET 1 O

BILL OF MATERIAL

NO.	PART NUMBER	DESCRIPTION	QTY.
1	200-0087	1/4" LOCK WASHER	4
2	200-0091	HH- HD - 1/4-20 x 1 x .75 THREAD	4
3	210-0418	ALFRESCO - 3-1/8"Ø - ALX2 THERMOMETER	1
4	290-0029	HANDLE BAR - 24" KNURLED	1
5	290-0063	HANDLE - END CAP ASSEMBLY	2
6	510-0195	ALX2-30 FRONT HOOD - SKIN ASSEMBLY	1

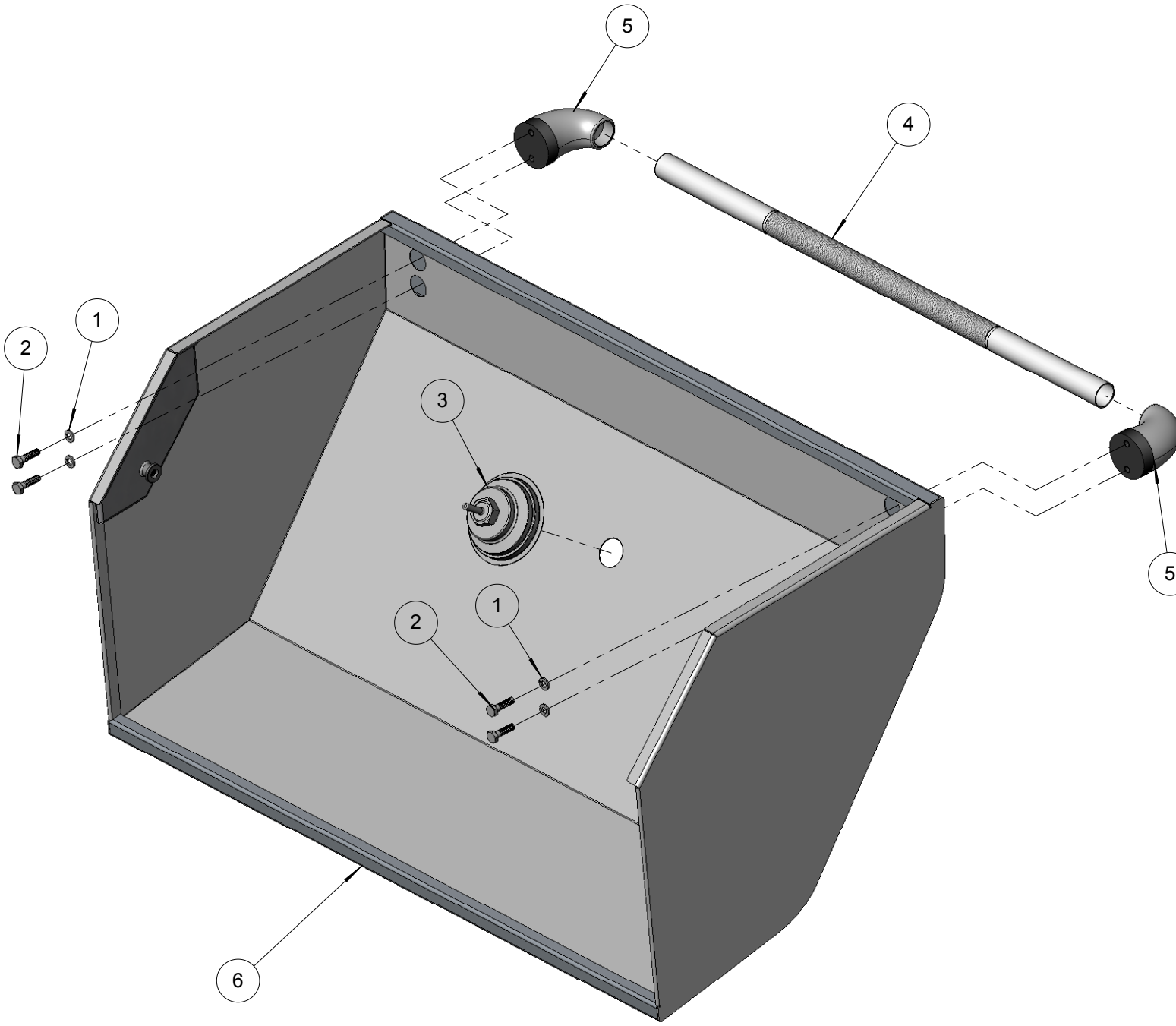

Alfresco™
SUPERIOR EQUIPMENT SOLUTIONS
7039 EAST SLAUSON AVENUE
COMMERCE, CA. 90040

THE INFORMATION CONTAINED IN THIS DRAWING IS THE SOLE PROPERTY OF SUPERIOR EQUIPMENT SOLUTIONS INC. ANY REPRODUCTION IN PART OR AS A WHOLE WITHOUT WRITTEN PERMISSION FROM SUPERIOR EQUIPMENT SOLUTIONS, INC. IS PROHIBITED.

DRAWN BY: ADRIAN CRISCI
CREATED: 10/19/2006 8:31:30 AM

PROJECT TITLE:
ALX2-30 BBQ

DRAWING TITLE:
ALX2-30 FRONT HOOD - MAIN ASSEMBLY

DRAWING NO.:
510-0194 MANU

SHEET 1 O

BILL OF MATERIAL

NO.	PART NUMBER	DESCRIPTION	QTY.
1	210-0194	IGNITER MODULE - 4 POINTS (WITH CAP)	1
2	210-0198	SWITCH - WEATHER BOOT & CAP	3
3	210-0332	ALX2-30 LEFT LAMP ASSEMBLY WITH HARNESS	1
4	210-0335	ALX2-BBQs LIGHT SWITCH WITH HARNESS	1
5	210-0337	ALX2-30 ROTISSERIE SWITCH WITH HARNESS	1
6	210-0340	SWITCH BBQ - IGNITER ONLY - OFF [ON] MOMENTARY	1
7	210-0341	ALX2-30 IGNITION WIRING HARNESS (4 WIRE SET)	1
8	510-0200	ALX2 ROTISSERIE MOTOR ASSEMBLY & J-BOX	1
9	210-0331	ALX2-BBQs RIGHT LAMP ASSEMBLY WITH HARNESS	1

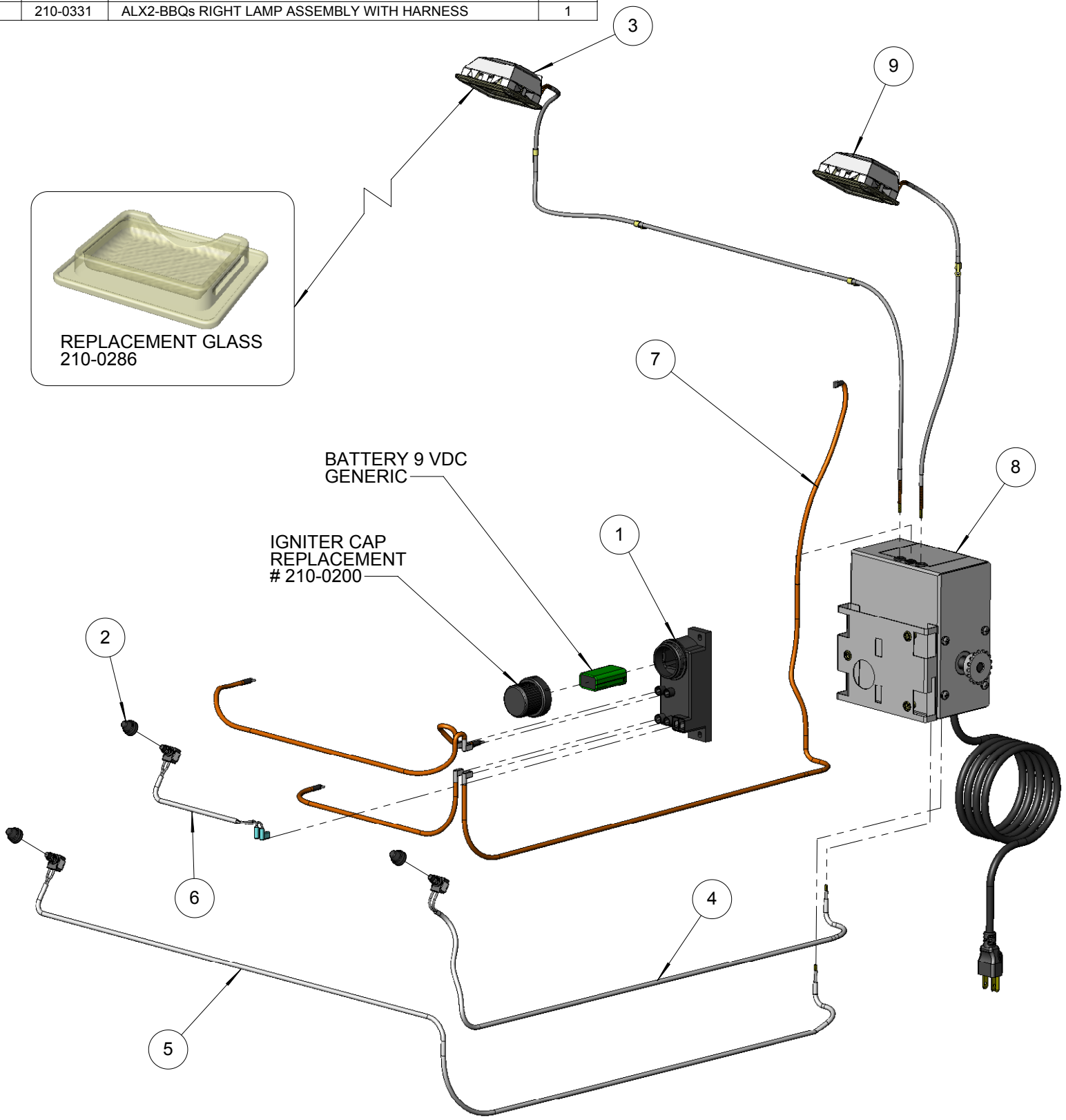

Alfresco™
SUPERIOR EQUIPMENT SOLUTIONS
7039 EAST SLAUSON AVENUE
COMMERCE, CA. 90040

THE INFORMATION CONTAINED IN THIS DRAWING IS THE SOLE PROPERTY OF SUPERIOR EQUIPMENT SOLUTIONS INC. ANY REPRODUCTION IN PART OR AS A WHOLE WITHOUT WRITTEN PERMISSION FROM SUPERIOR EQUIPMENT SOLUTIONS, INC. IS PROHIBITED.

DRAWN BY: ADRIAN CRISCI
CREATED: 10/13/2006 4:18:35 PM

PROJECT TITLE:
ALX2-30 BBQ

DRAWING TITLE:
ALX2-30 ELECTRICAL COMPONENTS

DRAWING NO.:
510-0204 MANU

SHEET 1 O

BILL OF MATERIAL

NO.	PART NUMBER	DESCRIPTION	QTY.
1	100-1225	ROTISSERIE ELECTRODE COVER	1
2	100-1226	ROTISSERIE ELECTRODE BRACKET	1
3	200-0111	SCREW 8-18 X ½ - SS - MMC# 92364A194	3
4	210-0240	ELECTRODE - DUAL TIP - IR BURNERS	1
5	510-0250	ALX2-30 ROTISSERY PANEL - WELDED PARTS	1

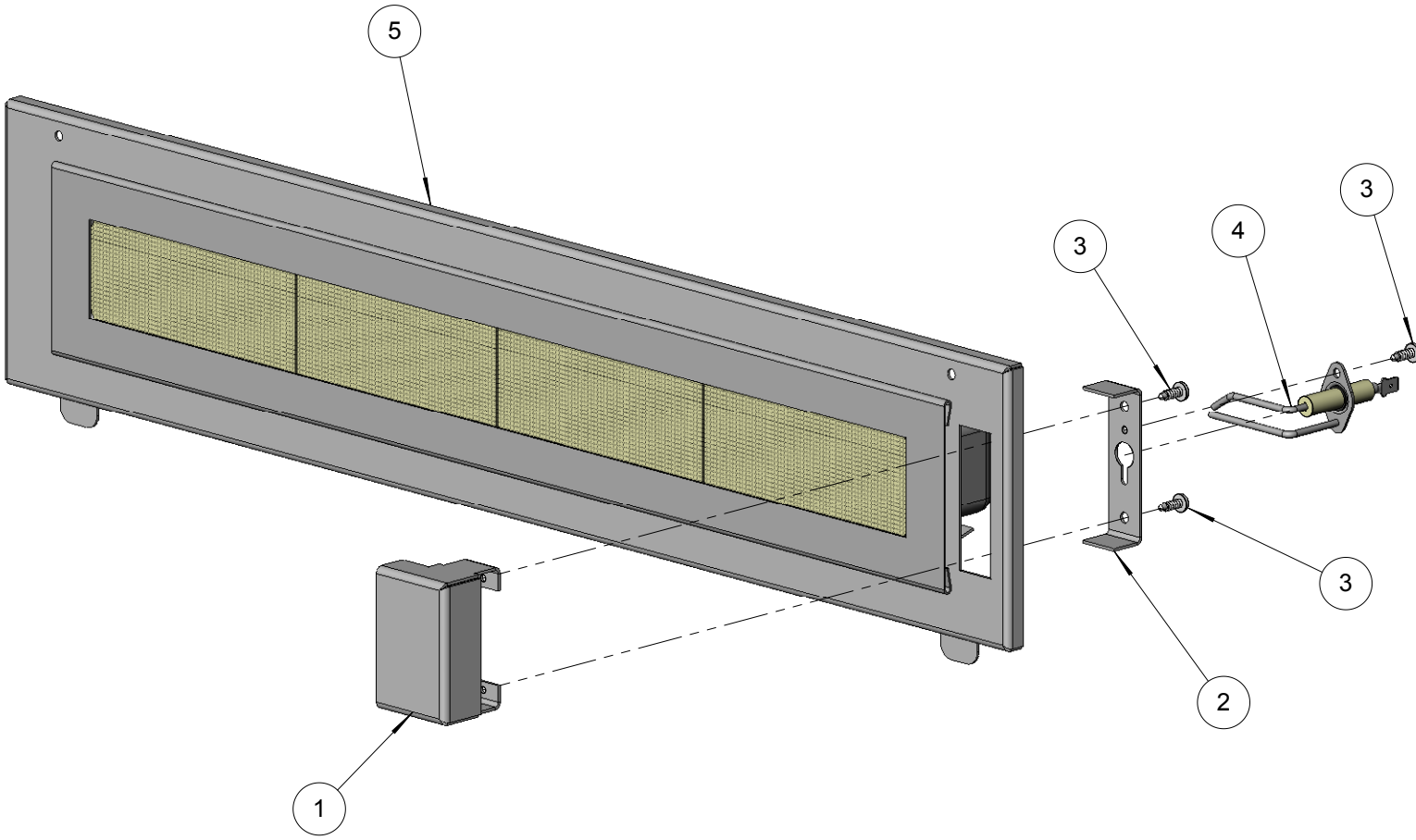

Alfresco™
SUPERIOR EQUIPMENT SOLUTIONS
7039 EAST SLAUSON AVENUE
COMMERCE, CA. 90040

THE INFORMATION CONTAINED IN THIS DRAWING IS THE SOLE PROPERTY OF SUPERIOR EQUIPMENT SOLUTIONS INC. ANY REPRODUCTION IN PART OR AS A WHOLE WITHOUT WRITTEN PERMISSION FROM SUPERIOR EQUIPMENT SOLUTIONS, INC. IS PROHIBITED.

DRAWN BY: ADRIAN CRISCI
CREATED: 4/3/2007 3:22:15 PM

PROJECT TITLE:
ALX2-30/30SZ/56BFG BBQ

DRAWING TITLE:
30"- ROTISSERIE PANEL ASSEMBLY

DRAWING NO.:
510-0217 MANU

SHEET 1 O

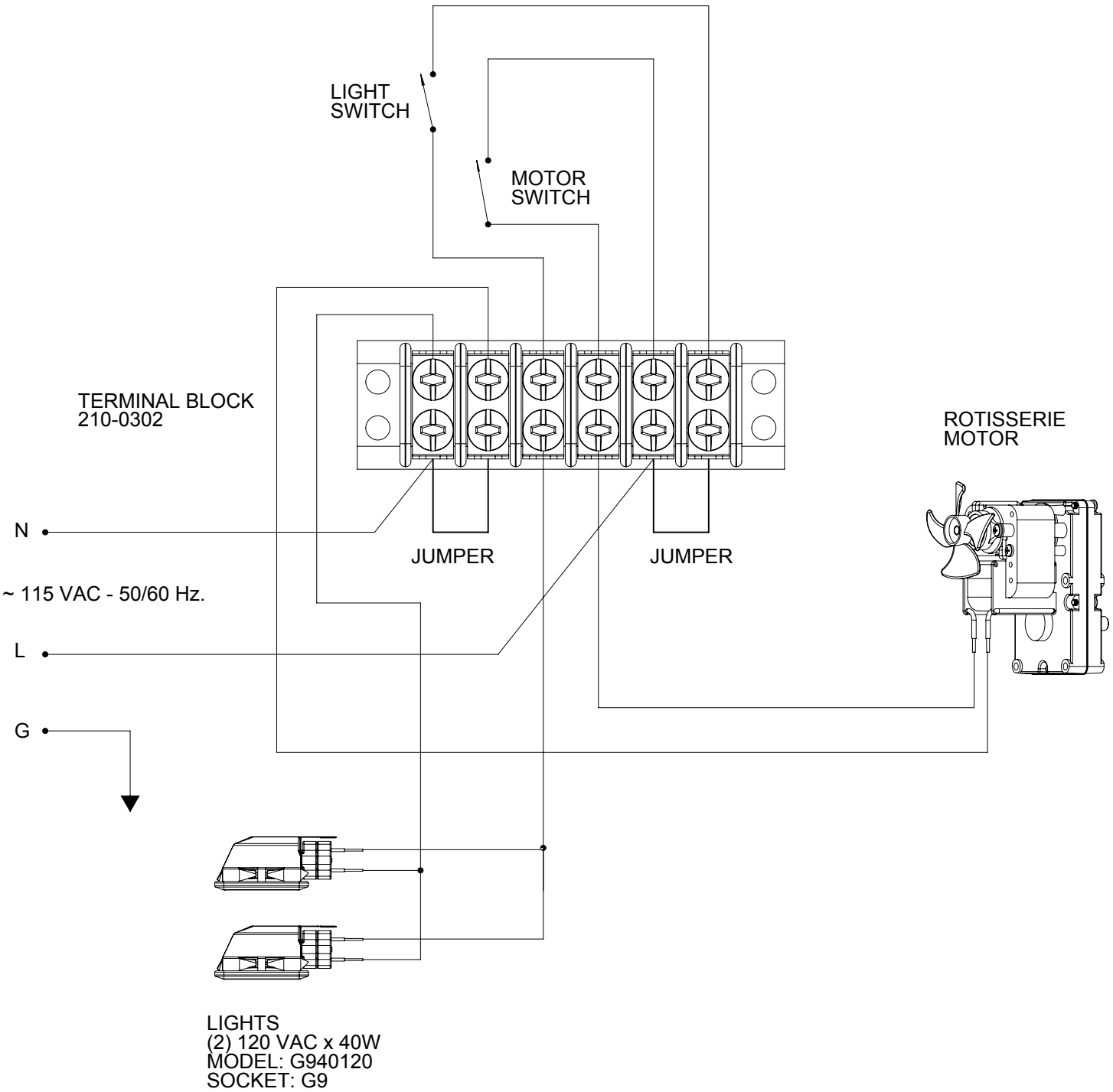

Alfresco™

SUPERIOR EQUIPMENT SOLUTIONS
7039 EAST SLAUSON AVENUE
COMMERCE, CA. 90040

THE INFORMATION CONTAINED IN THIS DRAWING IS THE SOLE PROPERTY OF SUPERIOR EQUIPMENT SOLUTIONS INC. ANY REPRODUCTION IN PART OR AS A WHOLE WITHOUT WRITTEN PERMISSION FROM SUPERIOR EQUIPMENT SOLUTIONS, INC. IS PROHIBITED.

DRAWN BY: ADRIAN CRISCI
CREATED: 9/21/2006

PROJECT TITLE: **ALX2-BBQ WIRING DIAGRAM**

DRAWING TITLE:
6 POLE TERMINAL WITH 90° QUICK TABS

DRAWING NO.:
ALX2-BBQ

SHEET 1 OF 1