This Owner's Manual is provided and hosted by Appliance Factory Parts.

Appliance Factory Parts
Experts in BBQ, Humidifier, & Appliance Parts
1-800-955-7075

GE SCB1000MWW001 Owner's Manual

Shop genuine replacement parts for GE SCB1000MWW001

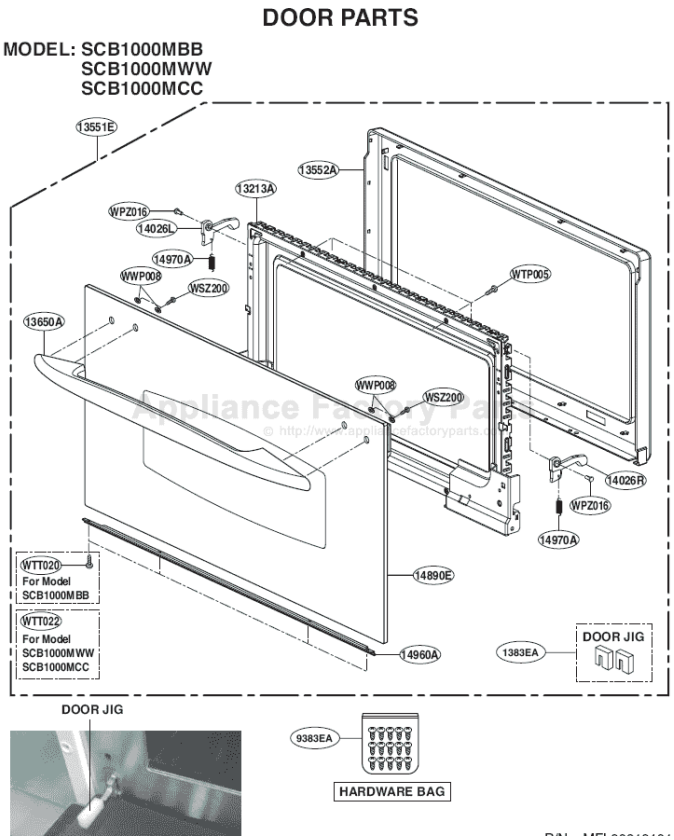

Find Your GE Microwave Parts - Select From 3055 Models

-------- Manual continues below --------

EXPLODED VIEW

DOOR PARTS

MODEL: SCB1000MBB
SCB1000MWW
SCB1000MCC

13551E
13552A
13213A
WPZ016
14026L
14970A
WWP008
WSZ200
WTP005
13650A
WWP008
WSZ200
14026R
WPZ016
14970A
WTT020
For Model
SCB1000MBB
WTT022
For Model
SCB1000MWW
SCB1000MCC
14890E
14960A
1383EA
DOOR JIG

DOOR JIG

9383EA

HARDWARE BAG

P/No: MFL38213101

DOOR PARTS

MODEL: SCB1001MSS

13551E
13552A
13213A
WPZ016
14026L
14970A
WWS016
WSZ182
WTP005
13650A
WWS016
WSZ182
14026R
WPZ016
14970A
WTT022
14890E
DOOR JIG
1383EA

DOOR JIG

9383EA

HARDWARE BAG

CONTROLLER PARTS

MODEL: SCB1000MBB
SCB1000MWW
SCB1000MCC
SCB1001MSS

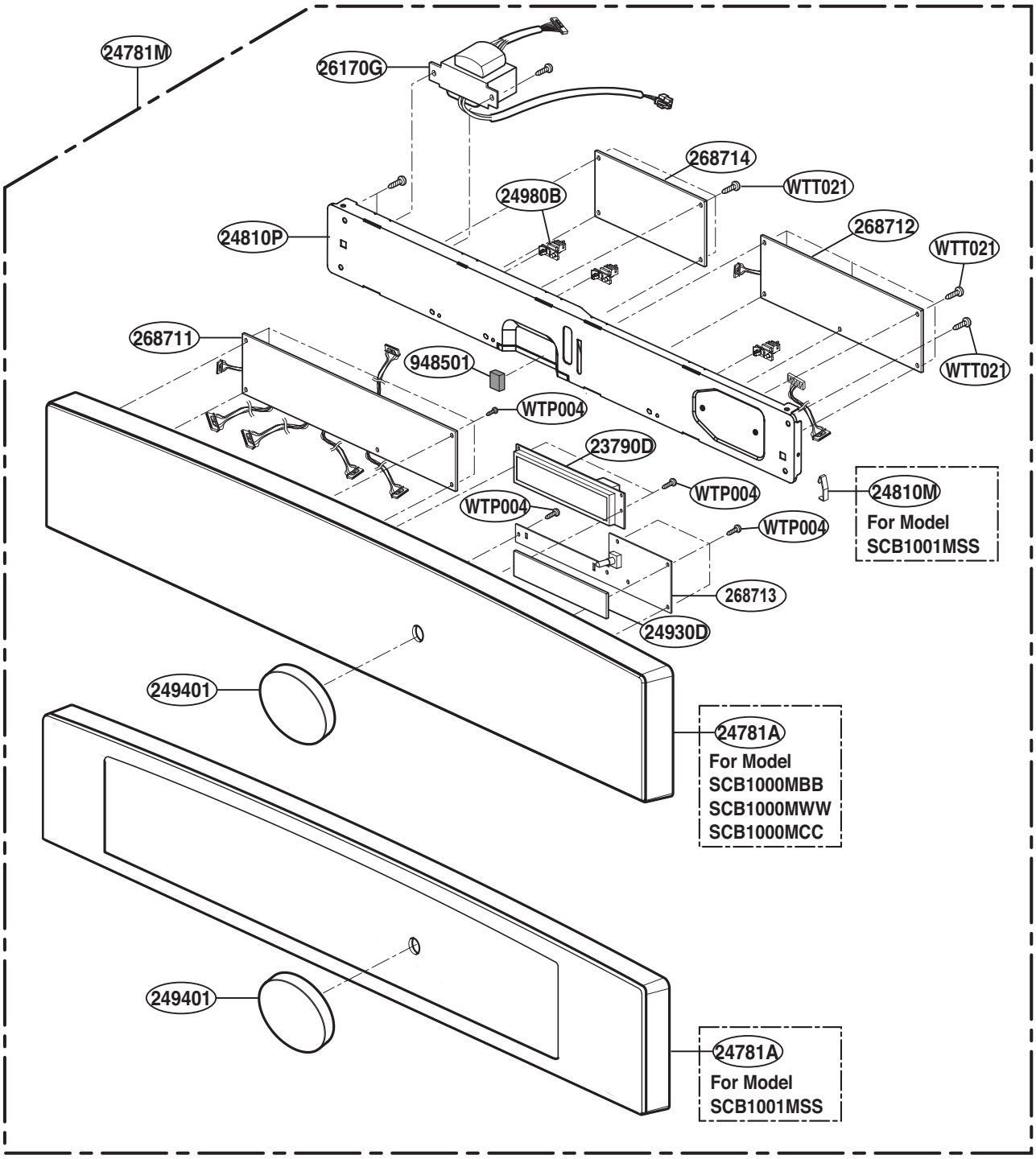

OVEN CAVITY PARTS

MODEL: SCB1000MBB
SCB1000MWW
SCB1000MCC
SCB1001MSS

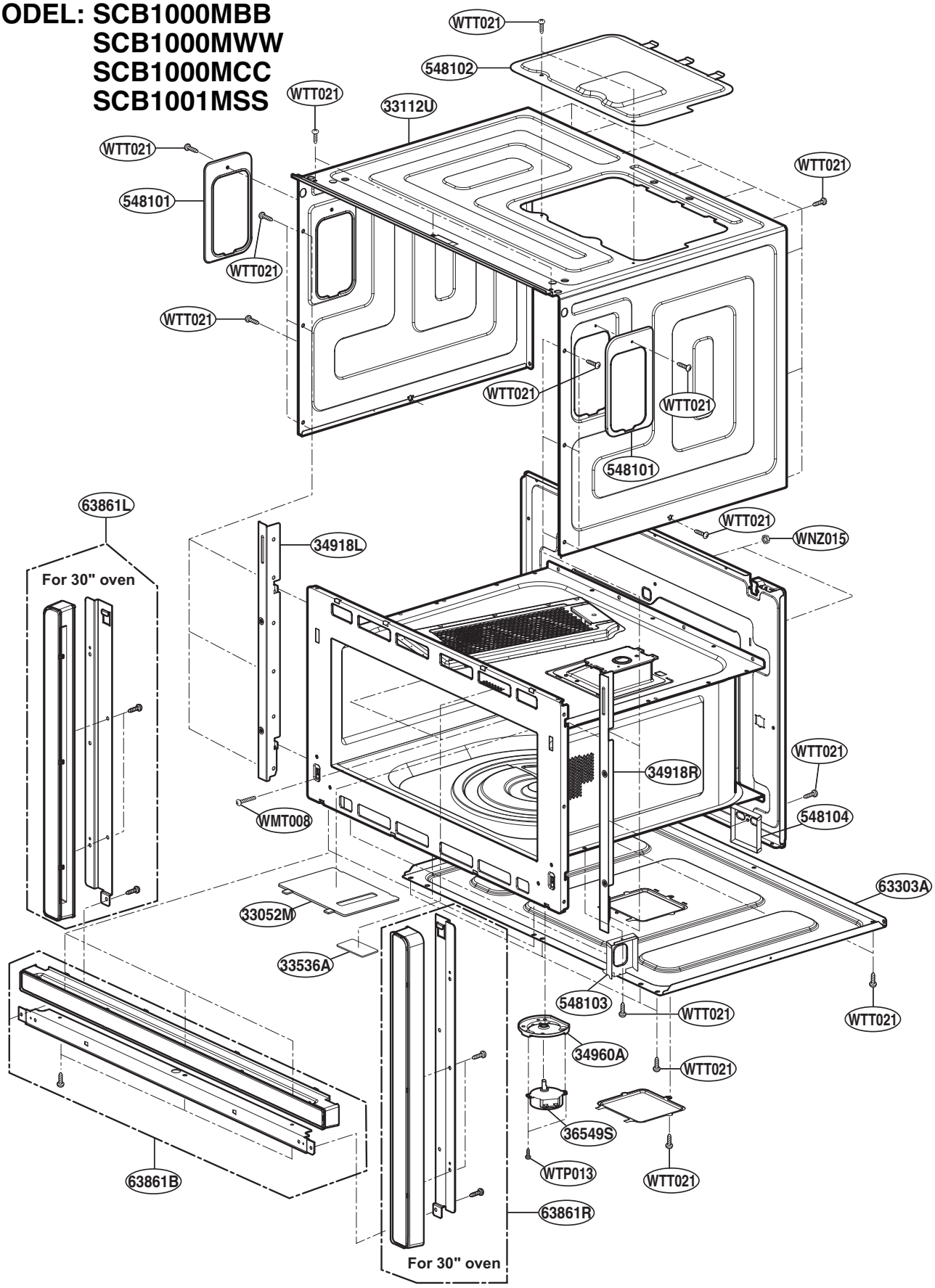

INTERIOR PARTS

MODEL: SCB1000MBB
SCB1000MWW
SCB1000MCC
SCB1001MSS

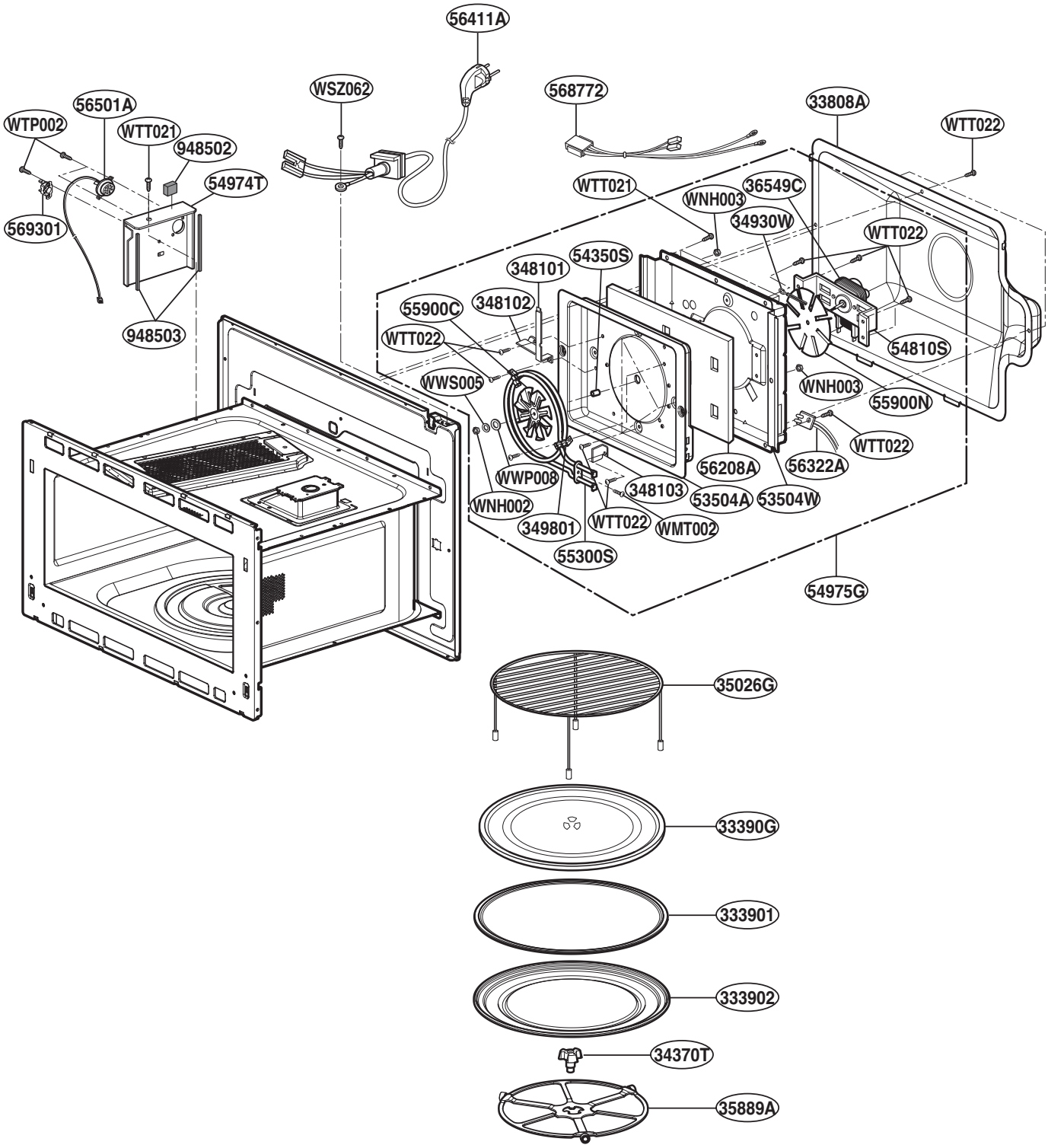

INSULATOR PARTS
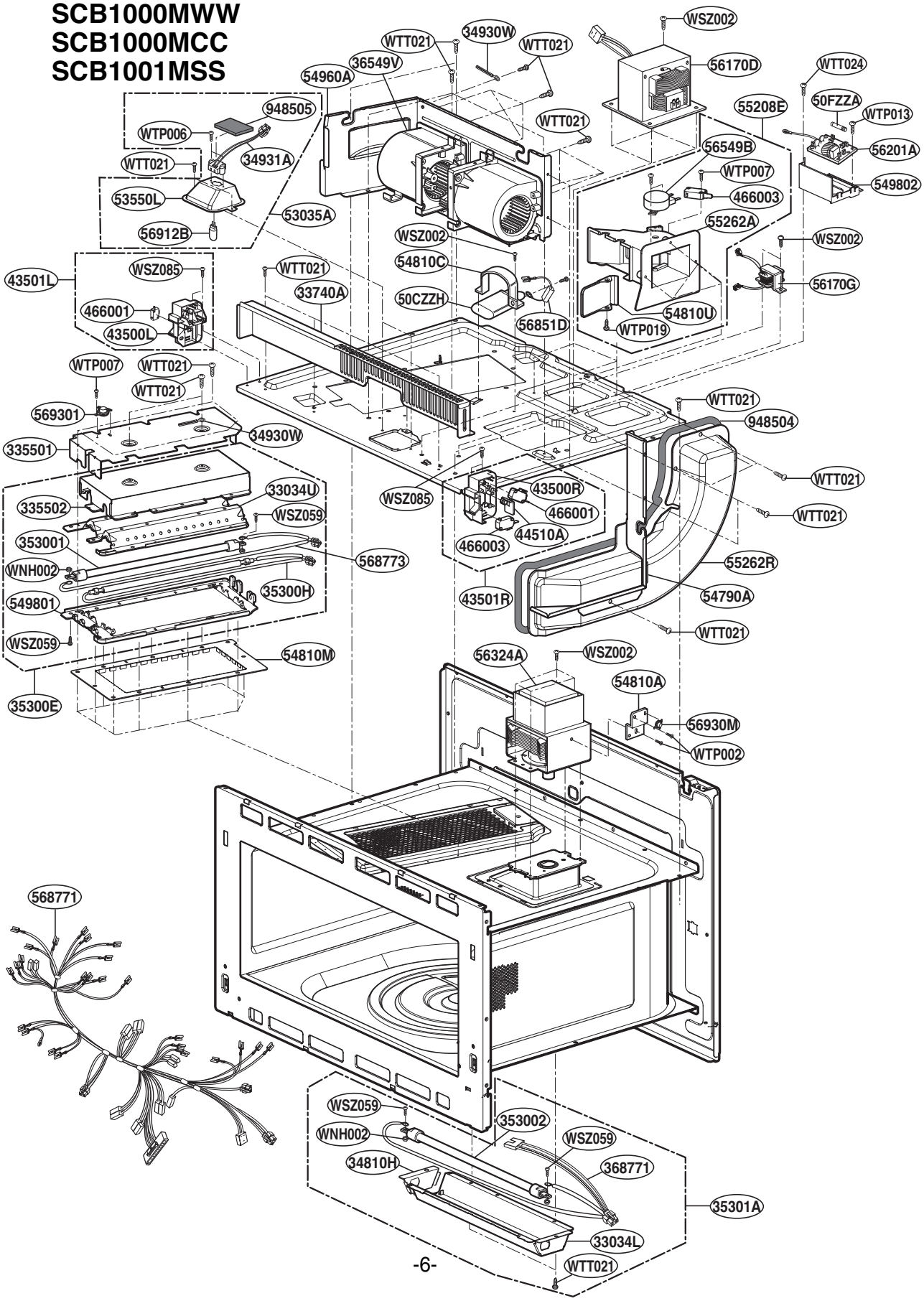
MODEL: SCB1000MBB
SCB1000MWW
SCB1000MCC
SCB1001MSS