This Owner's Manual is provided and hosted by Appliance Factory Parts.

Appliance Factory Parts
Experts in BBQ, Humidifier, & Appliance Parts
1-800-955-7075

GE JNM1541DM3WW Owner's Manual

Shop genuine replacement parts for GE JNM1541DM3WW

Find Your GE Microwave Parts - Select From 3055 Models

-------- Manual continues below --------

EXPLODED VIEW

DOOR PARTS(I)

For Model :
JVM1540DMWW
JVM1540DMBB
JVM1540DMCC
JNM1541DMWW
JNM1541DMBB
JNM1541DMCC
HVM1540DMWW
HVM1540DMBB

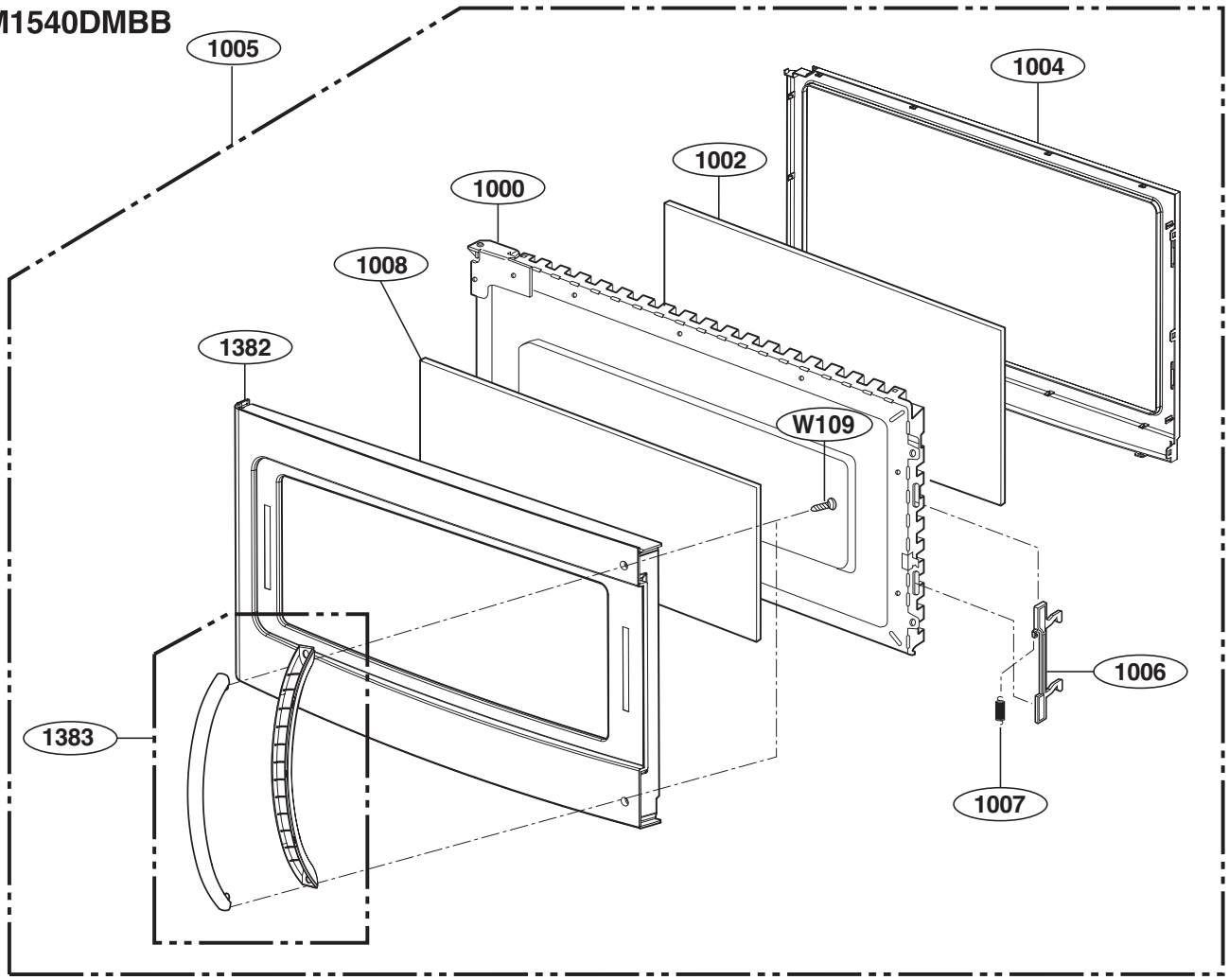

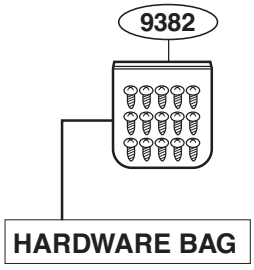

P/No: MFL32357701

CONTROLLER PARTS(I)

For Model :
JVM1540DMWW
JVM1540DMBB
JVM1540DMCC
JNM1541DMWW
JNM1541DMBB
JNM1541DMCC
HVM1540DMWW
HVM1540DMBB

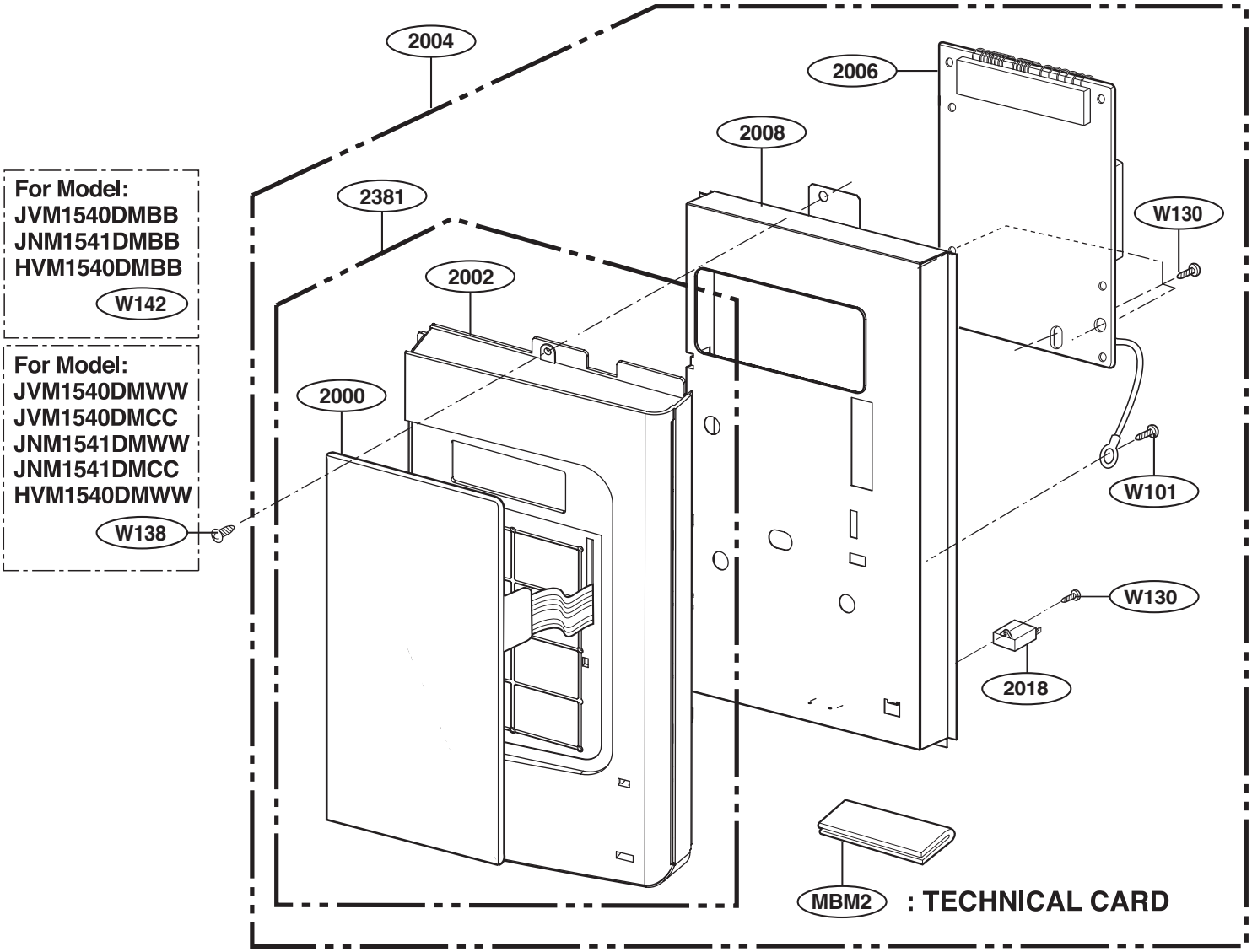

OVEN CAVITY PARTS

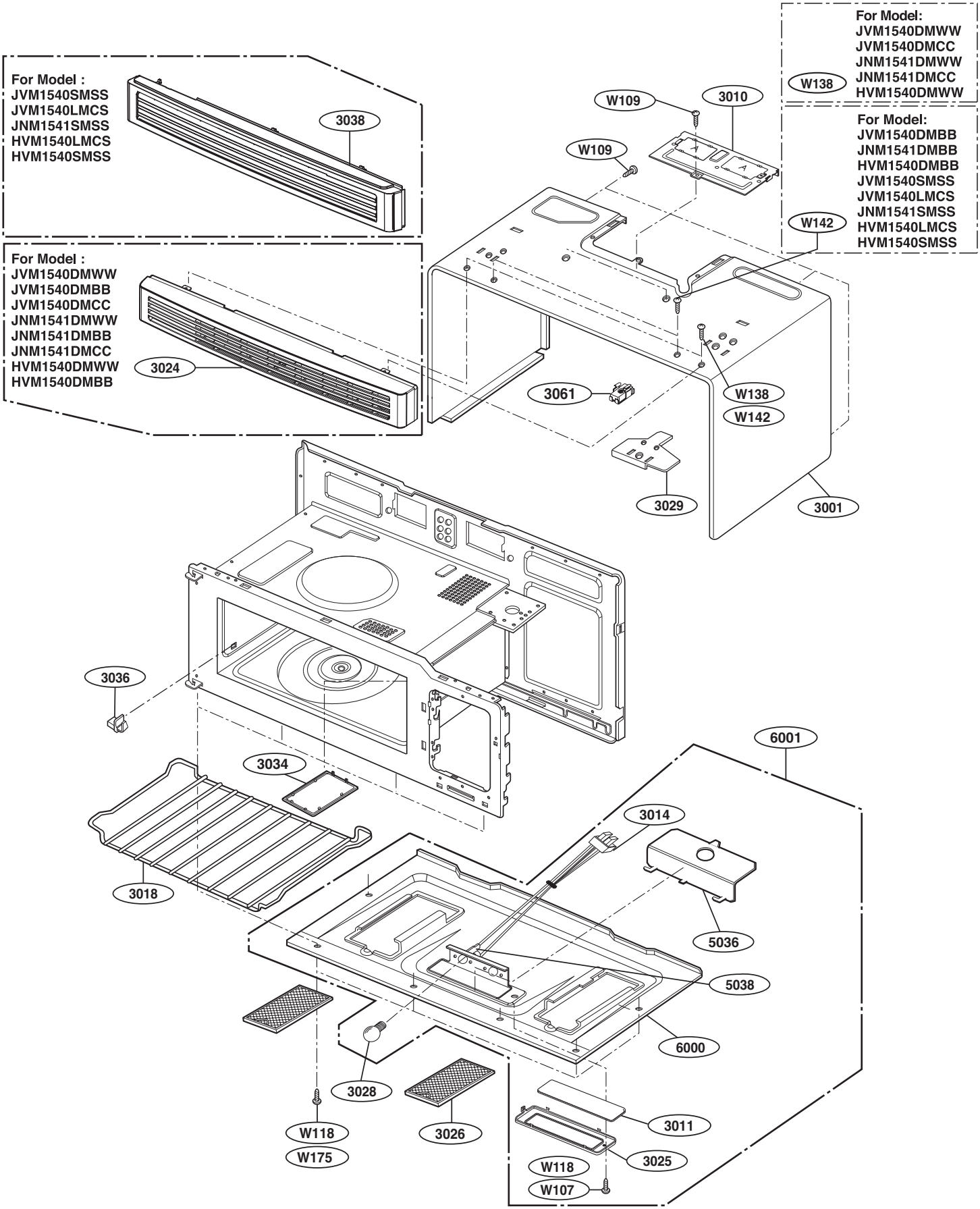

LATCH BOARD PARTS

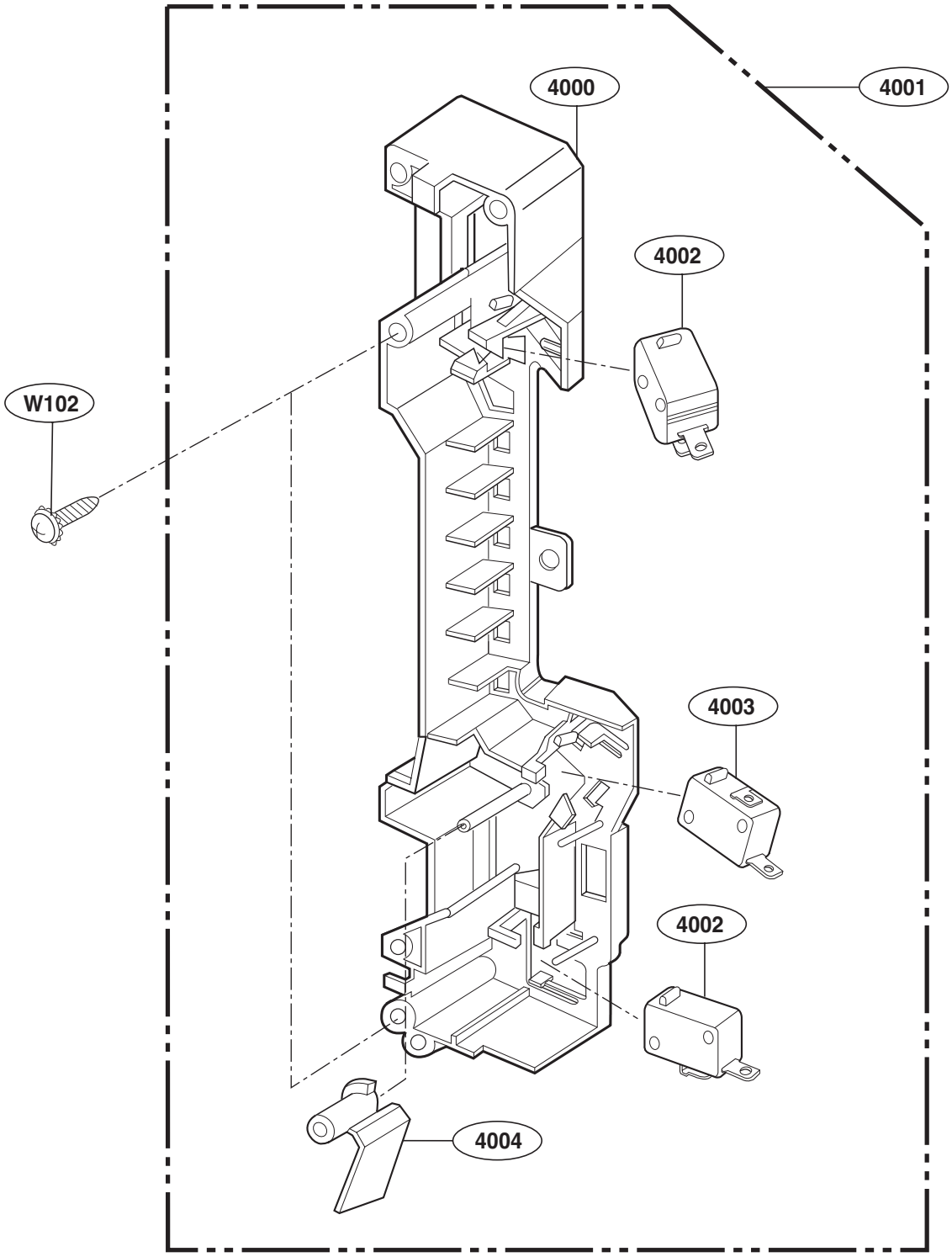

INTERIOR PARTS (I)

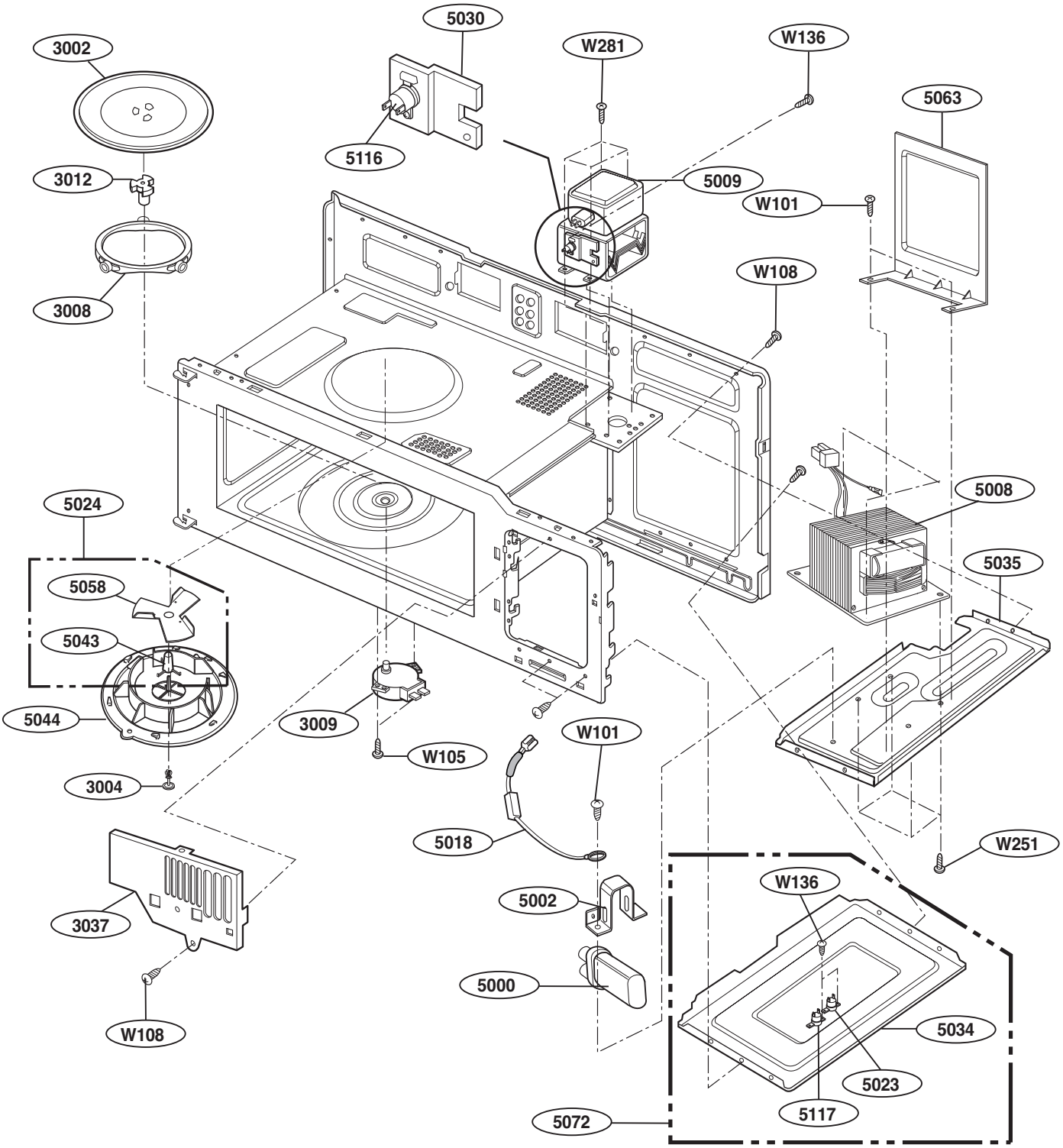

INTERIOR PARTS (II)

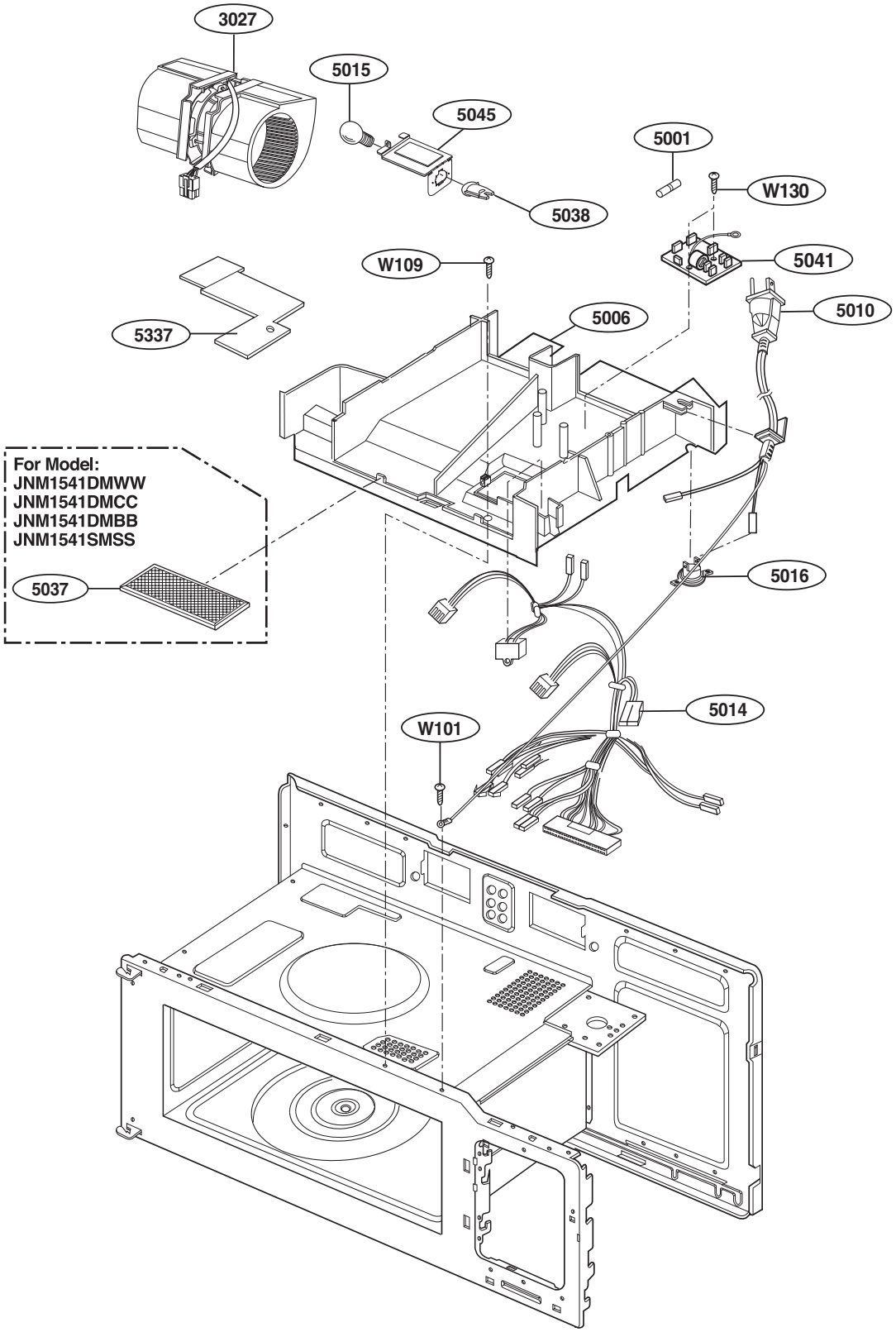
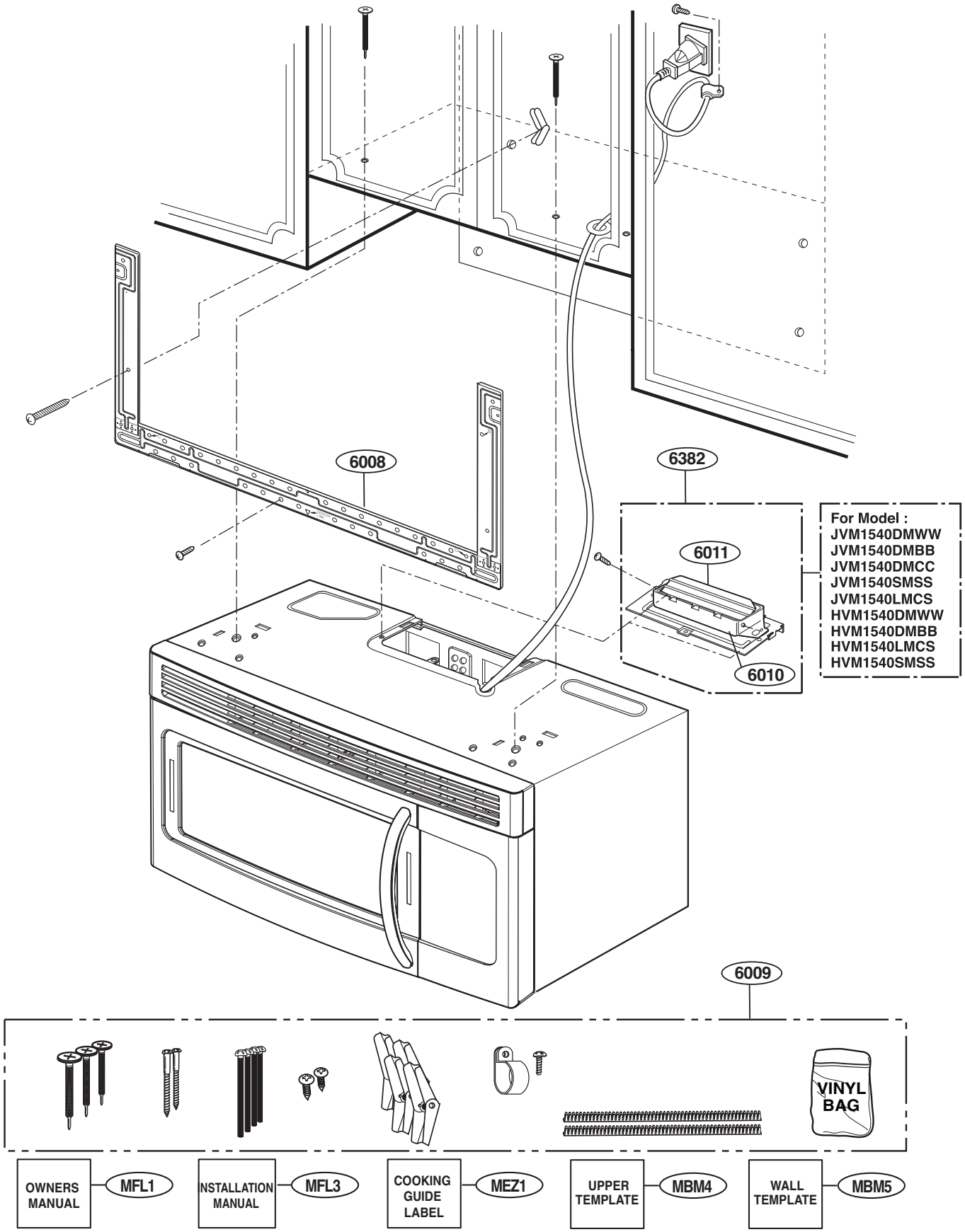
INSTALLATION PARTS