This Owner's Manual is provided and hosted by Appliance Factory Parts.

Appliance Factory Parts
Experts in BBQ, Humidifier, & Appliance Parts
1-800-955-7075

Vermont Castings RESOLUTION Owner's Manual

Shop genuine replacement parts for Vermont Castings RESOLUTION

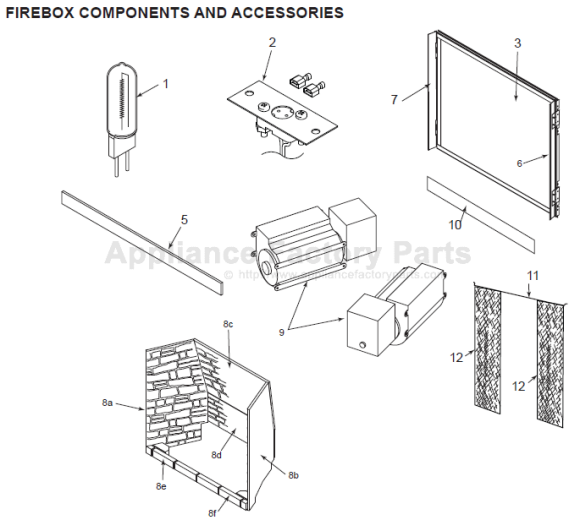

Find Your Vermont Castings Fireplace Parts - Select From 28 Models

-------- Manual continues below --------

Resolution
Direct Vent Gas Fireplace
Installation and Operating Instructions
Models: VHLDV500

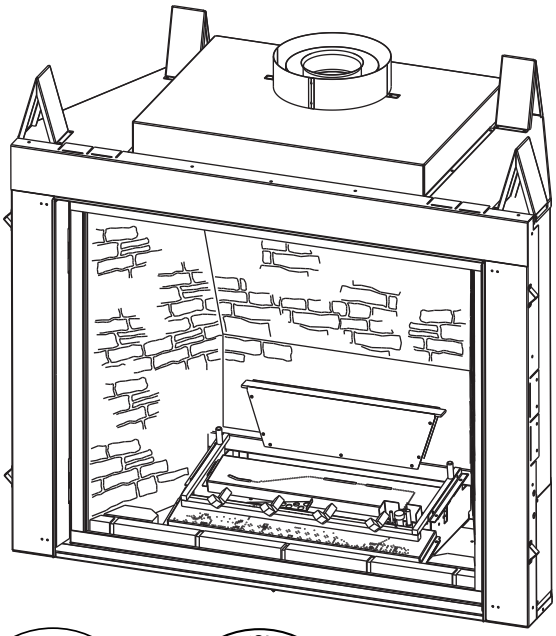

WARNING

IF THE INFORMATION IN THESE INSTRUCTIONS IS NOT FOLLOWED EXACTLY, A FIRE OR EXPLOSION MAY RESULT CAUSING PROPERTY DAMAGE, PERSONAL INJURY OR LOSS OF LIFE.

- **Do not store or use gasoline or other flammable vapors and liquids in the vicinity of this or any other appliance.**
- **WHAT TO DO IF YOU SMELL GAS**
  - **Do not try to light any appliance.**
  - **Do not touch any electrical switch; do not use any phone in your building.**
  - **Immediately call your gas supplier from a neighbor's phone. Follow the gas supplier's instructions.**
  - **If you cannot reach your gas supplier, call the fire department.**
- **Installation and service must be performed by a qualified installer, service agency or the gas supplier.**

WARNING: Improper installation, adjustment, alteration, services or maintenance can cause injury or property damage. Refer to this manual. For assistance or additional information consult a qualified installer, service agency or the gas supplier.

This appliance may be installed in an aftermarket*, permanently located, manufactured home (USA only) or mobile home, where not prohibited by local codes.
This appliance is only for use with the type of gas indicated on the rating plate. This appliance is not convertible for use with other gases, unless a certified kit is used.

* Aftermarket: Completion of sale, not for purpose of resale, from the manufacturer.

CERTIFIED ®

DESIGN CERTIFIED ®

DUE TO HIGH TEMPERATURES, THE APPLIANCE SHOULD BE LOCATED OUT OF TRAFFIC AND AWAY FROM FURNITURE AND DRAPERIES.

CHILDREN AND ADULTS SHOULD BE ALERTED TO THE HAZARDS OF HIGH SURFACE TEMPERATURE AND SHOULD STAY AWAY TO AVOID BURNS OR CLOTHING IGNITION.

YOUNG CHILDREN SHOULD BE SUPERVISED WHEN THEY ARE IN THE SAME ROOM AS THE APPLIANCE.

CLOTHING OR OTHER FLAMMABLE MATERIAL SHOULD NOT BE PLACED ON OR NEAR THE APPLIANCE.

KEEP THE ROOM AREA CLEAR AND FREE FROM COMBUSTIBLE MATERIALS, GASOLINE, AND OTHER FLAMMABLE VAPORS AND LIQUIDS.

INSTALLER: Leave this manual with the appliance.

CONSUMER: Retain this manual for future reference.

20300293 2/10 Rev. 2

Thank you and congratulations on your purchase of a Vermont Castings Fireplace.

PLEASE READ THE INSTALLATION AND OPERATION INSTRUCTIONS BEFORE USING THE APPLIANCE!

IMPORTANT: Read all instructions and warnings carefully before starting installation. Failure to follow these instructions may result in a possible fire hazard and will void the warranty.

Important Safety Information 3
Code Approval 4
Product Features 5
High Elevations 5
Gas Pressures 5
Gas Specifications & Orifice Size 5
Fireplace & Framing Dimensions 6
Pre-Installation Information 7
Before You Start 7
Fireplace Framing 7
Fireplace Location 8
Clearances 9
Secure Fireplace 10
Finishing Material 10
Venting Installation 11
Installation Precautions 11
Installation Clearances 11
Installation Planning 12
Vertical Termination 12
Horizontal Termination 12
How to Use a Vent Graph 14
Vertical Sidewall Installation 15
Vertical/Horizontal Termination Configurations 16
Below Grade Installation 17
Vertical Through-the-Roof Applications 18
Installation for Vertical Termination 19
Fireplace Installation 21
Check Gas Type 21
Install Gas Piping 21
Check Gas Pressure 23
Electrical Installation 23
Electrical Wiring 23
Junction Box Wiring 24
Command Center Wall Installation 24
Wall Switch Installation 24
Signature Command Wiring Diagram 25
Fan/Blower System 26
Glass Frame Removal 27
Stone, Light Bulb and Lens Placement 28
Rock Wool Placement 28
Log Placement 29
Operating Instructions 33
Operating Instructions 34
To Turn Off Gas 34
Signature Command System
Operation Instructions 35
Touch Screen Remote Transmitter Operation 38
Cleaning and Maintenance 44
Burner, Pilot and Control Compartment 44
Pilot Flame 44
Burner Flame 44
Venting System 45
Glass Door 45
Logs 45
Rock Wool 45
Troubleshooting 46
Replacement Parts 47
Firebox Components 47
Signature Command System 48
Logs 50
Venting Components 51
Massachusetts Residents Only 54
Warranty 5
Efficiencies 56

INSTALLER

Please leave these instructions with the appliance.

OWNER

Please retain these instructions for future reference.

WARNING

- **Read this owner's manual carefully and completely before trying to assemble, operate, or service this fireplace.**
- **Any change to this fireplace or its controls can be dangerous.**
- **Improper installation or use of this fireplace can cause serious injury or death from fire, burns, explosions, electrical shock and carbon monoxide poisoning.**

This fireplace is a vented product. This fireplace must be properly installed by a qualified service person. The glass door must be properly seated and sealed. If this unit is not properly installed by a qualified service person with glass door properly seated and sealed, combustion leakage can occur.

CARBON MONOXIDE POISONING: Early signs of carbon monoxide poisoning are similar to the flu with headaches, dizziness and/or nausea. If you have these signs, the fireplace may not have been installed properly. Get fresh air at once! Have the fireplace inspected and serviced by a qualified service person. Some people are more affected by carbon monoxide than others. These include pregnant women, people with heart or lung disease or anemia, those under the influence of alcohol, and those at high altitudes.

Propane/LP gas and natural gas are both odorless. An odor-making agent is added to each of these gases. The odor helps you detect a gas leak. However, the odor added to these gases can fade. Gas may be present even though no odor exists.

Make certain you read and understand all warnings. Keep this manual for reference. It is your guide to safe and proper operation of this fireplace.

1. This appliance is only for use with the type of gas indicated on the rating plate. This appliance is not convertible for use with other gases unless a certified kit is used.
2. For propane/LP fireplace, do not place propane/LP supply tank(s) inside any structure. Locate propane/LP supply tank(s) outdoors. To prevent performance problems, do not use propane/LP fuel tank of less than 100 lbs. capacity.
3. If you smell gas
   - shut off gas supply.
   - do not try to light any appliance.
   - do not touch any electrical switch; do not use any phone in your building .
   - immediately call your gas supplier from a neighbor's phone. Follow the gas supplier's instructions.
4. Never install the fireplace
   - in a recreational vehicle
   - where curtains, furniture, clothing, or other flammable objects are less than 42" from the front, top, or sides of the fireplace
   - in high traffic areas
   - in windy or drafty areas
5. This fireplace reaches high temperatures. Keep children and adults away from hot surfaces to avoid burns or clothing ignition. Fireplace will remain hot for a time after shutdown. Allow surfaces to cool before touching.
6. Carefully supervise young children when they are in the room with fireplace.
7. Do not modify fireplace under any circumstances. Any parts removed for servicing must be replaced prior to operating fireplace.
8. Turn fireplace off and let cool before servicing, installing, or repairing. Only a qualified service person should install, service, or repair the fireplace. Have burner system inspected annually by a qualified service person.
9. You must keep control compartments, burners, and circulating air passages clean. More frequent cleaning may be needed due to excessive lint and dust. Turn off the gas valve and pilot light before cleaning fireplace.
10. Have venting system inspected annually by a qualified service person. If needed, have venting system cleaned or repaired. Refer to *Cleaning and Maintenance*, *Page 44.*
11. Keep the area around your fireplace clear of combustible materials, gasoline, and other flammable vapor and liquids. Do not run fireplace where these are used or stored. Do not place items such as clothing or decorations on or around fireplace.
12. Do not use this fireplace to cook food or burn paper or other objects.
13. Never place anything on top of fireplace.
14. Do not use any solid fuels (wood, coal, paper, cardboard, etc.) in this fireplace. Use only the gas type indicated on rating plate.

Continued from page 3

15. This appliance, when installed, must be electrically grounded in accordance with local codes or in the absence of local codes, with the *National Electrical Code, ANSI/NFPA 70*, or the *Canadian Electrical Code, CSA C22.1.*
16. Do not obstruct the flow of combustion and ventilation air in any way. Provide adequate clearances around air openings into the combustion chamber along with adequate accessibility clearance for servicing and proper operation.
17. When the appliance is installed directly on carpeting, tile or other combustible material other than wood flooring, you must set appliance on a metal or wood panel or hearth pad extending the full width and depth of the appliance.
18. Do not use fireplace if any part has been exposed to or has been under water. Immediately call a qualified service technician to inspect the appliance and replace any part of the control system and any gas control which as been submerged in water.
19. Do not operate fireplace if any log is broken.
20. Do not use a blower insert, heat exchanger insert, or any other accessory not approved for use with this fireplace.
21. Do not operate the fireplace with glass door removed, cracked, or broken.

NATIONAL FIREPLACE INSTITUTE NFI CERTIFIED www.nficertified.org

We recommend that our gas hearth products be installed and serviced by professionals who are certified in the U.S. by the National Fireplace Institute® (NFI) as NFI Gas Specialists.

IMPORTANT:
PLEASE READ THE FOLLOWING CAREFULLY

It is normal for fireplaces fabricated of steel to give off some expansion and/or contraction noises during the start up or cool down cycle. Similar noises are found with your furnace heat exchanger or car engine.

IMPORTANT:
PLEASE READ THE FOLLOWING CAREFULLY

It is not unusual for gas fireplaces to give off some odor the first time it is burned. This is due to the manufacturing process.

Please ensure that your room is well ventilated during burn off — open all windows.

It is recommended that you burn your fireplace for at least ten (10) hours the first time you use it. Place the fan switch in the "OFF" position during this time.

WARNING

Never connect unit to private (non-utility) gas wells. This gas is commonly known as wellhead gas.

WARNING

HOT GLASS WILL CAUSE BURNS.

DO NOT TOUCH GLASS UNTIL COOLED.

NEVER ALLOW CHILDREN TO TOUCH GLASS.

CODE APPROVAL

Direct Vent type appliances draw all combustion air from outside of the dwelling through the vent pipe.

These appliances have been tested by CSA and found to comply with the established standards for DIRECT VENT GAS FIREPLACE HEATERS in the USA and Canada as follows:

LISTED VENTED GAS FIREPLACE HEATER
TESTED TO: ANSI Z21.88-2009 / CSA 2.33-2009 STANDARDS

A manufactured home (USA only) or mobile home OEM installation must conform with the ***Manufactured Home Construction and Safety Standard,*** **Title 24 CFR, Part 3280,** or when such a standard is not applicable, the **Standard for Manufactured Home Installations, ANSI/NCSBCS A225.1**, or **Standard for Gas Equipped Recreational Vehicles and Mobile Housing, CSA Z240.4**.

- This appliance has been certified for use with either natural or propane gas. See appropriate data plates.
- This appliance is not for use with solid fuels.
- The appliance is approved for bedroom or bedsitting room installations.
- The appliance must be installed in accordance with local codes if any. If none exist use the current installation code. ANSI Z223.1/NFPA 54 in the USA, CSA B149 in Canada.
- This appliance is mobile home approved.
- The appliance must be properly connected to a venting system.
- The appliance is not approved for closet or recessed installations.

HIGH ELEVATIONS

Input ratings are shown in BTU per hour and are certified without deration for elevations up to 4,500 feet (1,370 m) above sea level.

For elevations above 4,500 feet (1,370 m) in USA, installations must be in accordance with the current ANSI Z223.1/NFPA 54 and/or local codes having jurisdiction.

In Canada, please consult provincial and/or local authorities having jurisdiction for installations at elevations above 4,500 feet (1,370 m).

GAS PRESSURES

	Natural	Propane (LP)
Inlet Minimum	4.5” w.c.	11.0” w.c.
Inlet Maximum	10.5” w.c.	13.0” w.c.
Manifold Pressure	3.5” w.c.	10.0” w.c.

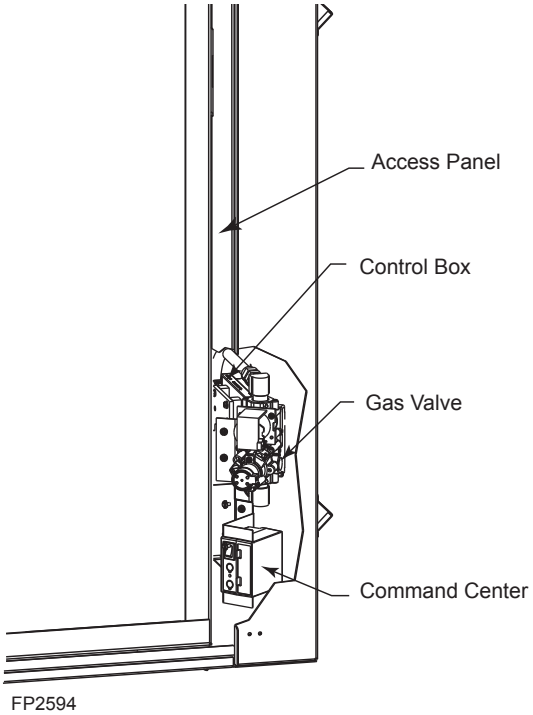

Figure 1 - VHLDV Fireplace Controls

GAS SPECIFICATIONS & ORIFICE SIZE

Model	Fuel	Btu/hr Input		
		Max. All Burners	Min. All Burners	Min. Front Burners Only
VHLDV500NTSC	Nat.	50,000	35,500	17,500
VHLDV500PTSC	LP	50,000	38,500	17,500

Model	Fuel	Orifice Size	
		Front	Rear
VHLDV500	Nat.	2.3 mm	#30 (.1285)
VHLDV500	LP	#50 (.070")	#55 (.052")

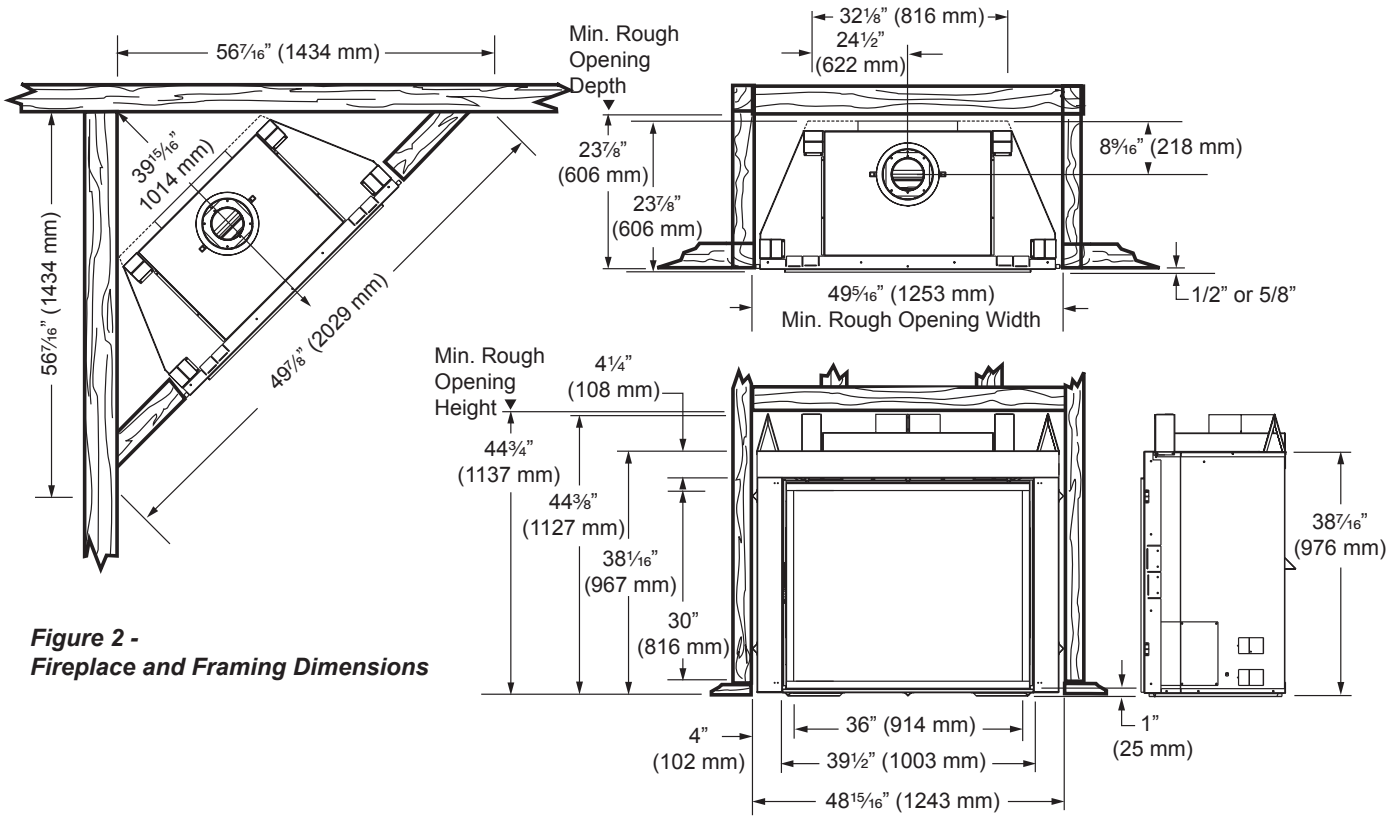

Figure 2 - Fireplace and Framing Dimensions

BEFORE YOU START

Read this homeowner manual thoroughly and follow all instructions carefully. Inspect all contents for shipping damage and immediately inform your dealer if any damage is found. Do not install any unit with damaged, incomplete, or substitute parts. Check your packing list to verify that all listed parts have been received. You should have the following:

- Fireplace (Firebox and Burner System)
- Log Set
- Rock Wool
- Noncombustible Panel

ITEMS REQUIRED FOR INSTALLATION

- Phillips Screwdriver
- Hammer
- Saw and/or saber saw
- Measuring Tape
- Electric Drill and Bits
- Pipe Wrench
- Framing Materials
- Wall Finishing Materials
- Level
- Pliers
- Square
- Tee Joint
- Noncombustible finishing material or dura-rock*
- Caulking Material (noncombustible)
- Fireplace Surround Material (noncombustible)
- Piping Complying with Local Codes
- Pipe Sealant Approved for use with Propane/LPG (Resistant to sulfur compounds)

* Only used if desired to cover painted face other than using tiles or marble. If tiles or marble are used around the face then the non-combustible material is not needed.

FIREBOX FRAMING

Firebox framing can be built before or after the appliance is set in place. Refer to Figure 2 for firebox dimensions and framing. Construct firebox framing following *Figure 2* for your specific installation requirements. The framing headers may rest on the top of the firebox standoffs. Do not bring headers below top of standoffs. **NOTE:** When planning your framing and installation, keep in mind that your gas line will come in on the right side of the box (as you are facing it) and your electricity will come in on the left side.

The firebox may be installed directly on a combustible floor or raised on a platform of an appropriate height. When the firebox is installed directly on carpeting, tile, or other combustible material, other than wood flooring, the firebox shall be installed on a metal or wood panel extending the full width and depth of the enclosure.

WARNING

Unit framing is to be rectangular front to back. Failure to do so will cause fire and damage to property.

WARNING

Do not fill spaces around firebox with insulation or other materials. This could cause a fire.

NOTE

COLD CLIMATE INSULATION

If you live in a cold climate, seal all cracks around your appliance, and wherever cold air could enter the room, with noncombustible material. It is especially important to insulate the outside chase cavity between the studs and under the floor on which the appliance rests, if the floor is above ground level.

FIREPLACE LOCATION

Plan for the installation of your appliance. This includes determining where the unit is to be installed, the vent configuration to be used, framing and finishing details, and whether any optional accessories (i.e. blower, wall switch, or remote control) are desired. Consult your local building code agency to ensure compliance with local codes, including permits and inspections.

The following factors should be taken into consideration:

- Clearance to side-wall, ceiling, woodwork, and windows. Minimum clearances to combustibles **must be maintained.**
- This fireplace may be installed along a wall, across a corner, or use an exterior chase. Refer to *Figure 3* for suggested locations.
- Location should be out of high traffic areas and away from furniture and draperies due to heat from appliance.
- Never obstruct the front opening of the fireplace.
- Do **not** install in the vicinity where gasoline or other flammable liquids may be stored.
- Vent pipe routing. Refer to the *Venting* section found in this manual for allowable venting configurations.
- These units can be installed in a bedroom. See National Fuel Gas Code ANSI Z233.1/NFPA 54 — (current edition), the Uniform Mechanical Code — (current edition), and Local Building Codes for specific installation requirements.
- These units can be installed in a bathroom.

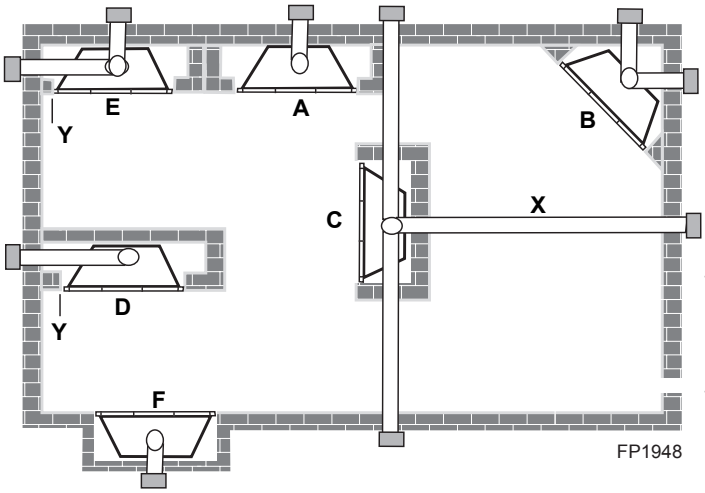

A Flat on Wall
B Cross Corner
C Island**
D Room Divider*
E Flat on Wall Corner*
F Chase Installation
Y 6" Minimum

** Island (C) and room divider (D) installation is possible as long as the horizontal portion of vent system (X) does not exceed 20'. Refer to *Installing Horizontal Termination Configuration* on *Page 15.*

* When you install your fireplace in (D) room divider or (E) flat on wall corner positions (Y), a minimum of 6" clearance must be maintained from perpendicular wall and front of fireplace.

Figure 3 - Locating Gas Fireplace

CLEARANCES TO COMBUSTIBLES

WARNING

Follow these instructions carefully to ensure safe installation. Failure to follow instructions exactly can create a fire hazard.

The appliance cannot be installed on a carpet, tile or other combustible material other than wood flooring. If installed on carpet or vinyl flooring, the appliance shall be installed on a metal, wood or noncombustible material panel extending full width and depth of the appliance.

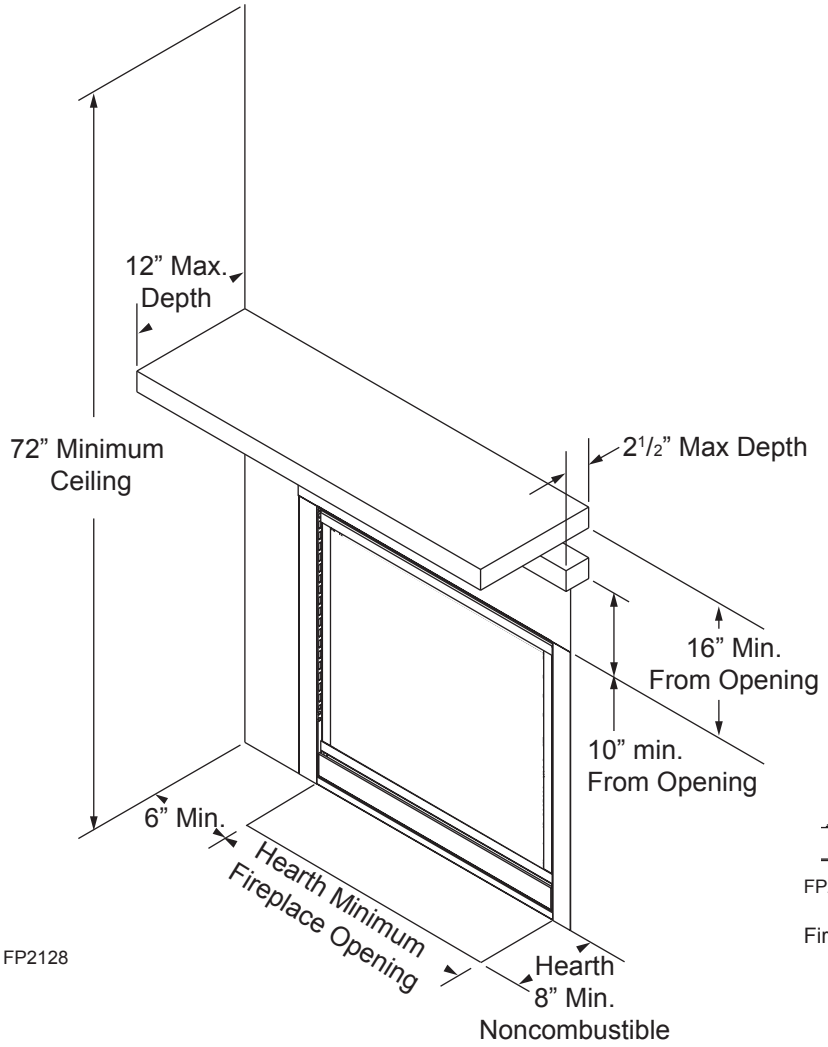

Figure 4 -
Clearances from the mantel, ceiling, and side wall.

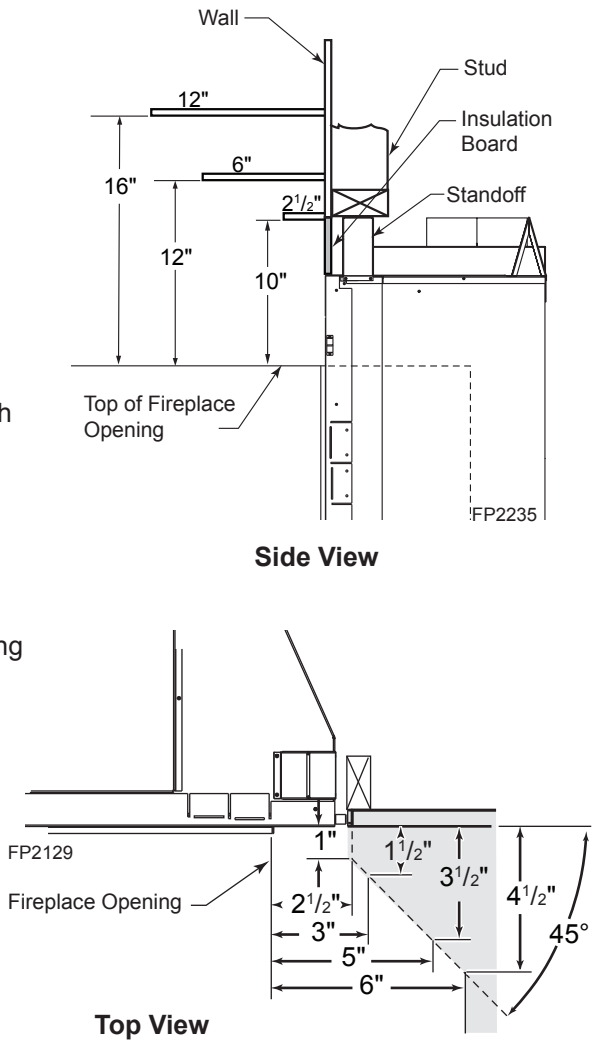

Figure 5 -
Mantel clearances

MANTEL CLEARANCES

NOTE: The combustible area above the facing must not protrude more than 3/4" from the facing. If it does, it is considered a mantel and must meet the mantel requirements listed in this manual.

The fireplace must be secured to the floor and/or to framing studs as shown in *Figure 6.* Use two (2) wood screws or masonry/ concrete screws to secure fireplace to the floor. Use four (4) screws to attach fireplace to framing. The side nailing flanges are 1/2" or 5/8" to accommodate different wall thickness.

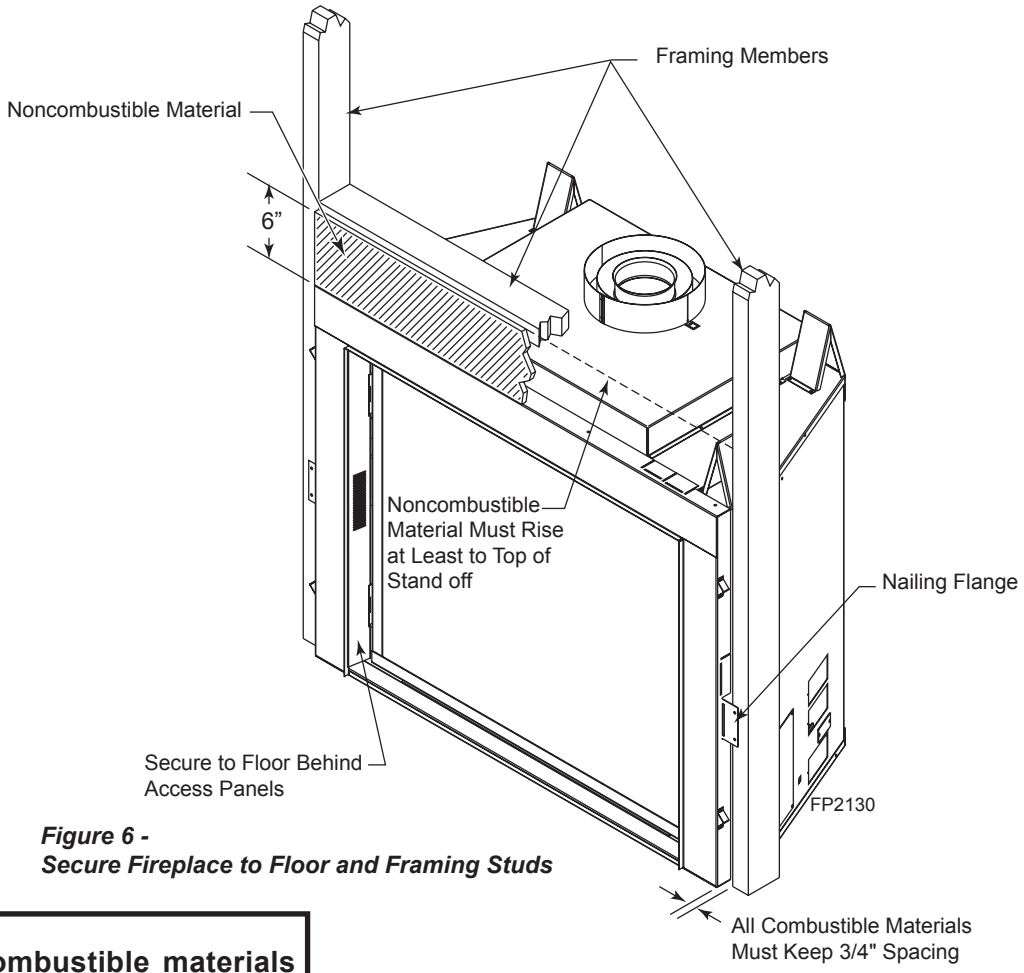

Figure 6 - Secure Fireplace to Floor and Framing Studs

NOTE **Never install combustible materials over front face of fireplace.**

FINISHING MATERIAL

NOTE: Any remote wiring (i.e. remote control, wall switch, and optional fan) must be done prior to final finishing to avoid costly reconstruction.

Only noncombustible materials (i.e. brick, tile, slate, steel, or other materials with a UL fire rating of Zero) may be used to cover the black painted face of the appliance. It is permissible to bring combustible wall board to the top of the stand-offs on the top and the sides of the unit. A 300°F minimum adhesive may be used to attach facing materials to the black surface. If joints between the finished wall and the fireplace surround are sealed, a 300°F minimum sealant material (General Electric RTV103 or equivalent) must be used.

WARNING

Read all instructions completely and thoroughly before attempting installation. Failure to do so could result in serious injury, property damage or loss of life. Operation of improperly installed and maintained venting system could result in serious injury, property damage or loss of life.

INSTALLATION PRECAUTIONS

Consult local building codes before beginning the installation. The installer must make sure to select the proper vent system for installation. Before installing vent kit, the installer must read this fireplace manual and vent kit instructions.

Only a qualified installer/service person should install venting system. The installer must follow these safety rules:

- Wear gloves and safety glasses for protection.
- Use extreme caution when using ladders or when on rooftops.
- Be aware of electrical wiring locations in walls and ceilings.

The following actions will void the warranty on your venting system:

- Installation of any damaged venting component.
- Unauthorized modification of the venting system.
- Installation of any component part not manufactured or approved by MHS.
- Installation other than permitted by these instructions.

NOTICE

Failure to follow these instructions will void the warranty.

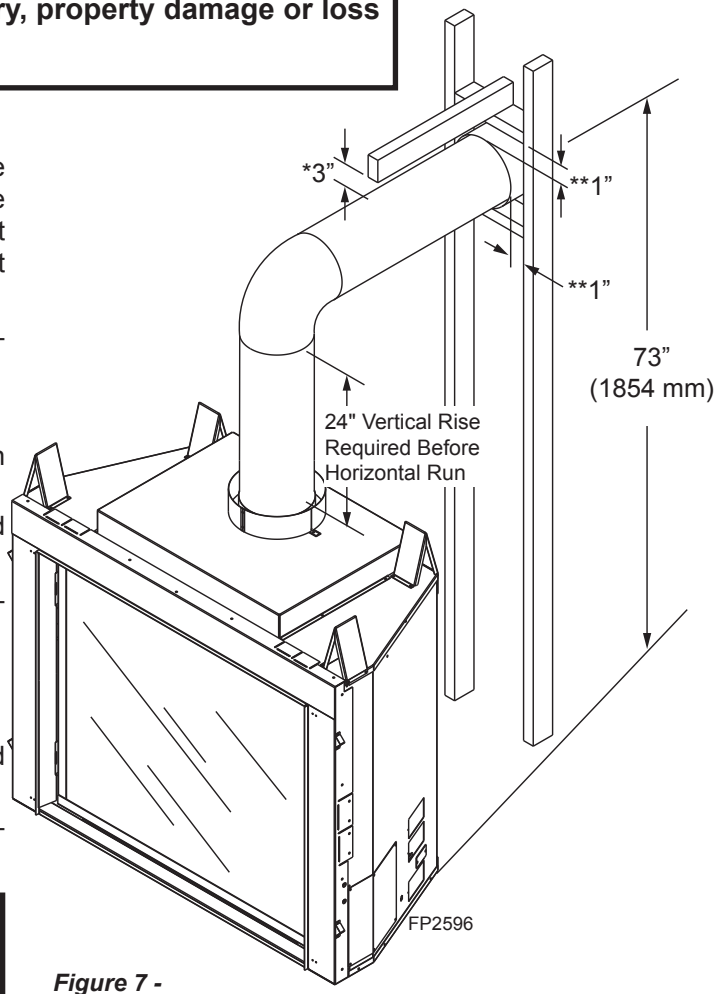

Figure 7 - Combustible Clearances for Vent Pipe

WARNING

This fireplace must be vented to the outside. The venting system must NEVER be attached to a chimney serving a separate solid fuel burning appliance. Each gas appliance must use a separate vent system. Do not use common vent systems.

* A minimum of 3" clearance to the top is required along horizontal length until flue pipe penetrates outside wall.

** A minimum 1" clearance to combustibles permitted all around flue at outside wall

WARNING

Horizontal sections of this vent system require a minimum of 3" clearances to combustibles at the top of the flue and 1" clearance at the sides and bottom *until the flue penetrates the outside wall.* A minimum 1" clearance all around the flue is acceptable at this point of penetration. Unless the vertical run is 7½" or higher from floor of fireplace, the clearance for horizontal run is 1" on all sides.

Vertical sections of this vent system require a minimum of 2" clearance to combustibles at the top of the unit directly above the stand-off. A minimum of 1" clearance all around the flue is acceptable thereafter.

INSTALLATION PLANNING

There are two basic types of direct-vent installation:

- Horizontal Termination
- Vertical Termination

It is important to select the proper length of vent pipe for the type of termination you choose. It is also important to note the wall thickness.

WARNING **Never run the vent pipe down. This may cause excessive temperatures which could cause a fire.**

FOR HORIZONTAL TERMINATION

Select the amount of vertical rise desired. All horizontal run of venting must have 1/4" rise for every 12" of run towards the termination below 7½" of vertical rise from floor of fireplace. With 7½ feet or more of vertical rise form the floor of the fireplace, the horizontal run may be level. NEVER run vent piping down.

You may use up to three 90° elbows in this vent configuration. Refer to Vertical/Horizontal Termination Configurations on Page 16.

FOR VERTICAL TERMINATION

Measure the distance from the fireplace floor to the ceiling. Add the ceiling thickness, the vertical rise in an attic or second story, and allow for sufficient vent height above the roof line.

NOTE: You may use two 45° elbows in place of a 90° elbow. You must follow rise to run ratios when using 45° elbows. The appliance is approved for use with three 90° elbows maximum or a combination of 90° and 45° elbows up to a maximum of 270°.

For two-story applications, firestops are required at each floor level. If an offset is needed in the attic, additional pipe and elbows will be required.

You may use a chase with a vent termination with exposed pipe on the exterior of the house. See *Installing A Vent System in an Outside Chase* below. If pipe is enclosed in chase, it is not exposed.

It is very important that the venting system maintain its balance between the combustion air intake and the flue gas exhaust. Certain limitations apply to vent configurations and must be strictly followed.

INSTALLING A VENT SYSTEM IN AN OUTSIDE CHASE

A chase is a vertical boxlike structure built to enclose venting that runs along the outside of a building. A chase is required for such venting.

NOTICE **Treatment of firestops and construction of the chase may vary from building type to building type. These instructions are not substitutes for the requirements of local building codes. You must follow all local building codes.**

NOTICE **When installing in a chase, you should insulate the chase as you would the outside walls of your home. This is especially important in cold climates. Insulation should be considered a combustible material. Maintain proper clearances to all combustible materials.**

WARNING **Always maintain minimum clearances around vent systems. The minimum clearances to combustibles for horizontal vent pipe are 3" at the top* and 1" at the sides and bottom of the vent system until the pipe penetrates the nearest vertical wall (1" required). A 1" minimum clearance all around the pipe must be maintained at outside wall and on vertical runs. Do not pack the open air spaces with insulation or other materials. This could cause high temperatures and may present a fire hazard.**
***Unless the vertical run is 7½ feet or higher from floor of fireplace, the clearance for the horizontal run is 1" on all sides.**

GENERAL VENTING INFORMATION - TERMINATION LOCATION

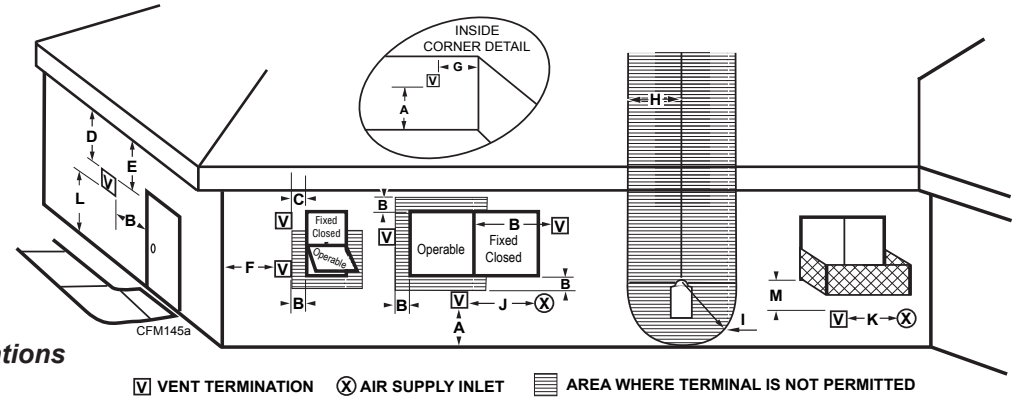

Figure 8 - Termination Locations

	Canadian Installations[1]	US Installations[2]
A = Clearance above grade, veranda, porch, deck, or balcony	12” (30 cm)	12” (30 cm)
B = Clearance to window or door that may be opened	6” (15 cm) for appliances < 10,000BTU/h (3kW), 12” (30 cm) for appliances > 10,000 Btuh (3kW) and < 100,000 BTU/h (30kW), 36” (91 cm) for appliances > 100,000 BTU/h (30kW)	6” (15 cm) for appliances < 10,000 BTU/h (3kW), 9” (23 cm) for appliances > 10,000 Btuh (3kW) and < 50,000 BTU/h (15kW), 12” (30 cm) for appliances > 50,000 BTU/h(15kW)
C = Clearance to permanently closed window	12” (305 mm) recommended to prevent window condensation	12” (305 mm) recommended to prevent window condensation
D = Vertical clearance to ventilated soffit located above the terminal within a horizontal distance of 2’ (610mm) from the center line of the terminal	18” (458 mm)	18” (458 mm)
E = Clearance to unventilated soffit	12” (305 mm)	12” (305 mm)
F = Clearance to outside corner	see next page	see next page
G = Clearance to inside corner (see next page)	see next page	see next page
H = Clearance to each inside of center line extended above meter/regulator assembly	3’ (91 cm) within a height of 15’ (5 m) above the meter/regulator assembly	3’ (91 cm) within a height of 15’ (5 m) above the meter/regulator assy
I = Clearance to service regulator vent outlet	3’ (91 cm)	3’ (91 cm)
J = Clearance to nonmechanical air supply inlet to building or the combustion air inlet to any other appliances	6” (15 cm) for appliances < 10,000 BTU/h (3kW), 12” (30 cm) for appliances > 10,000 BTU/h (3kW) and < 100,000 Btuh (30kW), 36” (91 cm) for appliances > 100,000 BTU/h (30kW)	6” (15 cm) for appliances < 10,000 BTU/h (3kW), 9” (23 cm) for appliances > 10,000 BTU/h (3kW) and < 50,000 BTU/h (15kW), 12” (30 cm) for appliances > 50,000 BTU/h(15kW)
K = Clearance to a mechanical air supply inlet	6’ (1.83 m)	3’ (91 cm) above if within 10' (3 m) horizontally
L = Clearance above paved sidewalk or paved driveway located on public property	7’ (2.13 m)†	7’ (2.13 m)†
M = Clearance under veranda, porch, deck or balcony	12” (30 cm)‡	12” (30cm)‡

1 In accordance with the current CSA-B149 Installation Codes
2 In accordance with the current ANSI Z223.1/NFPA 54 National Fuel Gas Codes
† A vent shall not terminate directly above a sidewalk or paved driveway which is located between two single family dwellings and serves both dwellings
‡ only permitted if veranda, porch, deck or balcony is fully open on a minimum 2 sides beneath the floor:

NOTE: 1. Local codes or regulations may require different clearances.
2. The special venting system used on Direct Vent Fireplaces are certified as part of the appliance, with clearances tested and approved by the listing agency.
3. MHSC assumes no responsibility for the improper performance of the appliance when the venting system does not meet these requirements.

TERMINATION CLEARANCES FOR BUILDINGS WITH COMBUSTIBLE AND NONCOMBUSTIBLE EXTERIORS

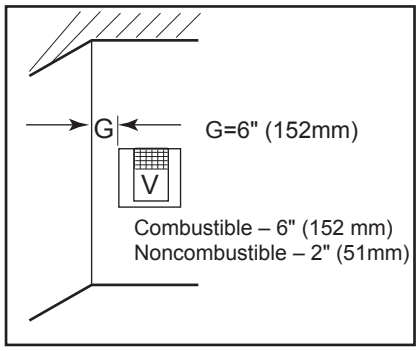

Inside Corner

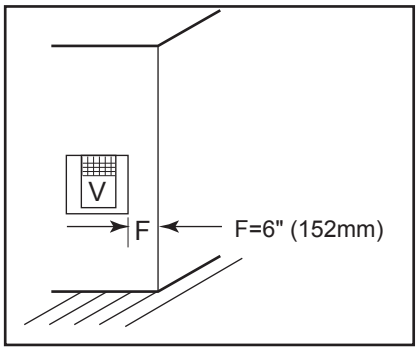

Outside Corner

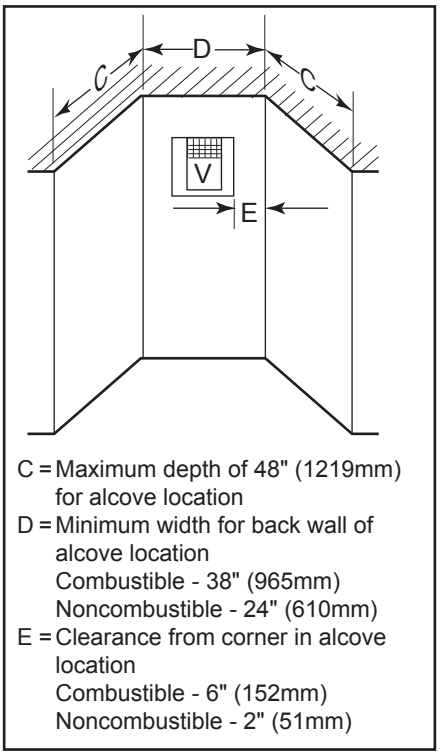

Alcove Location

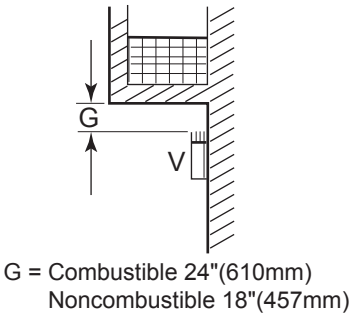

Balcony with No Side Wall

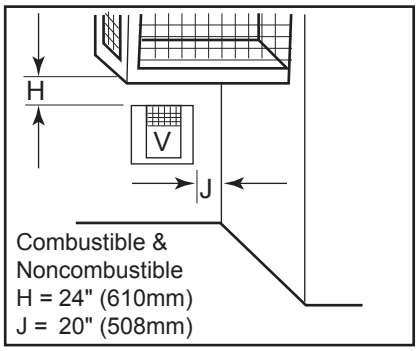

Balcony with Perpendicular Side Wall

Figure 9 - Allowable Venting Chart

HOW TO USE THE VENT GRAPH

The Vent Graph should be read in conjunction with the following vent installation instructions to determine the relationship between the vertical and horizontal dimensions of the vent system.

1. Determine the height of the center of the horizontal vent pipe exiting through the outer wall. Using this dimension on the Sidewall Vent Graph below, locate the point intersecting with the slanted graph line.
2. From the point of this intersection, draw a vertical line to the bottom of the graph.
3. Select the indicated dimension, and position the fireplace in accordance with same.

   Example: If the vertical dimension from the floor of the fireplace is 11' (3.4 m) the horizontal run to the face of the outer wall must not exceed 16' (4.9 m).

Sidewall Vent Graph showing the relationship between vertical and horizontal dimensions for a Direct Vent flue system.

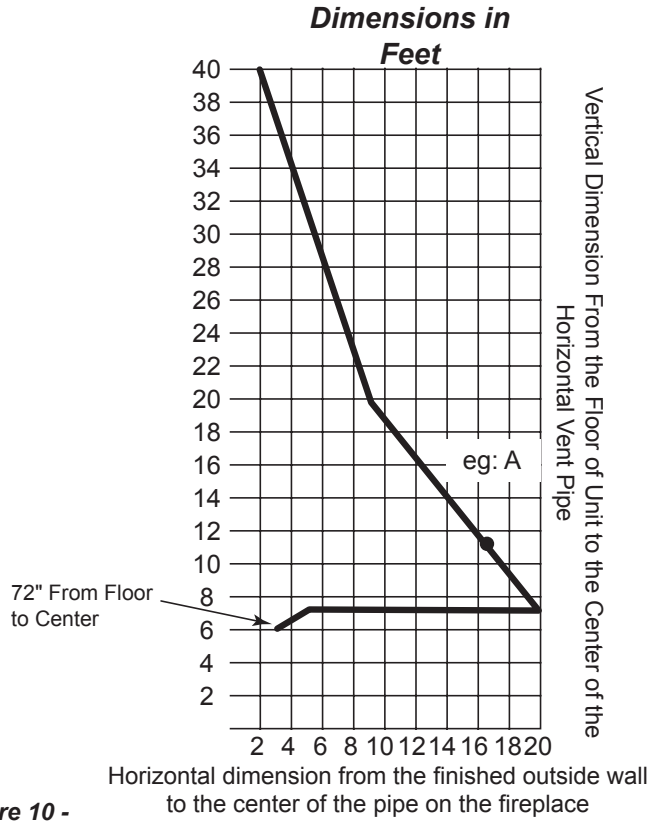

Figure 10 - Rear Wall Venting Graph

VERTICAL SIDEWALL INSTALLATION

Step 1

Locate vent opening on the wall. It may be necessary to first position the fireplace and measure to obtain hole location. Depending on whether the wall is combustible or noncombustible, cut opening to size. *Figure 11* (For combustible walls first frame in opening.)

Combustible Walls: Cut a 10½"H x 10½"W (267 x 267 mm) hole through the exterior wall and frame as shown. *Figure 11*

Noncombustible Walls: Hole opening must be 8½" (216 mm) in diameter.

Vent Opening for Combustible Walls

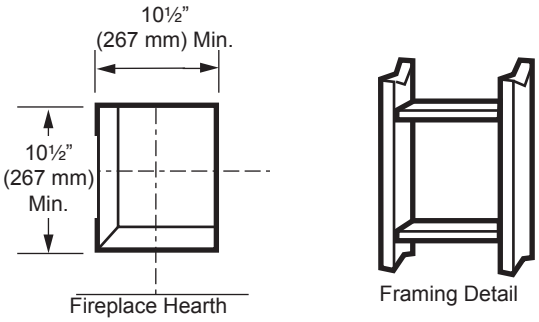

Opening for Noncombustible Wall

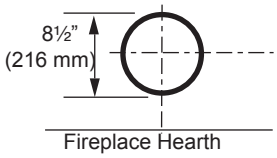

FP2293

Figure 11 - Locate vent opening on wall

Step 2

Secure firestop to the inside frame, center in the 10½" x 10½" vent opening.

Step 3

Place fireplace into position. Measure the vertical height (X) required from the base of the flue collars to the center of the wall opening. *Figure 12*

Step 4

Using appropriate length of pipe section(s) attach to fireplace with three (3) screws. Follow with the installation of the elbow.

Step 5

Measure the horizontal length requirement figuring a 1¼" (32 mm) overlap, i.e. from the elbow to the outside wall cap. *Figure 13*

Always install horizontal venting on a level plane.

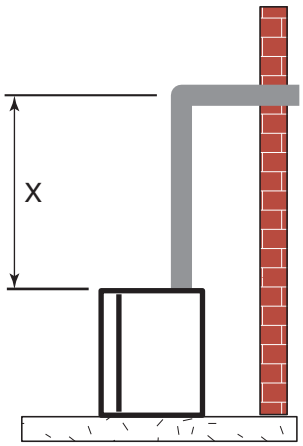

Figure 12 - Vertical Height Requirement

FP1181

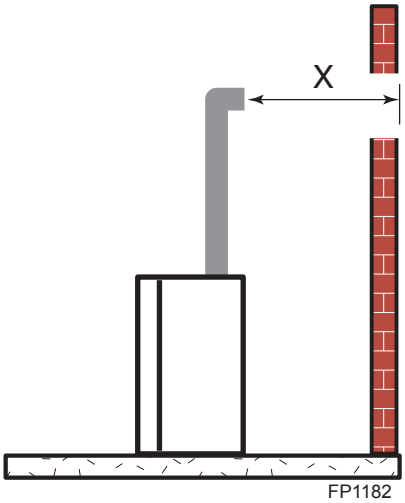

Figure 13 - Horizontal Length Requirement

FP1182

Step 6

Use appropriate length of pipe sections - telescopic or fixed - and install.

Sealing vent pipe and firestop gaps with high temperature sealant will restrict cold air being drawn in around fireplace.

Step 7

Guide the vent terminations 5" and 8" collard into their respective vent pipes. Double check that the vent pipes overlap the collars by a minimum of 1¼" (32 mm). Secure the termination to the wall with screws provided and caulk around the wall plate to weatherproof. As an alternative to screwing the termination directly to the wall, you may also use expanding plugs or an approved exterior construction adhesive.

Support horizontal pipes every 36" (914 mm) with metal pipe straps.

VERTICAL/HORIZONTAL TERMINATION CONFIGURATIONS

Since it is very important that the venting system maintain its balance between the combustion air intake and the flue gas exhaust, certain limitations as to vent configurations apply and must be strictly adhered to.

The Vent Graph, showing the relationship between vertical and horizontal side wall venting, will help to determine the various dimensions allowable. *Figure 10*

NOTE: Horizontal sections of this vent system require a minimum of 3" clearances to combustibles at the top of the flue and 1" clearance at the sides and bottom until the flue penetrates the outside wall. A minimum 1" clearance all around the flue is acceptable at this point of penetration. Unless the vertical run is 7½ feet or higher from floor of fireplace, the clearance for the horizontal run is 1" on all sides.

Vertical sections of this vent system require a minimum of 1" clearance to combustibles on all sides of the pipe.

When vent exits through foundations less than 20" below outcrop, the termination must be flush up with outcropped wall above.

It is best to locate the fireplace in such a way that minimizes the number of offsets and horizontal vent length.

The horizontal vent run refers to the total length of vent pipe from the flue collar of the fireplace (or the top of the Transition Elbow) to the face of the finished outside wall.

- The maximum number of 90° elbows per side wall installation is three (3). *Figure 14*

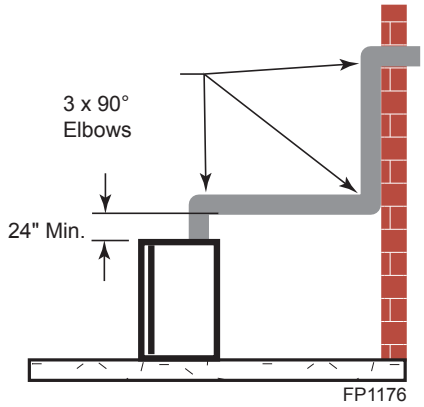

Figure 14 -
Maximum Three (3) 90° Elbows Per Installation

- A minimum of 24" is required before a 90° elbow. If a 90° elbow is fitted directly after 24" vertical section mounted to the top of the fireplace, the maximum horizontal vent run before the termination or a vertical rise is 36" (914 mm). *Figure 15*

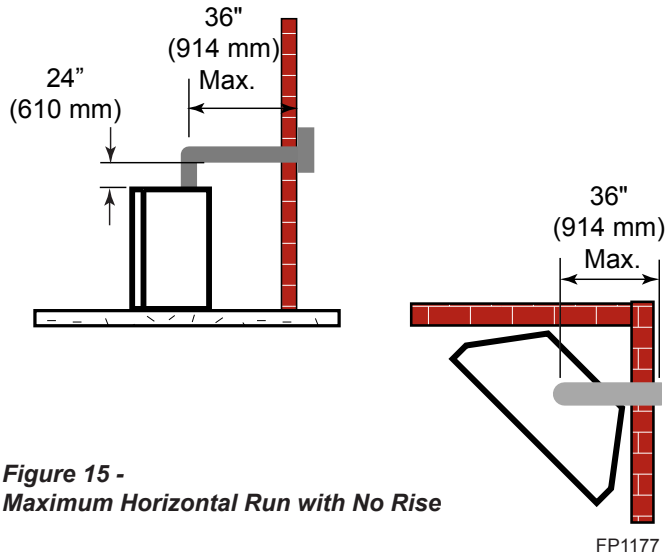

Figure 15 -
Maximum Horizontal Run with No Rise

- If a 90° elbow is used in the horizontal vent run (level height maintained) the horizontal vent length is reduced by 36". *Figures 14 and 15.* This does not apply if the 90° elbows are used to increase or redirect a vertical rise. *Figure 16*

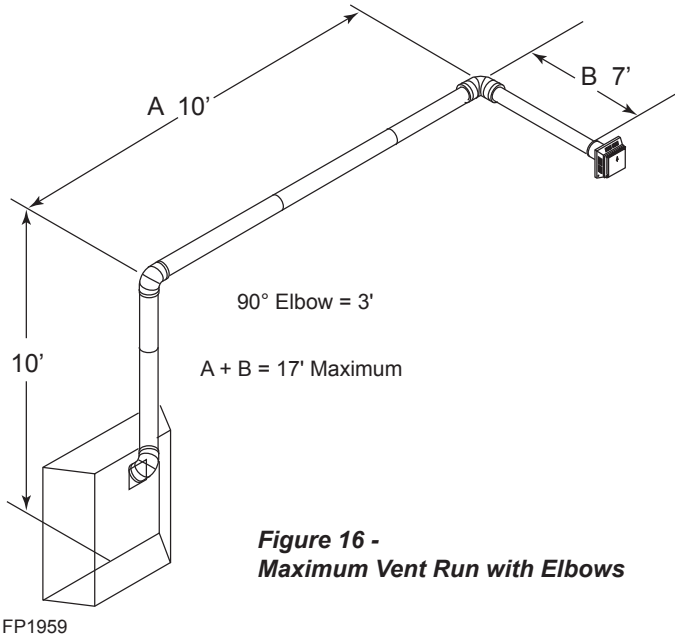

Figure 16 -
Maximum Vent Run with Elbows

Example: According to the vent graph (Page 14) the maximum horizontal vent length in a system with a 10' vertical rise is 20' (6 m) and if a 90° elbow is required in the horizontal vent it must be reduced to 17' (5.2 m).

In *Figures 16 and 17* dimension A plus B must not be greater than 17' (5.2 m).

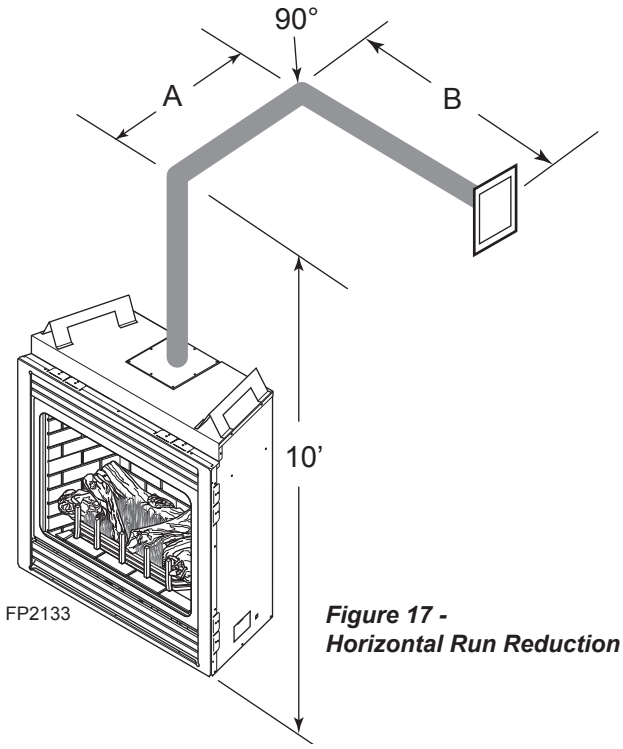

Figure 17 - Horizontal Run Reduction

- The maximum number of 45° elbows permitted per side wall installation is two (2). These elbows can be installed in either the vertical or horizontal run.
- For each 45° elbow installed in the horizontal run, the length of the horizontal run MUST be reduced by 18" (45 cm). This does not apply if the 45° elbows are installed on the vertical part of the vent system.
- The maximum number of elbow degrees in a system is 270°. *Figure 18*

Example:	Elbow 1	=	90°
	Elbow 2	=	45°
	Elbow 3	=	45°
	Elbow 4	=	90°
Total Angular Variation		=	270°

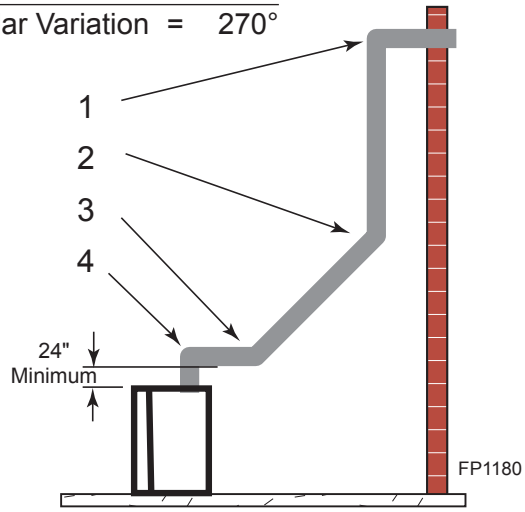

Figure 18 - Maximum Elbow Usage

BELOW GRADE INSTALLATIONS

When it is not possible to meet the required vent terminal clearances of 12" above grade level, a snorkel kit is recommended. It allows installation depth down to 7" (178mm) below grade level. The 7" (178mm) is measured from the center of the horizontal vent pipe as it penetrates through the wall.

Ensure that sidewall venting clearances are observed. If venting system is installed below ground, we recommend a window well with adequate and proper drainage to be installed around the termination area.

If installing a snorkel, a minimum 24" vertical rise is necessary. The maximum horizontal run with the 24" vertical pipe is 36". This measurement is taken from the collar of the fireplace (or transition elbow) to the face of the exterior wall. See the Sidewall Venting Graph for extended horizontal run if the vertical exceeds 24".

1. Establish vent hole through the wall.
2. Remove soil to a depth of approximately 16" below base of snorkel. Install drain pipe. Install window well (not supplied). Refill hole with 12" of coarse gravel leaving a clearance of approximately 4" below snorkel. *Figure 19*
3. Install vent system.
4. Ensure a watertight seal is made around the vent pipe coming through the wall.
5. Apply high temperature sealant caulking (supplied) around the 5" and 8" snorkel collars.
6. Slide the snorkel into the vent pipes and secure to the wall.
7. Level the soil so as to maintain a 4" clearance below snorkel. *Figure 19*

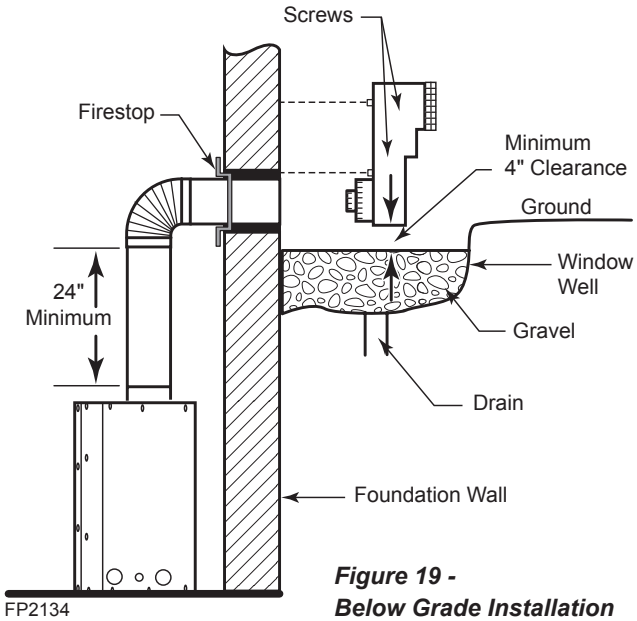

Figure 19 - Below Grade Installation

If the foundation is recessed, use recess brackets (not supplied) for securing lower portion of the snorkel. Fasten brackets to wall first, then secure to snorkel with self drilling #8 x 1/2 sheet metal screws. It will be necessary to extend vent pipes out as far as the protruding wall face. *Figure 20*

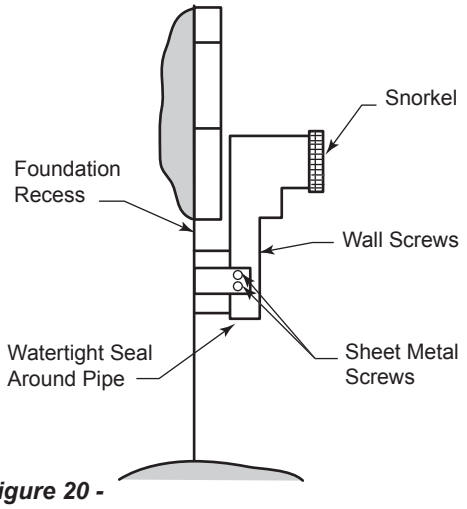

Figure 20 - Snorkel Installation, Recessed Foundation

WARNING

- **Do not back fill around snorkel.**
- **A clearance of at least 4" must be maintained between the snorkel and the soil.**

VERTICAL THROUGH-THE-ROOF APPLICATIONS

NOTICE

A restrictor disc must be installed on vertical terminations that are higher than 12' (366 cm).

Install restrictor disc as shown in *Figure 21* for vertically vented applications.

Up to two (2) restrictor discs may be needed for 40' installation.

The two (2) restrictor discs suppled will work for most installations. If a third disc is needed order Part No. 56D3027.

This gas fireplace has been approved for,

- Vertical installations up to 40' (12 m) in height. Up to a 10' (3 m) horizontal vent run can be installed within the vent system using a maximum of two 90° elbows. *Figure 22*

NOTE: Horizontal sections of this vent system require a minimum of 3" clearances to combustibles at the top of the flue and 1" clearance at the sides and bottom until the flue penetrates the outside wall. A minimum 1" clearance all around the flue is acceptable at this point of penetration. Unless the vertical run is 7½ feet or higher form floor of fireplace, the clearance for the horizontal run is 1" on all sides.

Figure 21 - Install Restrictor Disc into Fireplace Collar

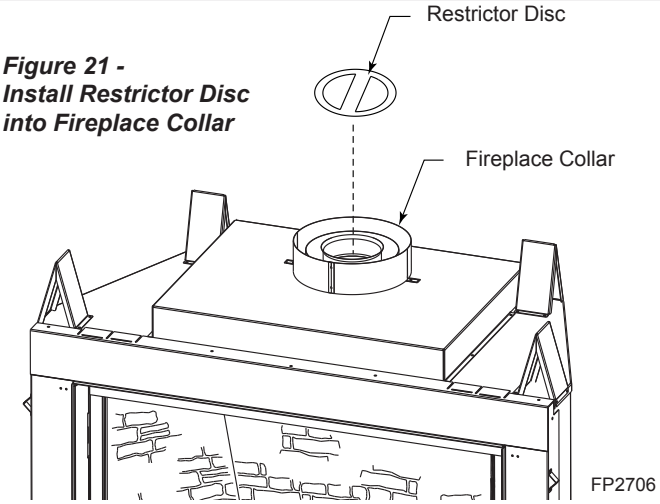

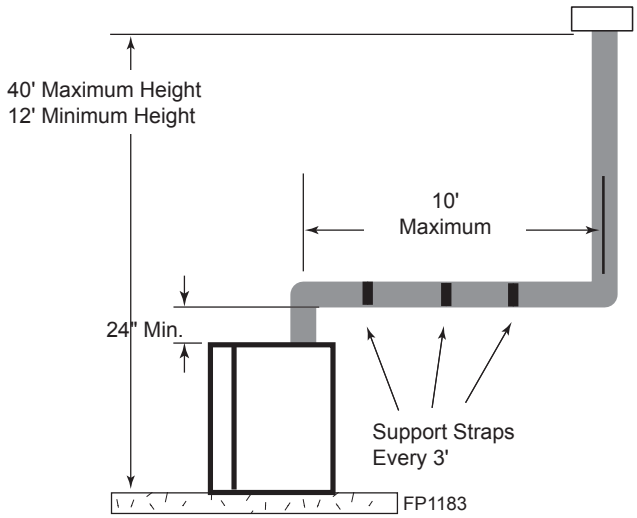

Figure 22 - Support Straps for Horizontal Runs

Vertical sections of this vent system require a minimum of 1" clearance to combustibles on all sides of the pipe.

- Up to two 45° elbows may be used within the horizontal run. For each 45° elbow used on the horizontal plane, the maximum horizontal length must be reduced by 18" (450 mm).

Example: Maximum horizontal length

No elbows	=	10' (3 m)
1x45° elbows	=	8.5' (2.6 m)
2x45° elbows	=	7' (2.1 m)

- A minimum of an 8' (2.5 m) vertical rise is required.
- Two sets of 45°elbows offsets may be used within the vertical sections. From 0 to a maximum of 8' (2.5 m) of vent pipe can be used between elbows. *Figure 23*
- The maximum angular variation allowed in the system is 270°. *Figure 23*
- The minimum height of the vent above the highest point of penetration through the roof is 2' (610 mm).

Example:	Elbow 1	=	90°
	Elbow 2	=	45°
	Elbow 3	=	45°
	Elbow 4	=	90°
Total Angular Variation		=	270°

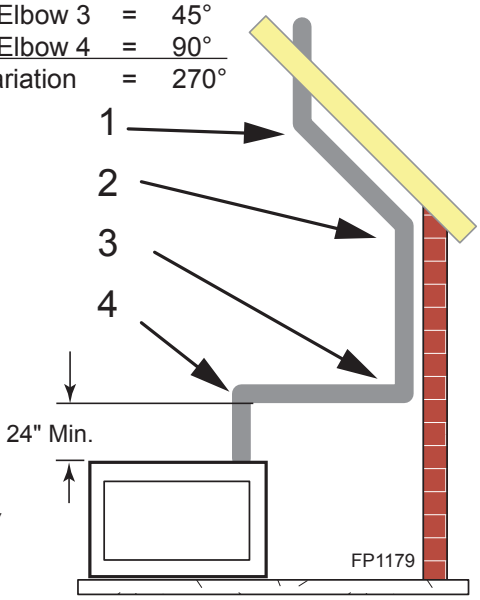

Figure 23 - Maximum Elbow Usage

INSTALLATION FOR VERTICAL TERMINATION

1. Determine the route your vertical venting will take. If ceiling joist, roof rafters or other framing will obstruct the venting system, consider an offset. *Refer to Figure 24* to avoid cutting load bearing members.

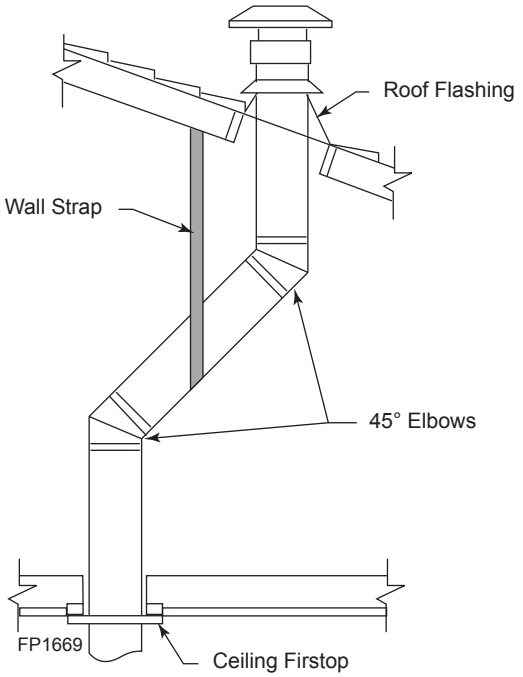

Figure 24 - Offset with Wall Strap and 45° Elbows

For optimal flame appearance, a restrictor disc is necessary on straight vertical runs of 10' of more.

- Runs may not incorporate elbows.
- The disc is part number 56D3027 and is included in installation manual packet.
- Drop the disc into a 5" inner collar before installing the first section of flue or install at the last section before installing the termination. Or disc may be installed from inside firebox into the 5" inner collar.
- An additional disc may be installed on runs of 35' or more. Rotate discs perpendicular to each other.

NOTE: Pay special attention to these installation instructions for required clearances (air space) to combustibles when passing through ceilings, walls, roofs, enclosures, attic rafters, etc. Do not pack air spaces with insulation. Also note maximum vertical rise of the venting system and any maximum horizontal offset limitations. Offsets must fall within the parameters shown in *Figures 23 and 24*.

2. Set fireplace in desired location. Drop a line plumb down from the ceiling to the position of the flue exit. Mark the center point where the vent will penetrate the ceiling. Drill a small locating hole a this point.

   Drop a plumb line from the inside of the roof to the ceiling locating hole in the ceiling. Mark the center point where the vent will penetrate the roof. Drill a small locating hole at this point.

FLAT CEILING INSTALLATION

1. Cut a 10½" (241 mm) square hole in the ceiling using the locating hole as a center point The opening should be framed to 10½"x10½" (241 x 241 mm) inside dimensions as shown in *Figure 26* using framing lumber the same size as the ceiling joist. If the area above the ceiling is an insulated ceiling or a room, nail firestop from the top side. This prevents loose insulation from falling into the required clearance space. *Figure 25.* Otherwise, install firestop below the framed hole. *Figure 26*

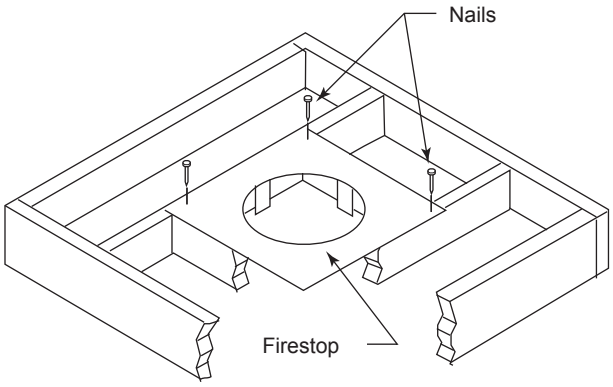

Figure 25 - If Area Above is a Room, Install Firestop above Framed Hole as Shown

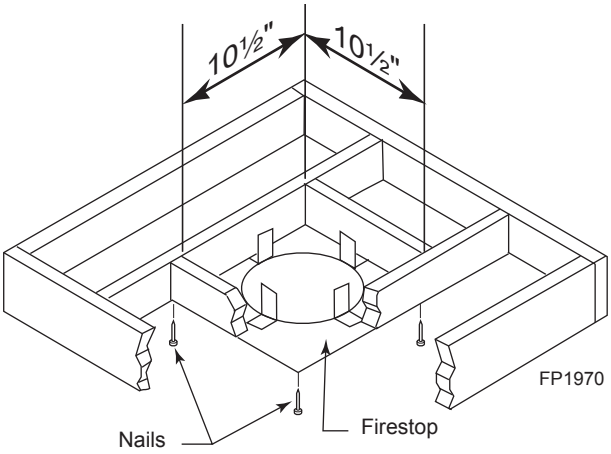

Figure 26 - If Area Above is Not a Room, Install Firestop above Framed Hole as Shown

2. Assemble the desired lengths of pipe and elbows necessary to reach from the burner system flue up through the firestop. Be sure pipe and elbow connections are fully twist-locked.
3. Cut a hole in the roof using the locating hole as a center point. (Cover any exposed open vent pipes before cutting hole in roof). The 10½"x10½" (241mm x 241mm) hole must be measured on the horizontal. Actual length may be larger depending on the pitch of the roof. There must be a 1" minimum clearance from the vent pipe to combustible materials. (Insulation should be considered a combustible material).

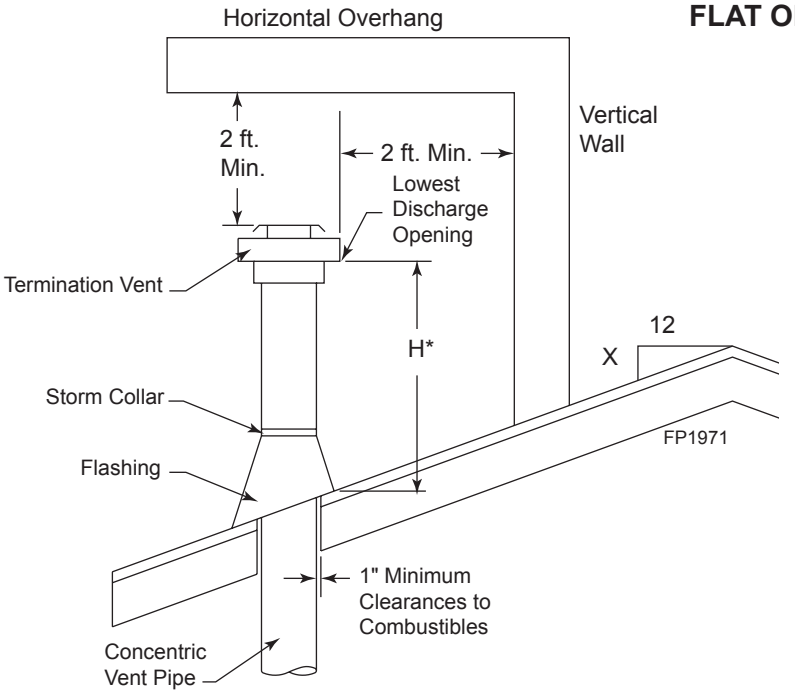

Figure 27 - Minimum Chimney Clearance

4. Connect a section of pipe and extend up through the hole.

NOTE: If an offset is needed to avoid obstructions, you must support the vent pipe every three (3) feet. Use wall straps for this purpose. Refer to *Page 18, Figure 22*. Whenever possible, use 45° elbows instead of 90° elbows. The 45° elbow offers less restriction to the flow of the flue gases and intake air.

5. Place the flashing over the pipe section(s) extending through the roof. Secure the base of the flashing to the roof and framing with roofing nails. Be sure roofing material overlaps the top edge of the flashing. There must be a 1" clearance from the vent pipe to combustible materials.
6. Continue to add pipe sections until the height of the vent cap meets the minimum building code requirements.

NOTE: You must increase vent height for steep roof pitches. Nearby trees, adjoining roof lines, steep pitched roofs, and other similar factors may cause poor draft or down-drafting in high winds. Increasing the vent height may solve this problem.

NOTE: If the vent pipe passes through any occupied areas above the first floor, including storage spaces and closets, you must enclose pipe. You may frame and sheetrock the enclosure with standard construction material. Make sure to meet the minimum allowable clearances to combustibles. Do not fill any of the required clearance spaces with insulation.

TERMINATION HEIGHTS FOR VENTS ABOVE FLAT OR SLOPED ROOFS

Roof Pitch	H (feet)
Flat to 6/12	1.0
Over 6/12 to 7/12	1.25
Over 7/12 to 8/12	1.5
Over 8/12 to 9/12	2.0
Over 9/12 to 10/12	2.5
Over 10/12 to 11/12	3.25
Over 11/12 to 12/12	4.0

*H - Minimum height from roof to lowest discharge opening of vent

CHECK GAS TYPE

Use proper gas type for the fireplace you are installing. If you have conflicting gas type, do not install fireplace. See dealer where you purchased the fireplace for proper fireplace for your gas type or conversion kit.

INSTALLING GAS PIPING TO FIREPLACE / BURNER SYSTEM LOCATION

WARNING

A qualified installer or service person must connect appliance to gas supply. Follow all local codes.

CAUTION

For propane/LP units, never connect fireplace directly to the propane/LP supply. This burner system requires an external regulator (not supplied). Install the external regulator between the burner system and propane/LP supply.

INSTALLATION ITEMS NEEDED

Before installing fireplace and burner system, make sure you have the items listed below.

- External regulator (supplied by installer)
- Sealant (resistant to propane/LP gas)
- Sediment trap (recommended)
- Tee joint
- Piping (check local codes)
- Test gauge connection*
- Pipe wrench
- Equipment shutoff valve*
- Approved flexible gas line with gas connector (if allowed by local codes — not provided)

* A CSA design-certified equipment shutoff valve with 1/8" NPT tap is an acceptable alternative to test gauge connection. Purchase the CSA design-certified equipment shutoff valve from your dealer.

For propane/LP connections only, the installer must supply an external regulator. The external regulator will reduce incoming gas pressure. You must reduce incoming gas pressure to between 11 and 13 inches of water. If you do not reduce incoming gas pressure, burner system regulator damage could occur. Install external regulator with the vent pointing down as shown in *Figure 28.* Pointing the vent down protects it from freezing rain or sleet.

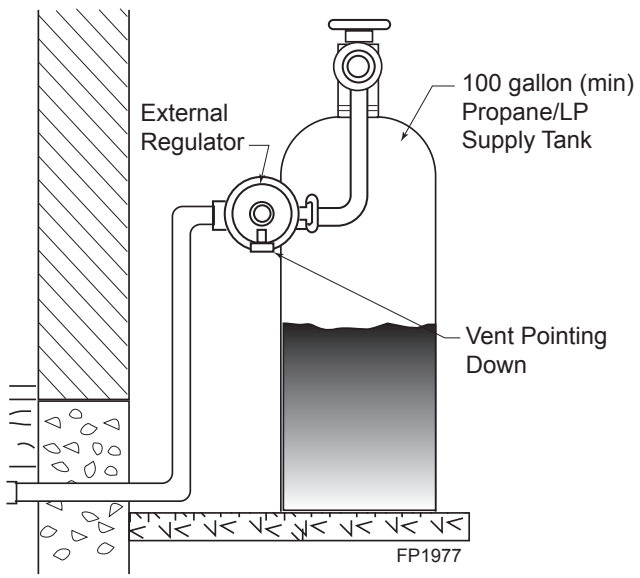

Figure 28 - External Regulator with Vent Pointing Down (Propane/LP Only)

CAUTION

Use only new black iron or steel pipe. Internally tinned copper or copper tubing can be used per National Fuel Code, section 2.6.3, providing gas meets hydrogen sulfide limits, and where permitted by local codes. Gas piping system must be sized to provide minimum inlet pressure (listed on data plate) at the maximum flow rate (BTU/hr). Undue pressure loss will occur if the pipe is too small.

When using copper of flex connectors use only fittings approved for gas connections. The gas control inlet is 3/8" NPT.

WARNING

Only persons licensed to work with gas piping may make the necessary gas connections to this appliance.

CAUTION

A manual shutoff valve must be installed upstream of the appliance. Union tee and plugged 1/8" NPT pressure tapping point should be installed upstream of the appliance. *Figure 29*

NOTE: The gas line connection may be made using 1/2" rigid tubing or an approved flex connector. Since some municipalities have additional local codes it is always best to consult your local authorities and the current edition of the National Fuel Gas Code ANSI.Z223.1, NFPA54. In Canada CSA-B149 (1 or 2) Installation Code.

A listed manual shutoff valve must be installed upstream of the appliance. Union tee and plugged 1/8" NPT pressure tapping point should be installed upstream of the appliance. *Figure 29*

CAUTION

Use pipe joint sealant that is resistant to liquid petroleum (LP) gas.

IMPORTANT: Install main gas valve (equipment shutoff valve) in an accessible location. The main gas valve is for turning on or shutting off the gas to the fireplace.

Check your building codes for any special requirements for locating equipment shutoff valve to fireplaces.

Apply pipe joint sealant lightly to male threads. This will prevent excess sealant from going into pipe. Excess sealant in pipe could result in clogged burner system valves.

We recommend that you install a sediment trap/drip leg in supply line as shown in *Figure 29*. Locate sediment trap/drip leg where it is within reach for cleaning. Install in piping system between fuel supply and burner system. Locate sediment trap/drip leg where trapped matter is not likely to freeze. A sediment trap collects moisture and contaminants and keeps them from going into the burner system gas controls. If sediment trap/drip leg is not installed or is installed wrong, burner system may not run properly.

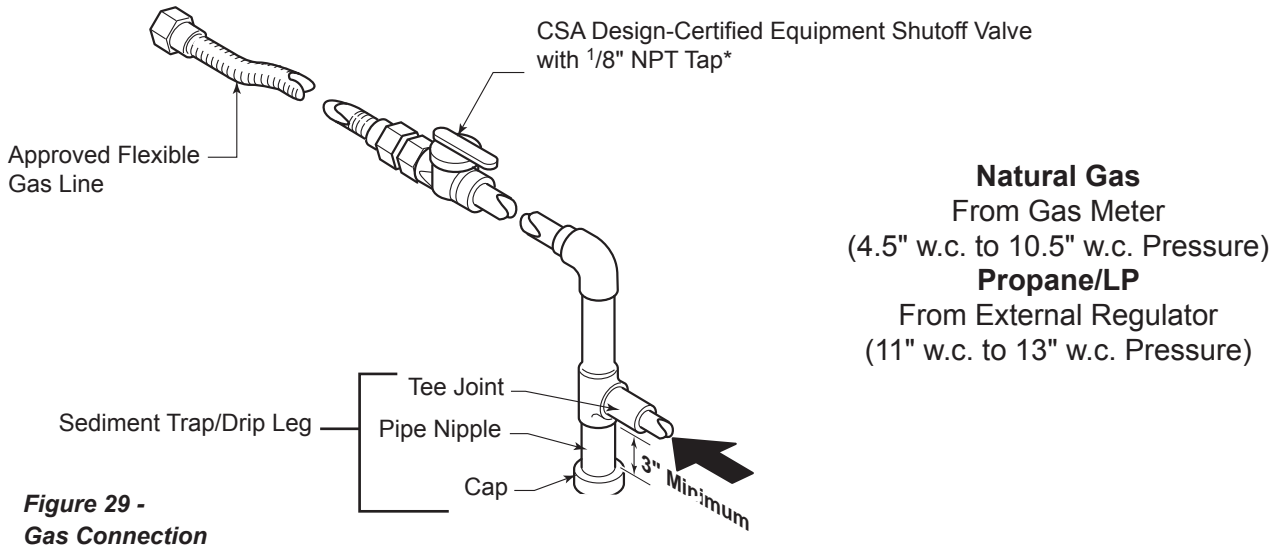

Figure 29 - Gas Connection

1. Check gas type. The gas supply must be the same as stated on the appliance's rating decal. If the gas supply is different from the fireplace, **STOP!** Do not install the appliance. Contact your dealer immediately.
2. To ease installation, a 24" (610 mm) flex line with manual shut-off valve has been provided with on this appliance. Install and attach 1/2" gas line onto shut-off valve.
3. After completing gas line connection, purge air from gas line and test all gas joints from the gas meter to the fireplace for leaks. Use a solution of 50/50 water and soap solution or a gas sniffer.
4. To check gas pressures at valve, turn captured screw counter clockwise 2 or 3 turns and then place tubing to pressure gauge over test point. Turn unit to high. *Figure 30* After taking pressure reading, be sure and turn captured screw clockwise firmly to reseal. Do not over torque. Check test points for gas leaks.

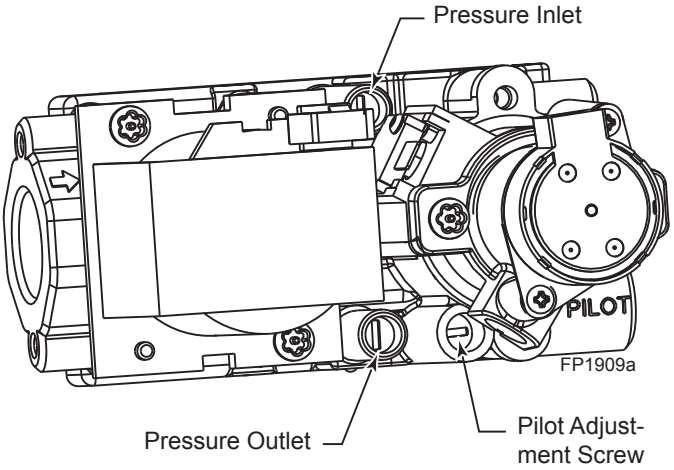

Figure 30 - Signature Command Valve

WARNING

Do not use open flame to check for gas leaks.

ELECTRICAL WIRING

General

1. This fireplace is equipped with the Signature Control valve which operates on 6 volts. The AC adapter plugs into the fireplace junction box A/C power supply. Four (4) "AA" batteries are used for back up during power outages.
2. The Signature Command System can also be operated without A/C power. The system can run on four (4) "AA" batteries for approximately six (6) months under normal use.
3. A/C power must be used to power the A/C module, blowers, lights and AUX accessories used with this fireplace.

Optional Accessory Requirements

1. This fireplace may be used with a wall switch and/or Signature Command wireless controls.
2. The command center control may be mounted on the wall with the use of the SCSWEK 15ft. wall mount extension kit.

WARNING

Electrical connections should only be performed by a qualified, licensed electrician. Main power must be off when connecting to main electrical power supply or performing service. All wiring shall be in compliance with all local, city and state codes. The appliance, when installed, must be electrically grounded in accordance with local codes or in the absence of local codes, with the National Electrical Code ANSI/NFPA 70 (latest edition) and Canadian Electrical Code, CSA C22.1.

CAUTION

Label all wires before disconnecting when servicing controls. Wiring errors can cause improper and dangerous operation.

JUNCTION BOX WIRING

1. This should be done before framing the fireplace. Wire the receptacle into an electrical circuit. Wire with minimum 60° C wire in accordance with prevailing codes.
2. Remove the external junction box cover by removing the screw from the side of the outside firebox wall. Junction box was installed at the factory.
3. The junction box cover has a factory installed “romex” style strain relief connector. After connecting the wires, route the wire leads through this connector. Refer to the wiring diagram in *Figure 31*.

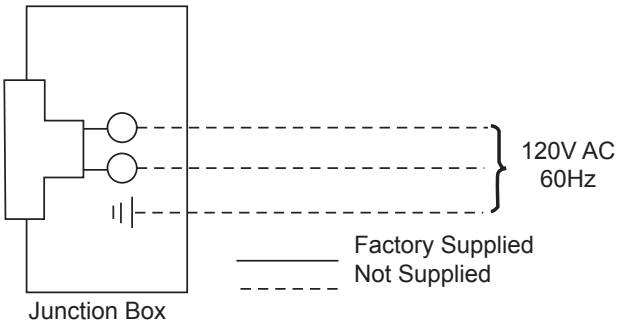

Figure 31 - Junction Box Wiring Diagram

COMMAND CENTER WALL INSTALLATION

The command center may be mounted on the wall with the use of the SCSWEK Kit (15ft. cable, junction box, wall cover).

Mount the junction box provided at the desired location on the wall. Do not extend beyond the 15 ft. wire cable provided. If a longer distance is required, the 15 ft. may be extended up to 30 ft. maximum by using two (2) SCSWEK cables plugged together.

Route the wire from junction box to lower control area at bottom of fireplace. Unplug the 12" cable from the command center. Attach the connector to the pins from wire by pushing in to connector making sure to follow the color code on connector. Plug the 15 ft. extension cable into the 2 ft. cable. Remove command center from the fireplace and plug the other end of the extension cable into the command center. Snap on wall cover provided and screw to junction box.

WALL SWITCH INSTALLATION

The wall switch wire connection is located off the 2 ft. wire harness from the control box to the command center. *Figure 32.* The connection is labeled “Wall Switch”. Unplug the male and female connectors and connect the two (2) low voltage wires provided. Run wire to desired location on wall. Up to 50 ft. of 18 ga. wire may be used if necessary. Attach wires to wall switch. Mount the wall switch in to junction box and screw on cover.

WARNING

Do not connect wall switch to 110 V circuit.

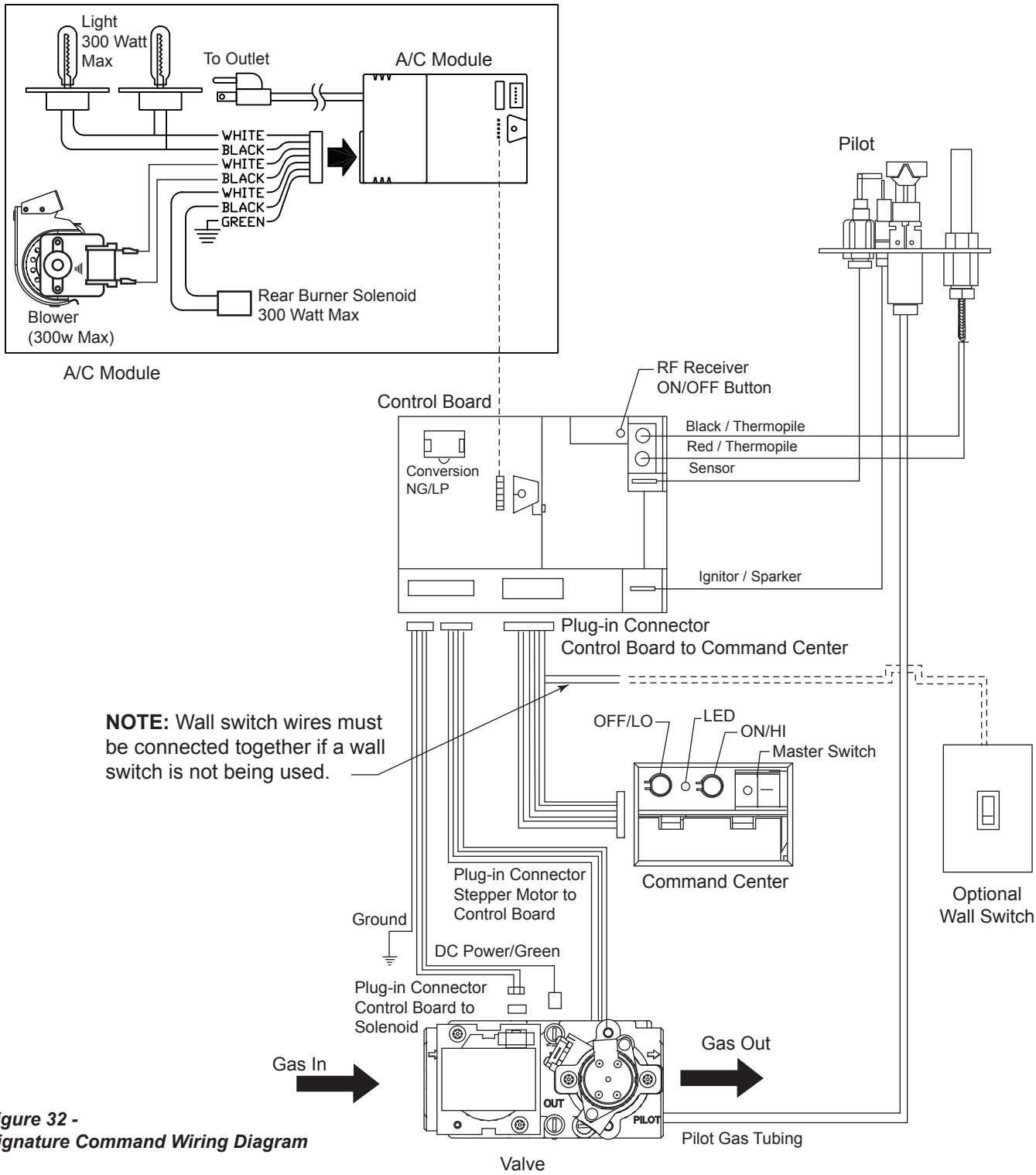

Figure 32 -
Signature Command Wiring Diagram

CAUTION

Electrical connections should only be performed by a qualified, licensed electrician. Main power supply must be turned off before connecting fans to the main electrical power supply or performing service.

WARNING **Electrical Grounding Instructions: This appliance is equipped with a three-prong (grounding) plug for your protection against shock hazard and should be plugged directly into a properly grounded three-prong receptacle.**

WARNING **Electrical connections should only be performed by a qualified licensed electrician. Main power supply must be turned off before connecting the fan to the main electrical power supply or performing service.**

NOTE **The black and white wires on the AC box wiring harness are marked 'Blower', 'Light' and 'Aux'. It is important to use the wires marked 'Blower' or the control will not work correctly.**

SIGNATURE COMMAND BLOWER

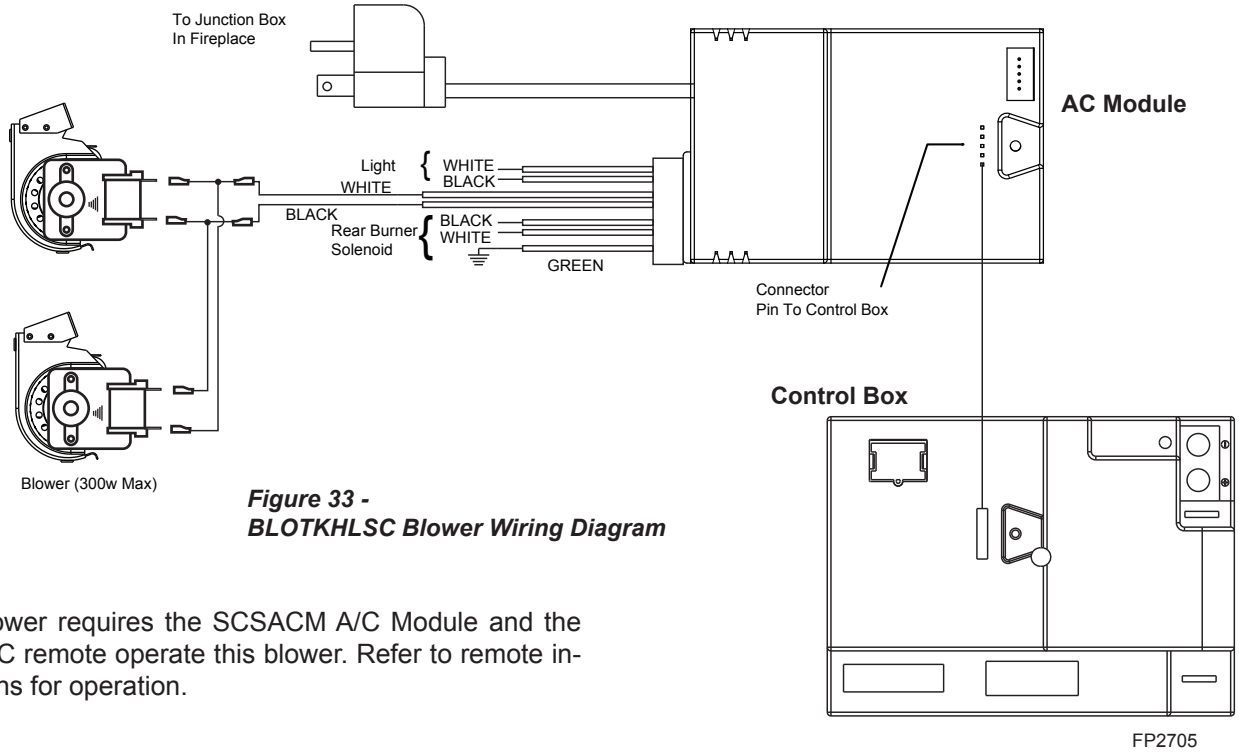

Figure 33 - BLOTKHLSC Blower Wiring Diagram

The Blower requires the SCSACM A/C Module and the TSFRSC remote operate this blower. Refer to remote instructions for operation.

GLASS FRAME REMOVAL

1. Remove the plate located in front of the glass at the bottom.
2. Remove rod provided for screen assembly located beneath the cover plate.
3. Rotate the access doors on the right and left side of the glass toward the glass.
4. Remove glass frame by releasing the three latches located at the top of the firebox. Tilt glass away from the unit, lift glass frame up and away from the unit. *Figure 34*

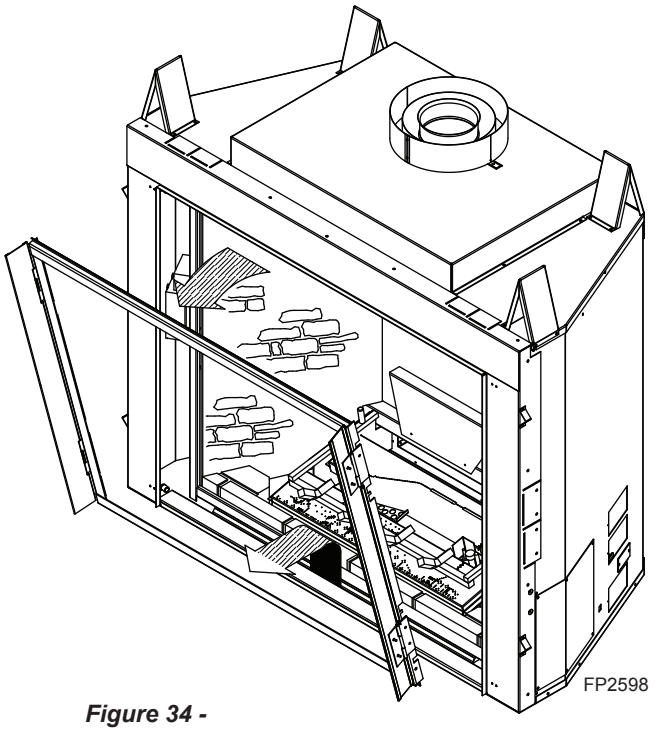

Figure 34 - Remove Glass Frame

CAUTION

Each clamp has a quick spring force. When reinstalling clamps, keep fingers clear.

WARNING

HOT GLASS WILL CAUSE BURNS.

DO NOT TOUCH GLASS UNTIL COOLED.

NEVER ALLOW CHILDREN TO TOUCH GLASS.

STONE, LIGHT BULB, AND LENS PLACEMENT

1. Remove the trapezoidal light shroud located at the back of the firebox by unfastening the three screws.
2. Disassemble the trapezoidal light shroud by unfastening the four screws which secure the front to the back. Set lens with the orange painted surface toward the bottom. Center the lens right to left. Reassemble the front to the back and set the side.
3. Place the right side panel by sliding it at an angle to clear the grate. Set the panel straight up and bring forward until it comes in contact with the reverse bend located at the front of the firebox. Use one of the brackets and screws provided to secure the panel in place.
4. Place the rear lower panel by setting it over the channel behind the light socket. Make sure the grout line lines up with the one on the side.
5. **NOTE: Have the left panel bracket and screw handy before installing the rear upper panel in place.** Place the rear upper panel in place by resting it over the rear lower panel and sliding it behind the right side panel. While holding the rear upper panel in place, slide the left panel at an angle to clear the grate. Set the left side panel straight up and release the rear upper panel. Secure the left side panel in place using the second bracket and screw provided in the kit.
6. Loosen the four (4) screws securing the grate to burner and place the front hearth brick simultaneously and pull toward the front away from the burner. This is critical for balancing air flow around the front burner. Retighten the grate screws.
7. Install the halogen light bulb provided with the unit (inside the log set). Do not touch light bulb directly with fingers.
8. Replace the trapezoidal light shroud removed in step #1 by sliding it over the light bulb and sockets. Be careful not to damage the light bulb. Align the holes on the deflector with the hole on the rear channel and secure in place.

ROCK WOOL PLACEMENT

1. Place rock wool on the front burner to provide glowing embers. For best results, pull the rock wool apart into dime size pieces and place on top of burner. Also place the same size ember over the carry over parts on the rear burner. **Do NOT place embers over open slots on the rear burner.**
2. Distribute one layer of rock wool to cover the burner. *Figures 35 & 36*
3. Place the logs on the burner. Refer to *Log Placement*. Light unit and after 15 minutes, check burner flame and glow. Refer to *Burner Flame, Page 44*.

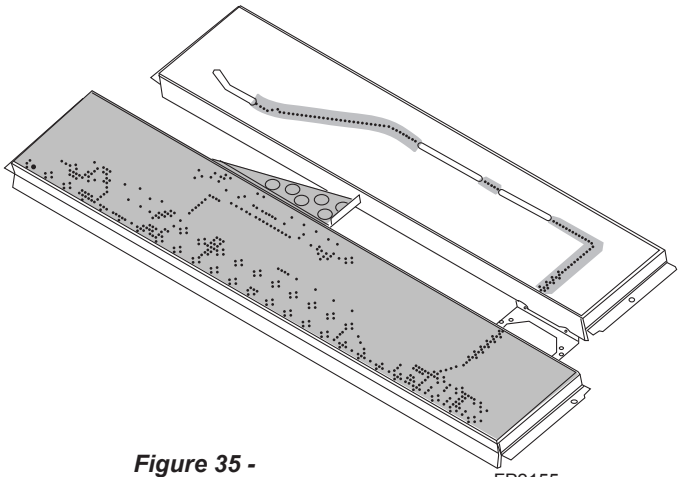

Figure 35 - Rockwool placement

WARNING

Do not use the entire bag of rock wool to cover the burner. This could cause the flame to burn poorly and may lead to sooting.

LOG PLACEMENT

LG753

Figure 36

Burner Grate Assembly

1. Hold Log #1 with the flat side of the log parallel to the right brick. Place the log on the pin on the right rear of the log bracket. Make sure to fit the notch in the front of the log over the fettle. There should be a slight gap (approximately 3/8") between the log and the brick.

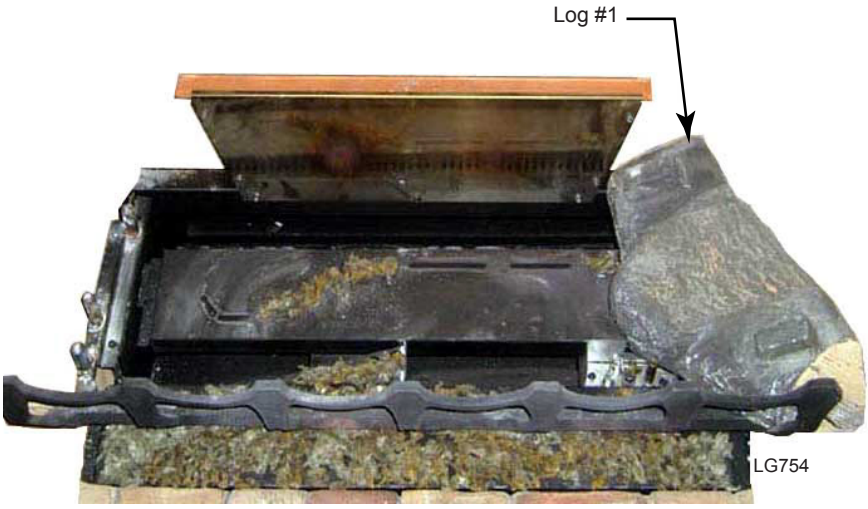

LG754

Figure 37

LG755

Figure 38

2. Hold Log #2 in your left hand with the thick end to the left. Position the log on the left front just behind the fettle and seat the log on the two (2) pins on the left fettle bracket. The right end of the log should rest along the back edge of the front burner.

3. Hold Log #3 in your left hand with the thick end of the log on your left. Orient the log so the log sits on the pin on the rear of the left fettle bracket. The notch under the right end of the log should fall just behind the rear burner.

Figure 39

4. Hold Log #4 with the square base of the log on the bottom. Place the log just in front of the light fixture and resting on top of the keys on Logs #1 and #3. There should be a slight gap underneath the log between the base and Log #3 while resting flush against the right end of Log #3.

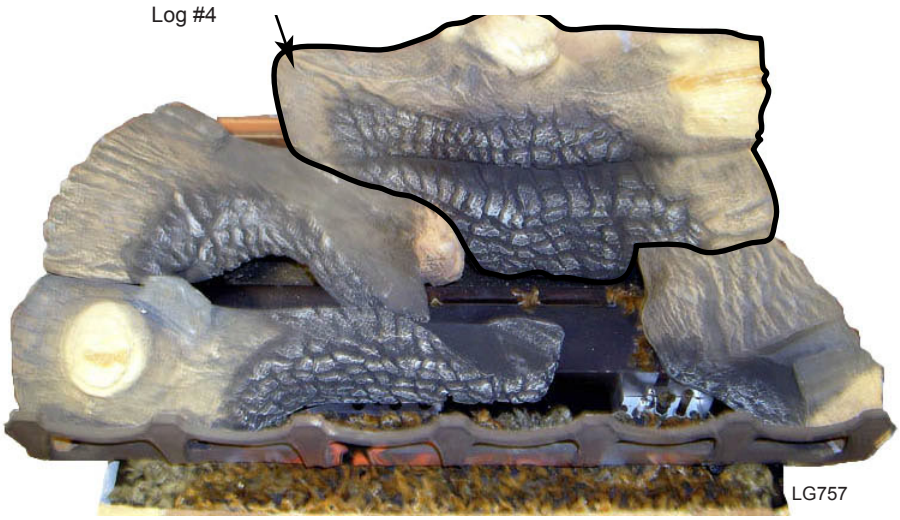

Figure 40

5. Orient Log #5 with indentation in the bottom of the log on the right. Place the log on top of the front key provided on Log #1 angling slightly up and toward the back of the unit. While making sure to rest on the burner just at the inside edge of the fettle.

Figure 41

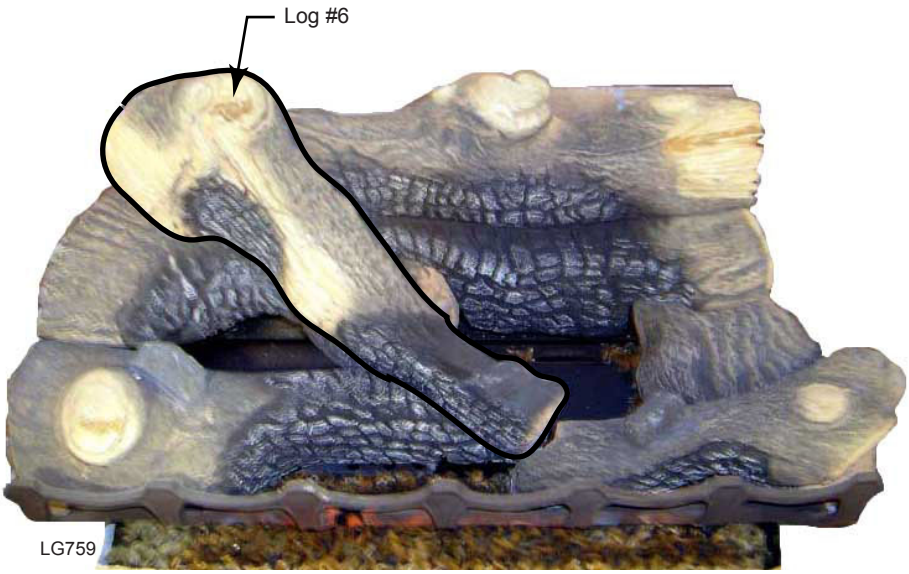

6. Position Log #6 with the "hump" pointing up. Place the log on top of Log #3 and angle the log toward the front of the unit to rest on top of the right end of Log #2 in the notch provided.

Figure 42

7. Hold Log #7 with the long end to the left and the short end to the right and pointing slightly up and toward the back. Place the indentation in the bottom of the log on the key provided on top of Log #5. The back side of the short (right) end of the log should rest against the front of Log #2.

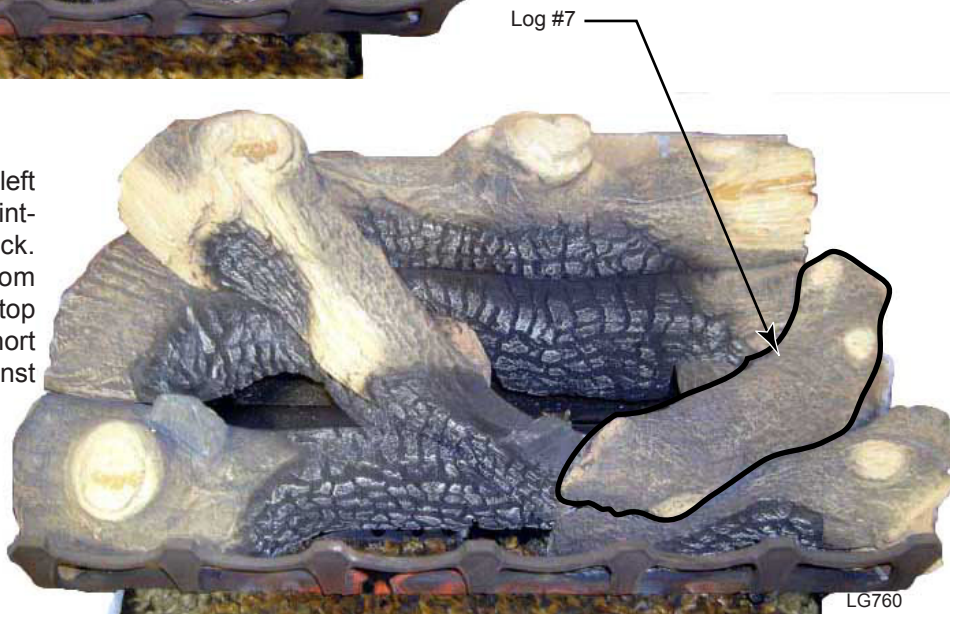

Figure 43

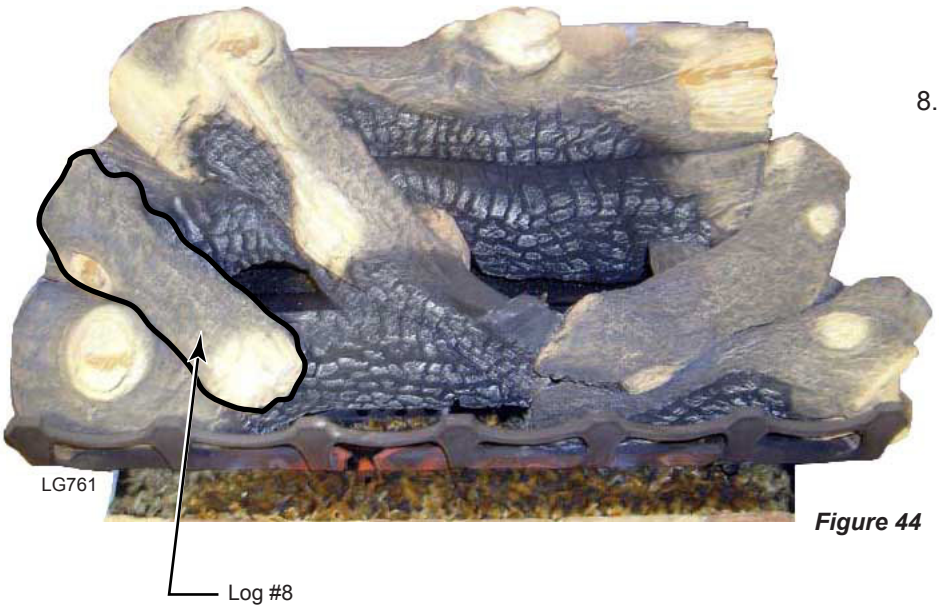

8. Situate Log #8 with the charred end of the log to the right. Place the indentation in the bottom of the log on top of the key on the top of Log #2. Angle the log with the charred end down and toward the front.

Figure 44

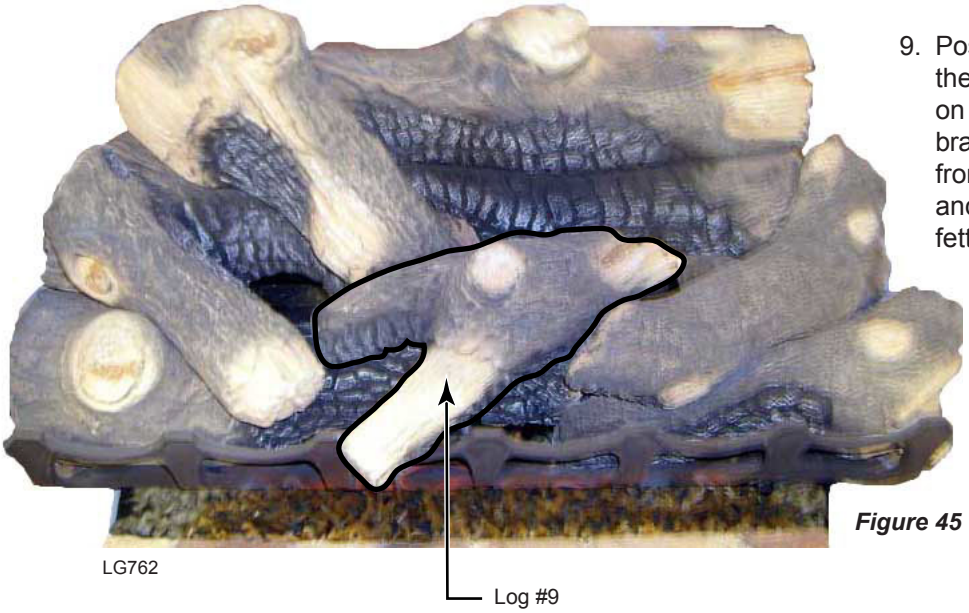

Figure 45

9. Position Log #9 with the "V" in the log to the left. Place the log on top of the key on the right end of Log #6 with the front branch on the "V" protruding beyond the front of the fettle resting just on top of and to the left of the middle tine of the fettle.

ANDIRON INSTALLATION

Slide bracket on back of each andiron over second grate tine from each end and rest legs on stone hearth. *Figure 46*

Figure 46

FOR YOUR SAFETY READ BEFORE LIGHTING

WARNING

If you do not follow these instruction exactly, a fire or explosion may result causing property damage, personal injury or loss of life.

A. This appliance is equipped with an ignition device which automatically lights the pilot. Refer to the instructions.

B. BEFORE OPERATING smell all around the appliance area for gas. Be sure to smell next to the floor because some gas is heavier than air and will settle on the floor.

WHAT TO DO IF YOU SMELL GAS:

- Do not attempt to light any appliance.
- Do not touch any electric switch; do not use any phone in your building.
- Immediately call your gas supplier from a neighbor's phone. Follow the gas supplier's instructions.
- If you cannot reach your gas supplier, call the fire department.

C. Use only your finger to push in the master switch. Never use tools. If the switch will not function by hand, do not try to repair it. Call a qualified service technician. Force or attempted repair may result in a fire or explosion.

D. Do not use this appliance if any part of it has been under water. Immediately call a qualified service technician to inspect the appliance and to replace any part of the control system and any gas control that has been under water.

continued on next page

OPERATING INSTRUCTIONS

1. **STOP!** Read the safety information above.
2. This appliance is equipped with an ignition device which automatically lights the burner. Do not try to light the burner by hand.
3. With five (5) minutes to clear out any gas. Then smell for gas, including near the floor. If you smell gas, **STOP!** Follow "B" in the safety information on Page 35. If you do not smell gas, go to next step.
4. Press the master switch to the "ON" (-) position. Within eight (8) seconds it will beep once. This indicates the system is ready.
5. Press "ON " button. Sparker will spark and pilot flame will light.
6. Once pilot flame is established, the main burner flame will light automatically.
7. If the pilot will not stay lit after several tries, turn the master switch to "OFF" and call your service technician or gas supplier.

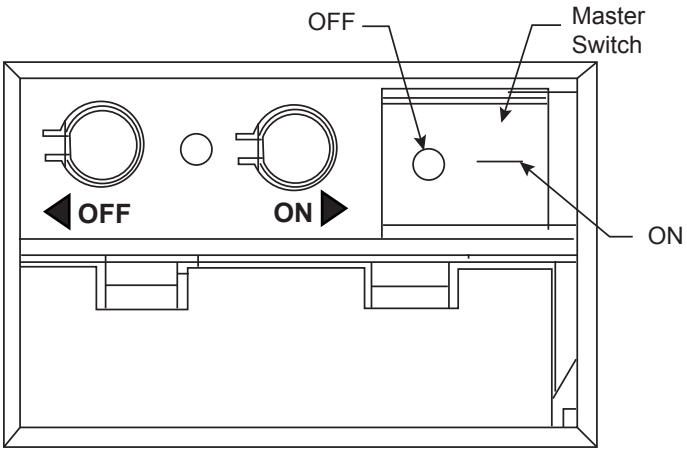

Command Center

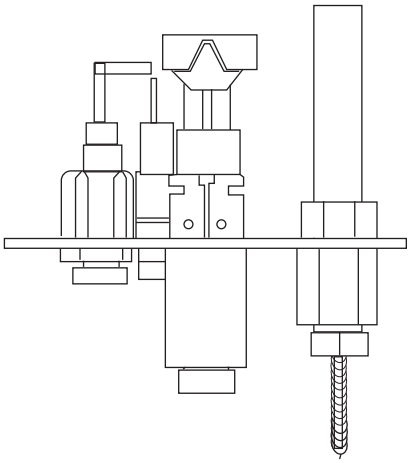

TO TURN OFF GAS TO APPLIANCE

1. Turn master switch to "OFF".
2. Turn off all electrical power to the appliance if service is to be performed.

FEATURES

Command Center

- Easy Access Function Operation and System Configuration
- Operation Confirmation/Fault Diagnostic Indications (LED/Buzzer)
- ON/OFF/HI/Med/Low Operation
- Optional Wall Mounting

Control Board

- Electronic Ignition
- Pilot Lockout safety feature
- Electric Power Regeneration from Thermopile to save battery
- 6-hour Automatic Shut Down Option
- Convenient NG/LP Gas Type Conversion
- Standing Pilot/Intermittent pilot Conversion
- Previous settings Restoration Ability (Memory Off)
- Uninterrupted Operation During Power Outage (Automatic Battery Backup)
- ON/OFF RF Remote Receiver
- Optional Transmitter Learn Capability

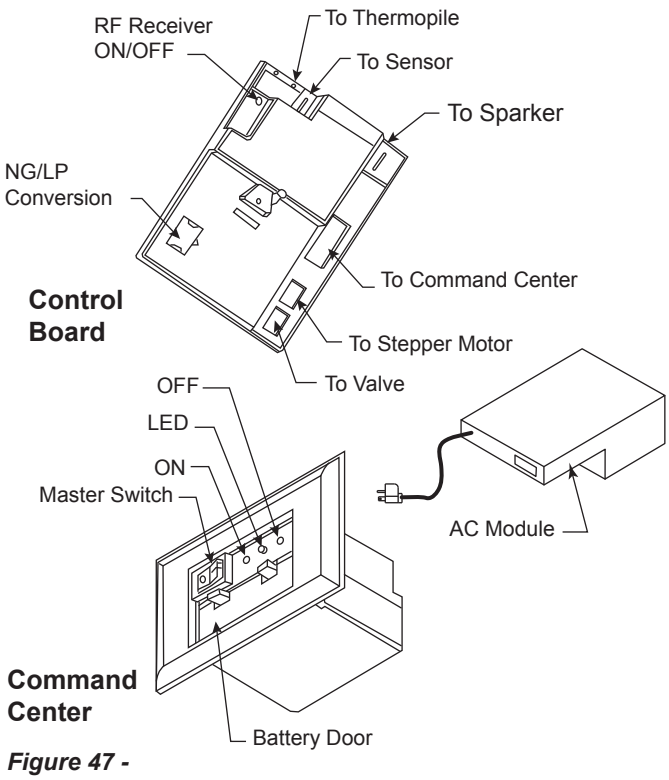

Figure 47 - Signature Command System Components

AC Module Board (Requires TSFRSC Remote)

- Easy Snap-on Design
- Embedded Compact 120 VAC Adapter with Auto Battery Back up Feature
- Remote Controlled 3-step Blower, Lighting, and On/Off Auxiliary AC Outputs

Transmitter (Optional)	TSFRSC
Three Flame Height Settings	X
Low battery Indication for Transmitter	X
Child Proof Lock-out	X
LCD Backlight	X
Security Codes 16	X
Countdown 6 hr Timer	X
Standard Thermostatic Control Mode	X
Smart Mode Thermostat (Auto Flame & Blower Modulation)	X
Three Brightness Settings for Lights	X
Three Speed Control for Blower	X
On/Off Auxiliary Rear Burner Shutdown	X
Programmable Timer to turn blower on and off	X

BATTERY INSTALLATION

The Command Center uses four (4) "AA" batteries as back up for power outages. The system can operate for approximately six (6) months on battery power.

To Install Batteries (not included):

1. Press down the battery door tabs and pull out to remove battery door.
2. Install the batteries as indicated on Command Center.
3. Close battery door by snapping in place.
4. When the four (4) batteries are installed the system will operate without power.
5. The batteries should be replaced when the LED indicates low battery or at least once a year.

SYSTEM CONFIGURATION/SETUP

All System configuration/setup is done on the Command Center.

NOTE: When using On/Off wall switch, the switch must be in the ON position to perform all configuration set ups at the command center.

Intermittent/Standing Pilot Setup (Default intermittent)

1. Holding the ON button on the Command Center while turning on the master switch will toggle between standing pilot and intermittent pilot.
2. After the above operation, one beep (for standing pilot) or two beeps (for intermittent pilot) will be given as confirmation.

Six-hour Safety Shutdown Option (Default ON)

1. The system comes preset from the factory with a six (6) hour shutdown from its last command of operation. This is done to prevent the fireplace from continuing to operate if unattended. You may disable this feature if you wish.

NOTE: By disabling this feature, your fireplace may continue to operate unattended.

2. When the master switch is in the ON position ("-"), pressing the ON button and the OFF button on the Command Center simultaneously will toggle between enabling and disabling the six-hour shutdown option.
3. After the above operation, one beep (for enabling the six-hour shutdown option) or two beeps (for disabling the six-hour shutdown option) will be given as confirmation.

Remote Transmitter Learn Function (Default OFF)

1. The RF receiver button located on the Control Board must be in the on position before the learn function can begin. Use paper clip to depress button. One beep for RF receiver ON or two beeps for RF receiver OFF will be given as confirmation. Refer to *Figure 47* for location.
2. After the RF receiver is on, holding the OFF button on the Command Center while turning on the master switch will activate the learn function for the transmitter.
3. After the above operation, two beeps will be given and the green LED on the Command Center will flash for 10 seconds.
4. During the 10 seconds, press the OFF button on a transmitter to learn. Another two beeps will be given to confirm a successful learning. Refer to transmitter instructions for remote operations.

Shutting Off the Standing Pilot (Temporary Shut Off)

To shut off the standing pilot for service or summer shut down, press and hold the ON button on the Command Center for 3 seconds when the master switch is in the ON position ("-") and the main burner is off.

Note: Pilot will resume the next time system is turned on.

Key Combinations for System Settings

NOTE: When On/Off wall switch is used, it must be in the On position to perform all system setups.

Function	Operation	Default Setting
Intermittent/Standing Pilot Setup	Hold the ON ▲ button while turning on the master switch (Beep once for standing pilot, twice for intermittent pilot)	Intermittent Pilot
Standing Pilot Temp. Shutoff	Hold the ON ▲ button 3 seconds (when the master switch on the main burner is off)	
RF Remote Receiver On/Off	Push the RF receiver On/Off button on the control board Beep once for ON and beep twice for OFF	RF OFF
Learn Remote Transmitter	Hold the OFF ▼ button while turning on the master switch (Beep twice then press any handheld remote button)	
6-hour safety shutdown setup	Press the ON ▲ button and OFF ▼ button simultaneously (Beep once for ON, twice for OFF)	ON

FUNCTIONS/OPERATION (with Command Center)

Turning on the fireplace

1. Turn on the master switch and wait for a beep.
2. Press the ON button on the Command Center or turn on wall switch. Pilot will light and burner will come on High setting or last memory setting (See Turning Off Fireplace below). For memory feature.

Pilot Safety Lockout Function

1. If the pilot doesn't light after sparking for 30 seconds, pilot trial lockout happens. The LED on the Command Center flashes Green once every 2 seconds, until reset.
2. If the pilot flame is lost during normal operation, the system will try three (3) times to relight after three (3) failures, flame loss lockout happens. The LED on the Command Center flashes Red-Green once every 2 seconds, until reset.
3. Turning the master switch on the Command Center to the off position, then ON again will reset the system.

Flame Height Control

1. Press the ON button (on the Command Center) once to turn on the main burner with maximum flame height.
2. Press the OFF button to decrease flame height. The first two presses will decrease the flame height to medium and low.
3. The third press on OFF will turn off the main burner. In standing pilot configuration, the pilot will stay; in intermittent pilot configuration, the pilot will be shut off.

Turning the Fireplace Off

There are three ways to turn the fireplace off.

1. Flip the master switch to the off ("O") position. (This will turn the entire system OFF.)
2. Press the OFF button to Medium, Low, then Off.
3. Hold the OFF button anytime for three seconds or by turning off the wall switch. These two commands of OFF are (Memory Off) the system will remember all last settings before turning off. The next time the fireplace is turned on, all settings will resume. To reset, change to the desired settings and shut off by using the Memory Off commands and the system will be reset to those new settings.

Command Center Operations:

The following functions are available on the Command Center.

Function	Operation
Power Up	Flip the master switch to the ON ("_") position to power up the system
Fireplace ON	Press the ON ▲ button on the Command Center or turn on wall switch to turn the fireplace on
Fireplace OFF	Flip the master switch to the OFF ("o") position OR press the OFF ▼ button 3 times OR for Memory Off, hold the OFF ▼ button 3 seconds, or turn off wall switch
Flame Height Up	Press the ON ▲ button once to turn on the fireplace with maximum flame height
Flame Height Down	Press the OFF ▼ button to lower the flame height to Medium and Low

Self Diagnostics Chart:

The Command Center has a self-diagnostic LED enabling you to troubleshoot problems and potentially avoid a service call. Please refer to the charts below for indicator reference.

Fault	LED Indication
Conversion Cover Missing	One RED (1 time)
Spark Fail	Two RED (1 time)
No Sensor Signal	Three RED (1 time)
Pilot Lockout - trial	One GREEN, every 2 sec. (until manual reset)
Pilot Lockout - flame loss	One RED-GREEN, every 2 sec. (until manual reset)
Low Battery	One RED, every 10s (continuously)
No or Low Thermopile Power	Two RED, every 10s (continuously)
Learning	GREEN Flashes, every 1 sec. (for 10 sec.)
AC Power On	GREEN solid
Pressure Switch Failed (Power Vent only)	One RED every 2 sec. (until manual reset)

NOTE

Due to the sensitive temperature monitoring components in the transmitter, it is necessary to allow the transmitter to stabilize to room temperature before accurate room temperatures are displayed. If the transmitter is activated from a severe cold condition, allow 15 minutes for accurate temperature readings to appear on the LCD display.

WARNING

Turn appliance OFF (at the Master Switch) if you are away from your house for an extended period of time. Never leave anything on top of the surface of the transmitter.

■ Function Areas of the LCD Display

Figure 26 shows the display of the TSFRSC LCD.

Information Bar

The information bar shows the room temperature, the "sending signal" radio icon, the low battery indication icon, the child-proof icon, and the flame icon. This area doesn't have touch buttons.

- The room temperature will always be shown after power-up. It displays the room temperature from 40 °F to 99 °F. "Lo" and "HI" will be displayed when the room temperature is lower than 40°F or higher than 99°F, respectively.
- The radio icon will be shown when the transmitter is sending a signal.
- The low battery indication icon will be shown when the battery voltage is low.
- The child-proof icon will be shown when the child-proof mode is activated.
- The flame icon indicates the current flame height - Off, Low, Medium and High

Touch Area

The touch area contains all touch buttons to control the transmitter. It consists of two categories: menus and adjustment arrows. The blue LED backlight lights up for 8 seconds when any of the touch buttons is pressed.

- The menus include TIMER, THERMO, LIGHT, FAN and AUX (Rear Burner Control).
- The adjustment arrows include ON/up and OFF/down. Their default function is to adjust the flame height. When a button from the menu is pressed, the ON/up and OFF/down buttons will temporarily become adjustment controls for the selected item. When the adjustment is done, the ON/up and OFF/down buttons go back to flame height controller again.

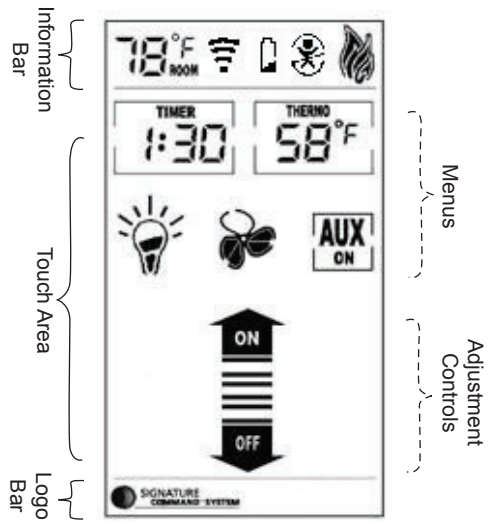

Function Areas of the LCD Display

Figure 48

Logo Bar

The Logo Bar contains the brand logo: Signature Command System.

■ Initialization and Setting up

Installing Batteries:

Figure 49

The remote transmitter has two battery compartments, one on each end of the transmitter. **Always change all four (4) batteries at the same time.**

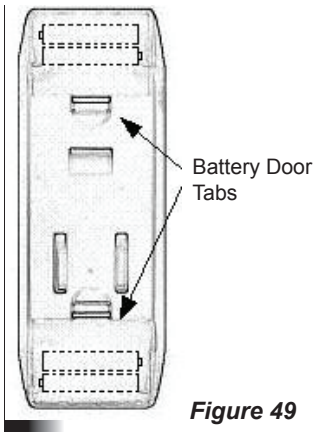

Figure 49

To install batteries,

1. Press down the battery door tab and pull out to remove the battery door.
2. Install the batteries as indicated inside the battery compartments.
3. Close the battery door by snapping in place.
4. When all **four** batteries are installed, the transmitter will initialize for 5 seconds and then is ready for use.
5. The batteries should be replaced every 12 months or when the low battery icon indicator is displayed.

Changing Temperature Unit

When batteries are installed in the transmitter,

1. All available icons on the LCD will be turned on then be cleared.
2. The LCD will display temperature unit: °F. Use ON ∆ to toggle the units between °F and °C within the first 5 seconds.
3. The transmitter enters Manual Mode
4. The LCD displays room temperature with the chosen unit.

Setting Privacy Code on Transmitter:
Figure 50

The remote transmitter privacy code is preset in factory. In the event of activation or interference from other nearby transmissions, change the code using the following procedures (learn function must be performed after changing the code):

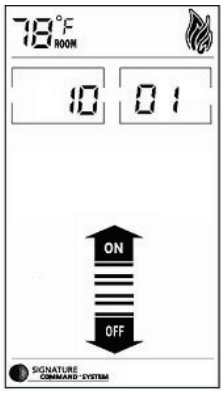

Figure 50

1. Press the ON/arrow button and the TIMER button at the same time to enter privacy code setup mode.
2. The setup display is shown in the figure. The four digits on the top stand for the privacy code (as the actual DIP switches on Ambient's previous remotes). The default values of the four digits will be all "1" (ON).
3. The first digit will be flashing upon entering the setup mode. Push the ON button to toggle its value between "0" (OFF) and "1"(ON), and push the "OFF" button to jump to the next digit. The next digit will then start flashing and the first one stops flashing. Set up the four digits to your choice.
4. After setting up all the four digits, push "OFF" to finish the process and return to the previous mode.
5. The Signature Command control board then needs to re-learn the new setting.

Performing Learn Function

1. The RF receiver button on the control board in the fireplace must be in the on position before the learn function can begin. *Figure 51* With the Command Center master switch in the ON position, use paper clip to depress the recessed button on Control Board, one beep for RF receiver ON or two beeps for RF receiver OFF.
2. Holding the OFF button on the Command Center while turning on the master switch will activate the learn function for the transmitter.
3. After the above operation, two beeps will be given and the green LED on the Command Center will flash for 10 seconds.

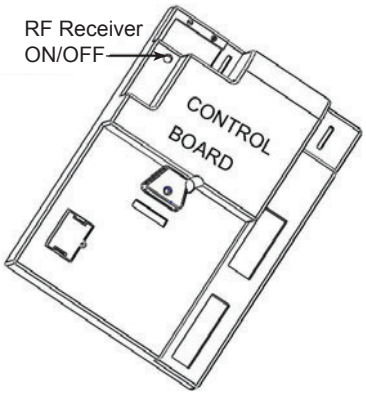

Control Board
Figure 51

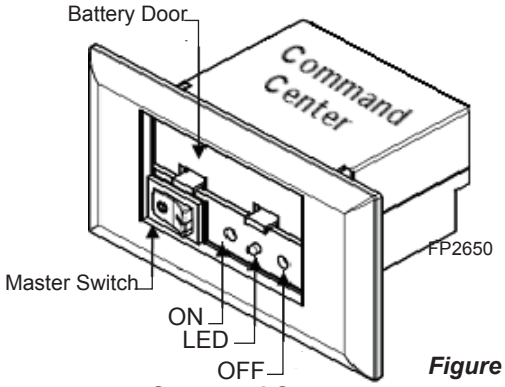

Command Center
Figure 52

4. During the 10 seconds, press the OFF button on the transmitter to learn. Another two beeps will be given to confirm a successful learning. *Figure 30*

WARNING **Do not use two (2) or more remote control systems in the same area with the same privacy code setting, as they will communicate with each other. This may cause the appliances to malfunction.**

Resetting the transmitter:

If the transmitter is not working properly, reinstall the batteries to reset the transmitter.

1. Pull out at least one of the batteries.
2. Press any key on the screen to discharge.
3. Wait for 10 seconds and reinstall the batteries.

Pushing and holding any key for more than 10 seconds until the display refreshes will also reset the transmitter.

■ Functions and Operations

General:

The TSFRSC Remote Control has four (4) operating modes: Manual, Timer, Thermostatic and Smart Mode. The control system can be set to temperature range between 45° F and 90° F. The blower speed and flame height can be adjusted in the manual, timer and thermostatic mode. The Smart Mode will automatically adjust flame height and blower speed according to the difference between Set and Room temperatures.

The transmitter will operate the remote receiver from 1 foot to a maximum of 30 feet. The distance is reduced when batteries are low.

Manual Mode
Figure 53

In this mode, the TIMER button and the THERMO button will only display "TIMER" and "THERMO", respectively without showing the time and the SET temperature. Pressing the ON/up and OFF/down buttons will change the flame height if none of the menu buttons (TIMER, THERMO, LIGHT, FAN, AUX) are pressed and flashing.

1. Press the ON/up button to turn on the fireplace. The flame icon on the LCD displays High.
2. Press the OFF/down button to decrease the flame height and turn off the fireplace. When the OFF/down button is pressed for three times, the flame icon changes form High to Medium, to Low, then to Off.
3. If the OFF button is held for more than 3 seconds at any flame height, the fireplace will be turned off and the flame icon disappears.
4. Sliding up and down on the arrow buttons can also turn on or turn off the fireplace.
5. If the fireplace is shut off using the above methods in 3 and 4, all the settings will be remembered and will be resumed next time the fireplace is turned on (Memory Off).

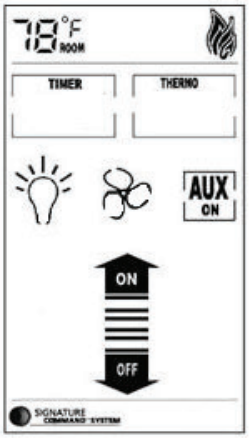

Figure 53

Timer Mode
Figure 54

Press the TIMER button to enter timer mode. The fireplace will stay on for a period of time as specified by the timer and then be shut off by the transmitter when the timer counts down to zero.

1. When the TIMER button is pressed, the Set Time appears in the frame of the button and flashes.
2. Use ON/up and OFF/down to increase or decrease the Set Time in 15 min. increments, between 0:00 to 6:00. Sliding up and down on the arrow buttons will increase or decrease the Set Time in 1 hour increments.
3. Push the TIMER button again to confirm the Set Time, the transmitter sends an ON signal to turn on the fireplace.
4. The flashing stops and the ON/up and OFF/down buttons become flame height controller again. The flame height will then stay as set up by the ON/up and OFF/down buttons.
5. The TIMER button can be used when the transmitter is in Manual Mode or in Thermostat Mode. In both modes, the fireplace will be shut down completely when the timer counts down to zero.
6. To exit Timer Mode,
   a. Push and hold the TIMER button for 3 seconds Or
   b. Use the OFF/down buttons to decrease the Set Time to zero Or
   c. Slide down on the arrow buttons to exit TIMER mode and shut off the fireplace.

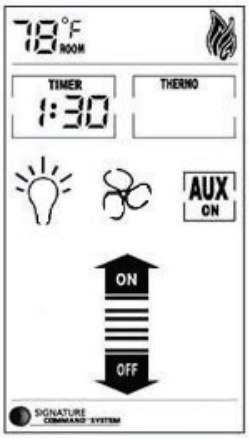

Figure 54

Thermostat Mode
Figure 55

NOTE: The Command Center buttons will disable when thermostat is being used.

Press the THERMO button to set the transmitter in thermostat mode. The transmitter will automatically turn on the fireplace when the room temperature is below the set temperature and turn off the appliance when the room temperature is above the set temperature within one degree.

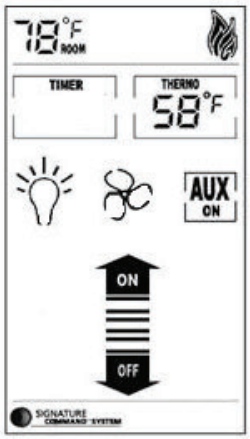

Figure 55

1. When the THERMO button is pressed, the Set temperature appears in the frame of the button and flashes.
2. Use ON/up and OFF/down to increase or decrease the Set temperature in 1 degree increments, between 45 degrees and 90 degrees. Slide up and down on the arrow buttons will increase or decrease the Set Temperature in 10 degrees increments.
3. Press the THERMO button again to confirm the Set Temperature. The transmitter will send out an On signal or an Off signal depending on the relationship between the Set temperature and the Room temperature.
4. The flashing stops and the ON/up and OFF/down buttons become flame height controller again. The flame height will then stay as set up by the ON/up and OFF/down buttons.
5. To exit Thermostat Mode:
   a. push and hold the THERMO buttons for 3 seconds or
   b. slide down on the arrow buttons to exit Thermostat mode and shut off the fireplace.

Smart Mode Option for Thermostat Mode
Figure 56

Press and hold the THERMO button and the ON/UP button at the same time for 3 seconds to toggle between Smart Mode and the regular Thermostat Mode. The icon “Smart Mode” will appear under the Set Temperature. The transmitter will automatically adjust the flame height according to the difference between the Set temperature and

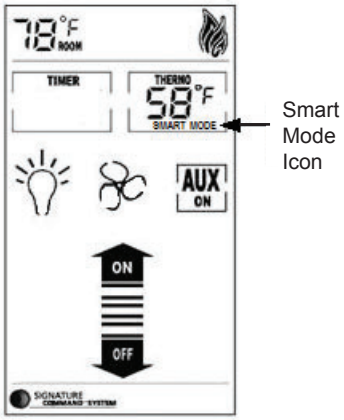

Figure 56

the Room temperature. There is no manual flame height adjustment. The fan speed will also automatically adjust if turned on.

NOTE: When entering the Smart Mode function there will be a 10 second delay for the flame and blower adjustment. When Smart Mode operates automatically there can be up to a 3 minute delay for flame/blower adjustment. Smart Mode checks temperatures every 3 minutes. Also see AUX Control.

1. When Set Temp. is 3° F or higher than Room Temp., flame height will be on High.
2. When Set Temp. is 2° F higher than Room Temp., flame height will be on Medium.
3. When Set Temp. is 1° F higher than Room Temp., flame height will be on Low.
4. When Set Temp. is equal to Room Temp., flame height does not change (stays on low).
5. When Set Temp. is lower than Room Temp., the fireplace will be shut off.
6. When Set Temp. is 1° F higher than Room Temp., again the flame height will be on Low.
7. the fan speed follows the flame height, if the fan is turned on.

To exit Smart Mode and shut off the fireplace;

a. push and hold the THERMO buttons for 3 seconds, Or
b. press the OFF button, Or
c. slide down on the arrow buttons.

To shut off the Smart Mode option and return to regular thermostat mode, press and hold the THERMO button and the ON/UP button at the same time for 3 seconds again.

Blower Speed Control
Figure 57

NOTE: Blower will only work with flame on.

The blower speed control function is used to adjust the speed of the blower connected to the Signature Command System. There are four speed levels, Off, Low, Medium, High.

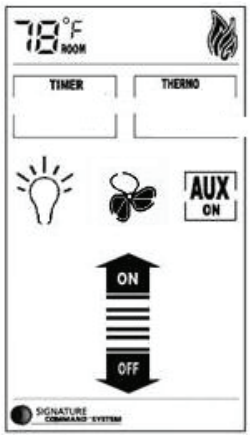

Figure 57

1. Press the FAN button to enter the blower speed control mode. The fan icon will start flashing.
2. Press the ON/up and OFF/down button to increase/decrease the blower speed.
3. Press the fan button again to confirm the speed setting. If the fireplace is on, the blower speed will take effect right away; if the fireplace is off, the receiver will remember this setting and the blower is still off (see blower On Delay and Off Delay in the next section).
4. After the signal is sent, the ON/up and OFF/down buttons become flame height controller again.
5. When the fan button is flashing, slide up and down on the arrow buttons will turn the blower speed to High or Off directly without pressing the fan button again to confirm.
6. If the blower is turned on using the FAN button, the blower speed will adjust automatically when using Smart Mode (See Smart Mode section).

Blower On Delay Time and Off Delay Time Setup
Figure 58

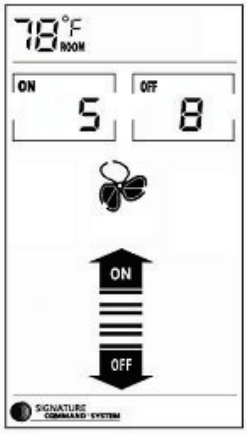

Figure 58

1. Hold the FAN button for 3 seconds until two numbers appear on the LCD screen. The left number is blower On Delay and the right number is blower Off Delay Time.
2. When the first number is flashing, use the ON/up button to set the desired On Delay Time from 0 to 15 min.
3. Press the OFF/down button to jump to the Off Delay Time setup.
4. When the second number is flashing, use the ON/up button again to set the desired Off Delay Time from 0 to 15 min.
5. Press the OFF/down button again to finish the setup and the new settings will be transmitted to the receiver.
6. The default settings are 5 minutes for the On Delay Time and 8 minutes for the Off Delay Time, as shown.

Light Brightness Control
Figure 59

The light brightness control function is used to adjust the brightness of the light bulbs connected to the AC module on the Signature Command System. There are four light brightness levels defined: Off, Low, Medium, High

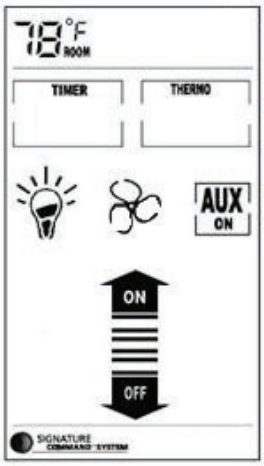

Figure 59

1. Press the LIGHT button to enter the light brightness control mode. The LIGHT icon will start flashing.
2. Press the On/up and OFF/down buttons to increase/decrease the light brightness (Off-Low-Medium-High).
3. Press the light button again to confirm the setting. The new setting will be transmitted to the receiver.

4. After the signal is sent, the On/up and Off/down buttons become flame height controller again.
5. When the light button is flashing, slide up and down on the arrow buttons will turn the light brightness to HIGH or Off directly without pressing the light button again to confirm

AUX Control (Rear Burner On/Off Control)

The AUX control function is used to turn on or turn off the rear burner connected to the AC module of the Signature Command System. Press the AUX button to turn on or turn off the rear burner.

1. When the rear burner is turned on, the icon will become solid text and the “ON” icon will appear below the “AUX” icon.
2. When the rear burner is turned off, the icon will become hollow text and the “ON” icon will disappear.

NOTE: If Smart Mode is entered when rear burner is off, the rear burner will be turned on automatically; when the transmitter is in Smart Mode, AUX button will be disabled. See Smart Mode section for more information.

Setting up Blank Screen or Constant Display in Idle

Figure 60

There is an option to set up how the LCD displays and functions when the transmitter is in idle. There are two choices:

Figure 60

1. A) Mode. When the transmitter is in idle, the icons in the “touch area” (timer, thermostat, blower, light and AUX) will disappear, as shown in the figure on the left. When any of the touch buttons is pressed, those icons will appear and are ready to operate (default).
2. B) Mode. The transmitter always displays all available icons showing current status of timer, thermostat, blower, light and AUX as shown in the figure on the right.

Press TIMER and THERMO buttons at the same time for 3 seconds to toggle between A) and B).

1. When the current setting is A), touch any place in the touch area to bring up the icons then press TIMER button and THERMO button at the same time for 3 seconds. The backlight will flash once to indicate that the setting has changed to B).
2. When the current setting is B), pressing TIMER button and THERMO button at the same time for 3 seconds will switch to A) Mode. The touch area icons will disappear.

■ Safety Features

1. Low Battery Detection

   When low battery condition occurs, the transmitter will turn off the fireplace.

   A) Battery voltage is checked every one minute. When the battery voltage is low, the LCD displays a low battery icon which will exist in all modes.

   B) The transmitter will not operate with low battery voltage. Change the batteries before the batteries become too weak for normal operations.
2. Power On Initialization

   After the power-on initialization, the transmitter sends a signal to turn off the fireplace.
3. Thermal Shutdown

   When the ambient temperature is more than 99°F, the transmitter will turn off the fireplace.

   A) The LCD will display “HI”.

   B) The Transmitter will not function until the room temperature has dropped below 99 degree Fahrenheit.

4. Low Temperature Condition

   When the ambient temperature is less than 40 degrees Fahrenheit, the LCD will display “LO”, and NO SIGNAL will be sent to turn on the appliance.

   All functions still remain the same for both Manual Mode and Thermostat Mode
5. Child-proof Protection

   The child-proof icon will be shown when the child-proof mode is activated by pressing the ON button and the OFF button at the same time for three seconds.

   A) Enter childproof mode by pressing and holding both the ON button and the OFF button simultaneously for 3 seconds. The Childproof indicator will be shown on the LCD.

   B) Deactivate childproof mode by pressing and holding the ON button and the OFF button simultaneously for 3 seconds again. The Childproof indicator disappears on the LCD.

   C) The transmitter cannot be operated in childproof mode.

■ Using the Mounting Base

The transmitter comes with a mounting base which allows you to hang the transmitter on the wall.

1. Secure the mounting base on the wall with supplied screws. For best viewing angle, make it the same height as your eyes.
2. Hang the transmitter on the hook of the mounting base, then push down so the transmitter is flush to the mounting base.

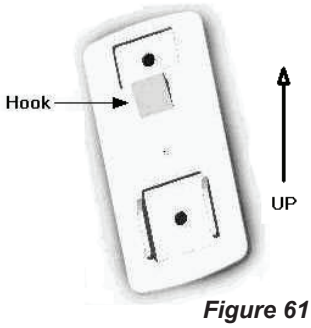

Figure 61

TROUBLESHOOTING

Symptom	Causes	Action
1. Battery icon on LCD on transmitter 2. LCD display is blank 3. LCD display shows “funny” display	1. Low Battery	1. Replace batteries. Change batteries every 6 months. 2. Check battery installation or replace batteries. 3. Reset the transmitter (see “Resetting the Transmitter” section).
4. Appliance does not come on	2. The transmitter did not match with the receiver	1. Make sure the transmitter has learned to the receiver.
	3. Transmitter measures temperature exceeding 99 degrees Fahrenheit and shows “HI” on LCD	1. Move transmitter to a cooler place and wait until temperature drops below 99 degrees.
	4. Distance between the transmitter and receiver is more than 30 feet	1. Make sure the opening distance is less than 30 feet.
5. Blower is not on after the fireplace is turned on	5. Blower setting is off	1. Press FAN key to select Fan speed you desire.
	6. Blower delay setting is set too high	1. Press and hold FAN key to set desired ON/OFF delays. This is done in minutes.

WARNING **Turn off gas before servicing fireplace. It is recommended that a qualified service technician perform these check-ups at the beginning of each heating season**

BURNER, PILOT AND CONTROL COMPARTMENT

Keep the control compartment, logs, and burner areas surrounding the logs clean by vacuuming or brushing at least twice a year. Make sure the burner porting, pilot air opening and burner air opening are free of obstructions at all times.

PILOT FLAME

The flames from the pilot should be visually checked as soon as the heater is installed and periodically during normal operation. **The pilot flame must always be present when the fireplace is in operation.** *Figure 62*. The pilot flame has four distinct flames, one engulfing the thermopile, one engulfing the sensor, and the other two reaching to the main burners.

BURNER

Inspect area around the injector. Remove any lint or foreign material with a brush or vacuum.

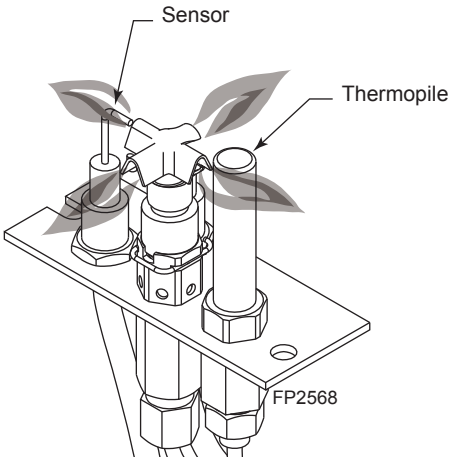

Figure 62 - Pilot Flame

BURNER FLAME

The flames from the burner should be visually checked as soon as the heater is installed and periodically during normal operation. In normal operation, at full rate, and after operating for about 15 to 30 minutes, the flame should be yellow and slightly taller than the rear log. *Figure 63*

If the flame is blue and only in the center, turn off unit and let cool. After unit is cool, remove logs and check to make sure the back holes in the burner are not covered with rock wool. If the back holes are clear, add more rock wool to the center of the burner. Replace logs.

NOTE: The type of installation, vent system configuration, and wind effects may cause the flame patterns to vary.

LG763

Figure 63 - Burner Flame Appearance

VENT SYSTEM

The fireplace and venting system should be inspected before initial use and at least annually by a qualified field service person. Inspect the external vent cap on a regular basis to make sure that no debris is interfering with the airflow. Inspect entire venting system to ensure proper function.

GLASS DOOR

Thoroughly clean the inside of the glass door after using the fireplace for ten hours. Periodically clean the glass door as necessary.

When cleaning the glass, remember:

- **Do not remove the glass when hot.** Allow glass to cool before removal.
- NEVER use abrasive materials.
- Keep children and pets a safe distance away.
- Never operate the fireplace without the glass door properly secured.
- Never operate the fireplace if the glass is broken.
- Replace any glass that is chipped, cracked, or broken. Replacement glass door assemblies MUST be supplied by the fireplace manufacturer – **No substitute materials may be used.**
- Handle glass door with care to avoid striking or scratching it on hard objects.

To clean glass door, follow “Glass Removal” procedure outlined in the *Final Installation* section. Film deposit on the inside of the glass should be cleaned off using a nontoxic, non-corrosive, non-abrasive, mild-cleaning solution. Simply apply an adequate amount to the glass and wipe off with a damp cloth. After all maintenance has been completed, re-install glass door.

LOGS

Leave logs installed in the fireplace for cleaning. Vacuum surface of the logs with a brush attachment. If logs must be removed for cleaning, handle carefully by holding gently at each end. Gloves are recommended to prevent skin irritation from ceramic fibers. If skin becomes irritated, wash gently with soap and water. Vacuum surface of logs with brush attachment or brush logs with a soft bristle brush (i.e. clean, dry paintbrush). To place logs back in the fireplace, see “Log Placement” found in the *Final Installation* section.

NOTE: **Do not use fluids to clean ceramic fiber logs.**

ROCK WOOL

Replace or add rock wool as required following installation instructions in the *Final Installation* section of this manual.

SIGNATURE COMMAND SYSTEM

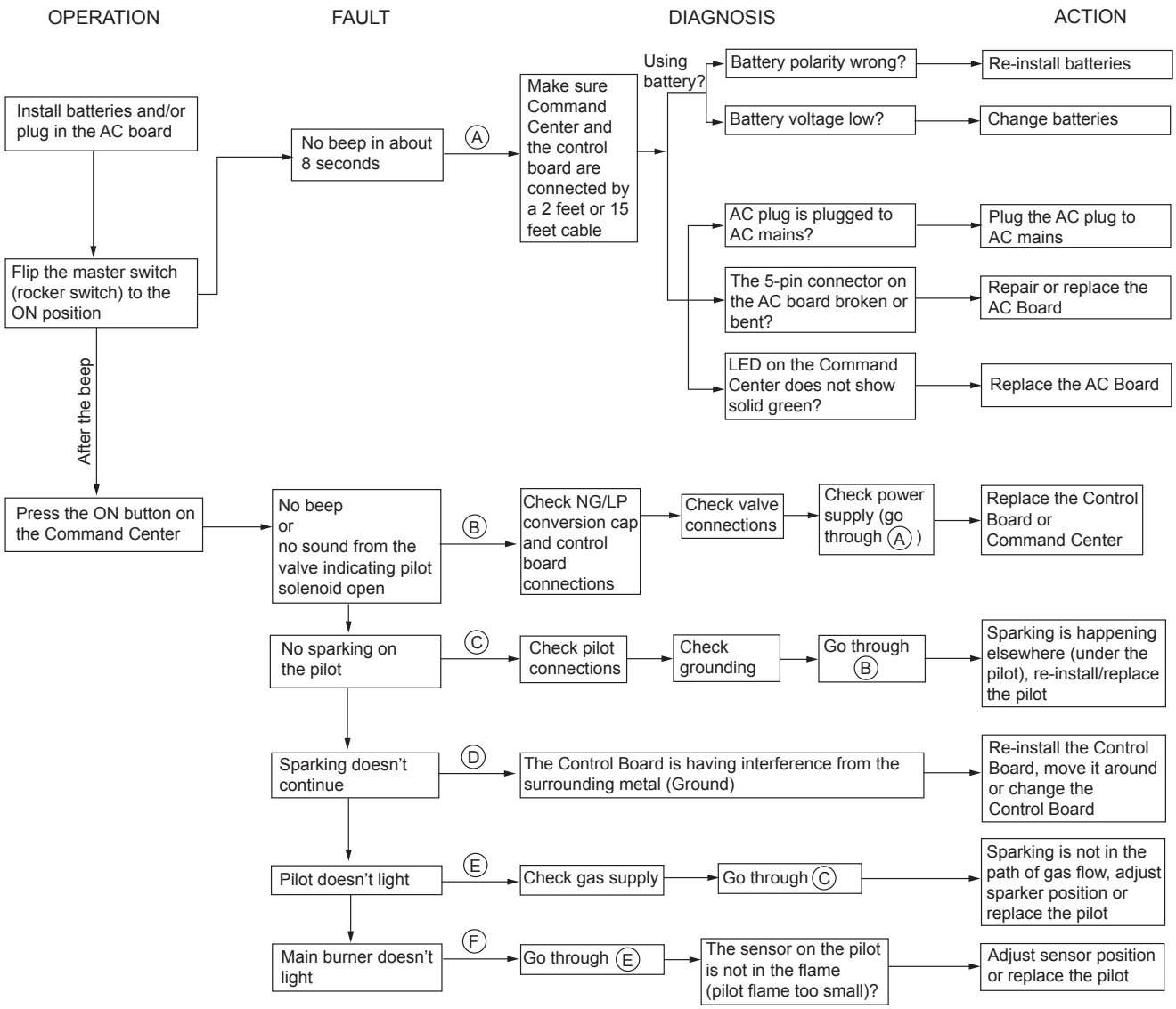

FIREBOX COMPONENTS AND ACCESSORIES

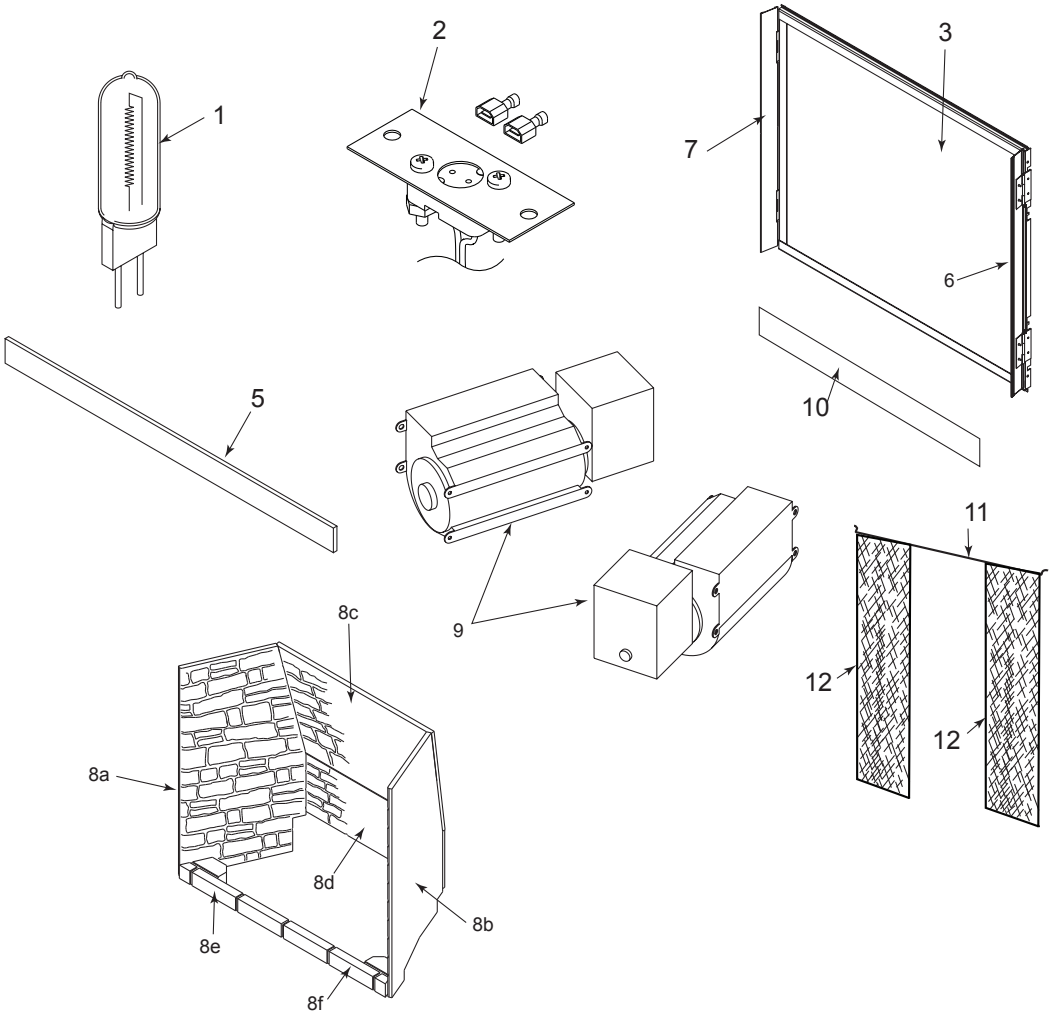

Ref.	Description	Qty.	VHLDV500
1.	Bulb (100 Watt)	2	73D0020
2.	Bulb Socket	2	73D4521K
3.	Glass Frame Assembly	1	73D0159K
4.	Junction Box Assembly (not shown)	1	26D2128K
5.	Light Lens	1	73D0022
6.	Right Access Panel (used with blower)	1	73D4511K
7.	Left Access Panel (used with blower)	1	73D4512K
8.	Stone Fire Brick Set	1	20300318K
8a.	Stone Wall, Left	1	20300319
8b.	Stone Wall, Right	1	20300320
8c.	Stone Rear, Top	1	20300321
8d.	Stone Rear, Bottom	1	20300322
8e.	Stone Floor Front, Left	1	20300323
8f.	Stone Floor Front, Right	1	20300324
9.	Blower Kit (Signature Command System)	1	BLOTKHLSC
10.	Front Cover	1	73D4524
11.	Screen Rod	1	73D0010
12.	Screen	2	73D0017

SIGNATURE COMMAND SYSTEM

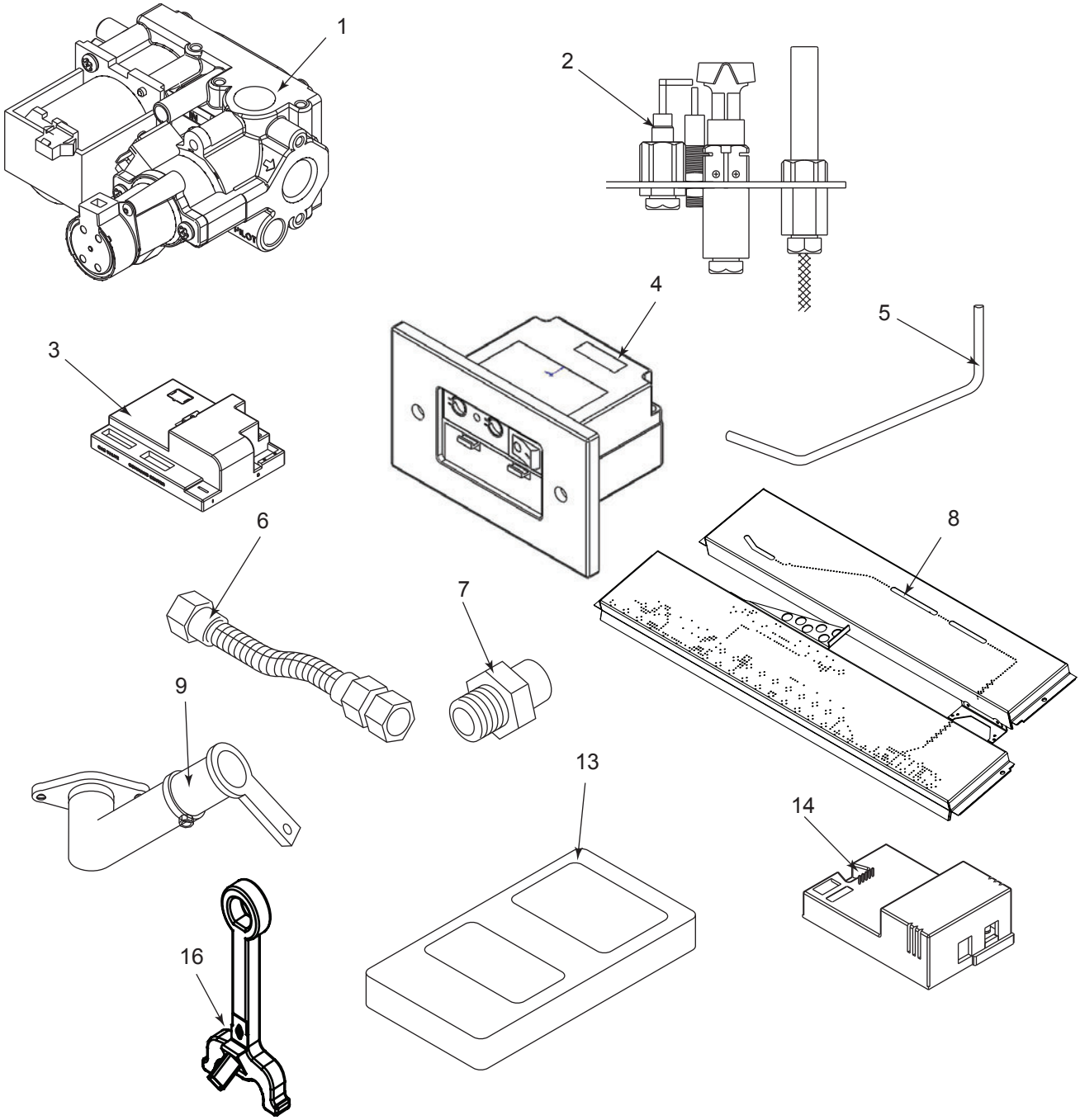

SIGNATURE COMMAND SYSTEM

Item	Description	Qty.	VHLDV500NTSC	VHLDV500PTSC
1.	Gas Valve Assembly	1	80D0001	80D0002
2.	Pilot Assembly	1	80D0039	80D0040
3.	Control Box	1	80D0037	80D0038
4.	Command Center	1	80D0005	80D0005
5.	Tube, Rear, Venturi	1	54D0564	54D0564
5.	Tube, Front, Venturi	1	43D0185	43D1085
5.	Rear Tube, Tee to Solenoid	1	73D3529K	73D3529K
5.	Rear Tube, Solenoid to Venturi	1	73D3528K	73D3528K
5.	Tube, Front, Through-wall	1	73D0146	73D0146
6.	Flexhose w/Shutoff Valve	1	69D0030	69D0030
7.	Rear Injector	1	57D0679	57D0680
7.	Front Injector	1	56D3059	62D3005
8.	Rear Burner Assembly	1	73D3268	73D3268
8.	Front Burner Assembly	1	73D3267	73D3267
9.	Venturi	1	45D0600	45D0600
10.	Wire Valve/Control (not shown)	1	80D0010	80D0010
11.	Wire AC Module (not shown)	1	80D0009	80D0009
12	Wire Command Ctr. (not shown)	1	80D0008	80D0008
13.	Remote Transmitter (full function)	1	TSFRSC	TSFRSC
14.	AC Module	1	SCSACM	SCSACM
15.	Solenoid (not shown)	1	73D3007	73D3007
16.	Cast Iron 12 1/2"	1	20300317K	20300317K
	Accessories			
17.	Decorative Black Door	1	KHL500ADBT	KHL500ADBT
18.	SCS Wall Extension Kit (15' Wire, Rough-in Box, Wall Cover)	1	SCSWEK	SCSWEK

Fuel Conversion Kits - Signature Command System

Natural Gas to LP

VHLDV500NTSC Kit #KHL500CKPS

LP to Natural Gas

VHLDV500PTSC Kit #KHL500CKNS

LOGS

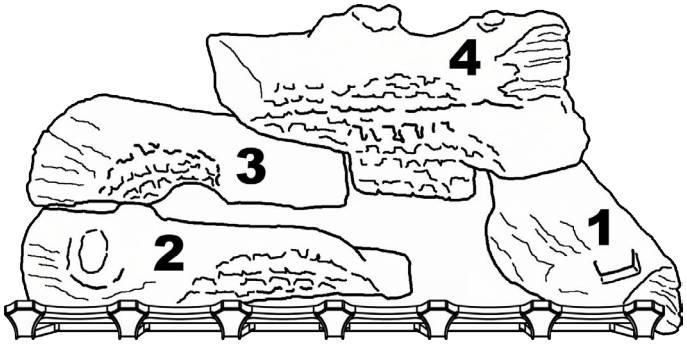

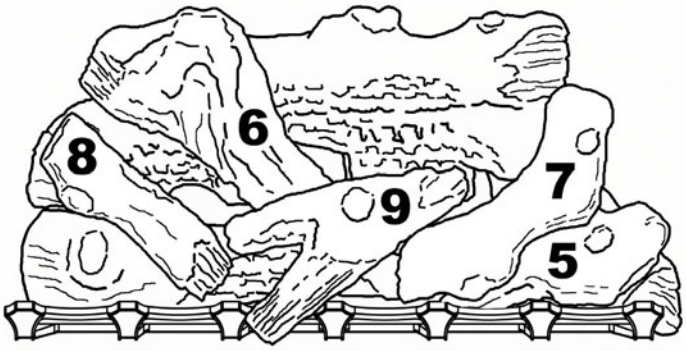

Item	Description	Qty.	VHLDV500
1.	Log #1	1	20300295
2.	Log #2	1	20300296
3.	Log #3	1	20300297
4.	Log #4	1	20300298
5.	Log #5	1	20300299
6.	Log #6	1	20300300
7.	Log #7	1	20300301
8.	Log #8	1	20300302
9.	Log #9	1	20300303

VENT COMPONENTS

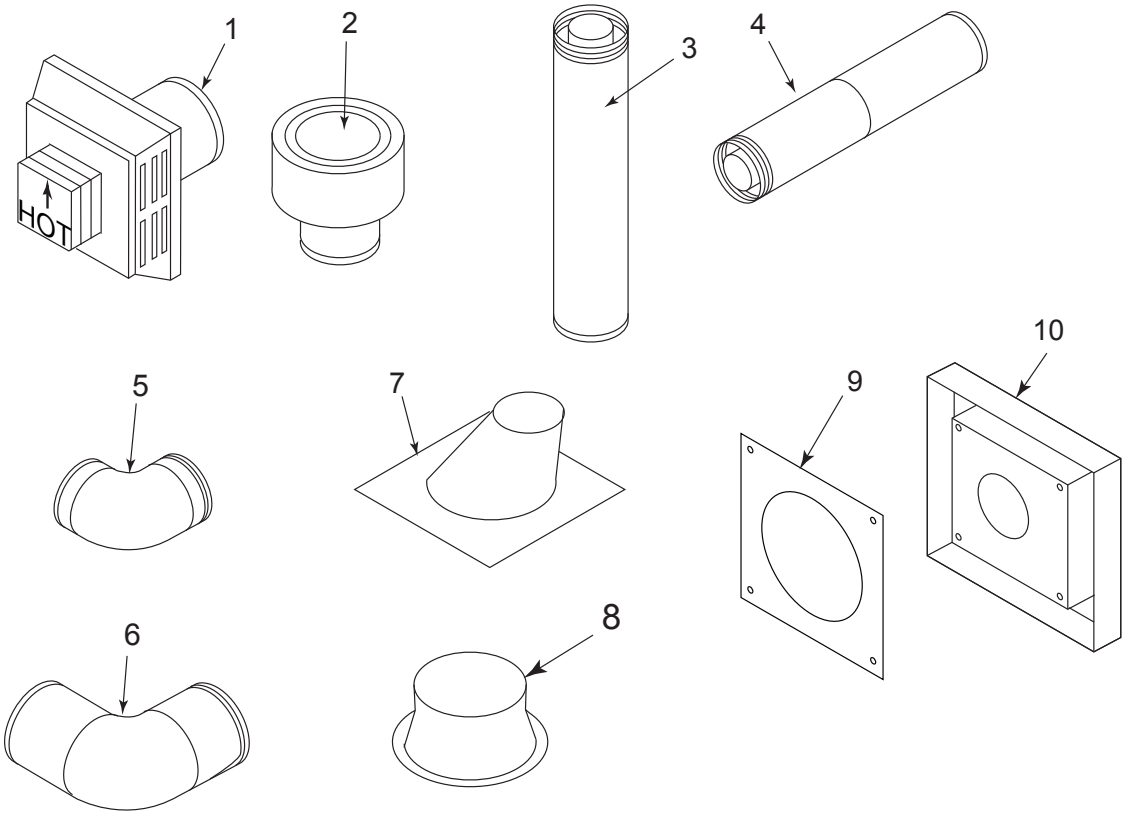

VENT COMPONENTS FOR 5"x 8"

Item	Qty./ Box	Description	Current Simpson Duravent or MHSC Part no.	Old Simpson Duravent or MHSC Part no.	Selkirk Part no.
1	1	Horizontal High Wind Termination Cap	58DVA-HC	1285	5DT-HC
1	1	Horizontal Termination Cap w/Built-In Vinyl Siding Standoff, Heat Deflector, Firestop and Adjustable Pipe 7" to 11"		BHR8TK	
1	1	Horizontal Termination Cap Built-In Vinyl Siding Standoff, Heat Deflector, Firestop, 90° Elbow and Adjustable Pipe 11" to 14" 24" Section of Pipe		KHLBHS8TK	
2	1	Vertical Termination	*see below	*see below	5DT-VC
2	1	Extended Vertical Termination	58DVA-VCE	1283	--
2	1	High Wind Vertical Termination	58DVA-VCH	1291	--
3	4	6" Pipe Length	58DVA-06	1208	5DT-06
3	4	9" Pipe Length	58DVA-09	1207	5DT-09
3	4	12" Pipe Length	58DVA-12	1206	5DT-12
3	4	24" Pipe Length	58DVA-24	1204	5DT-24
3	4	36" Pipe Length	58DVA-36	1203	5DT-36
3	4	48" Pipe Length	58DVA-48	1202	5DT-48
4	4	8 1/2" Pipe Extension	58DVA-08A	--	5DT-AJ
4	4	16" Pipe Extension	58DVA-16A	--	--
5	4	45° Elbow	58DVA-E45	1245	5DT-EL45
5	4	45° Swivel Elbow	--	--	5DT-EL45
6	4	90° Elbow	58DVA-E90	1290	5DT-EL90S
6	4	90° Swivel Elbow	--	1290G	5DT-EL90S
7	6	Flashing, 0/12 to 6/12 Roof Pitch	58DVA-F6	1243	5DT-AF6
7		Steep Roof Flashing	58DVA-F12	1243S	--
8	6	Storm Collar	58DVA-SC	1253	5DT-SC
9	4	Firestop	58DVA-FS	1263	5DT-FS
9		3" Firestop	FS38	FS38	--
10	1	Vinyl Siding Standoff	58DVA-VSS	1250	5DT-VS
11		Attic Insulation Shield (not shown)	58DVA-IS	--	--
12	1	Restrictor Disc	56D3027	56D3027	--

***SIMPSON DURAVENT 58DVA-VC/1280 VERTICAL CAP CANNOT BE USED WITH THIS FIREPLACE.**

For more information about, or instructions for, the venting components referenced above, please contact the component manufaturer:

Selkirk Corporation: www. selkirkcorp.com or 800-992-8368
Simpson Duravent: www. duravent.com or 800-835-4429

Requirements for the Commonwealth of Massachusetts

This product must be installed by a licensed plumber or gas fitter when installed within the Commonwealth of Massachusetts.

Note Regarding Vented Products

Flex line installation must not exceed 36 inches and must have a T shutoff valve.

Any residence with a direct vent product must have a CO detector installed in the residence.

Installation of the fireplace or vented gas log in the State of Massachusetts requires the damper to be permanently removed or welded in the fully open position.

In addition, neither a naturally vented gas log nor a vent-free product may be installed in a bedroom or bathroom in the State of Massachusetts.

All gas fitting and installation of this heater shall only be done by a licensed gas fitter or licensed plumber.

For all side wall horizontally vented gas fueled equipment installed in every dwelling, building or structure used in whole or in part for residential purposes, including those owned or operated by the Commonwealth and where the side wall exhaust vent termination is less than seven (7) feet above finished grade in the area of the venting, including but not limited to decks and porches, the following requirements shall be satisfied:

Installation of Carbon Monoxide Detectors

At the time of installation of the side wall horizontal vented gas fueled equipment, the installing plumber or gas fitter shall observe that a hard wired carbon monoxide detector with an alarm is installed on each additional level of the dwelling, building or structure served by the side wall horizontal vented gas fueled equipment. It shall be the responsibility of the property owner to secure the services of qualified licensed professionals for the installation of hard wired carbon monoxide detectors.

In the event that the side wall horizontally vented gas fueled equipment is installed in a crawl space or an attic, the hard wired carbon monoxide detector with alarm and battery back-up may be installed on the next adjacent floor level.

In the event that the requirements of this subdivision can not be met at the time of completion of installation, the owner shall have a period of thirty (30) days to comply with the above requirements; provided, however, that during said thirty (30) day period, a battery operated carbon monoxide detector with an alarm shall be installed.

Approved Carbon Monoxide Detectors

Each carbon monoxide detector as required in accordance with the above provisions shall comply with NFPA 720 and ANSI/UL 2034 listed and IAS certified.

Signage

A metal or plastic identification plate shall be permanently mounted to the exterior of the building at a minimum height of eight (8) feet above grade directly in line with the exhaust vent terminal for the horizontally vented gas fueled heating appliance or equipment. The sign shall read, in print size no less than one-half (1/2) inch in size, **"GAS VENT DIRECTLY BELOW, KEEP CLEAR OF ALL OBSTRUCTIONS".**

Inspection

The state or local gas inspector of the side wall horizontally vented gas fueled equipment shall not approve the installation unless, upon inspection, the inspector observes carbon monoxide detectors and signage installed in accordance with the provisions of 248 CMR 5.08(2)(a)1 through 4.

Exemptions

The following equipment is exempt from 248 CMR 5.08(2)(a)1 through 4:

- The equipment listed in Chapter 10 entitled "Equipment Not Required To Be Vented" in the most current edition of NFPA 54 as adopted by the Board; and
- Product Approved side wall horizontally vented gas fueled equipment installed in a room or structure separate from the dwelling, building or structure used in whole or in part for residential purposes.

MANUFACTURER REQUIREMENTS

Gas Equipment Venting System Provided

When the manufacturer of Product Approved side wall horizontally vented gas equipment provides a venting system design or venting system components with the equipment, the instructions provided by the manufacturer for installation of the equipment and the venting system shall include:

- Detailed instructions for the installation of the venting system design or the venting system components; and
- A complete parts list for the venting system design or venting system.

Gas Equipment Venting System NOT Provided

When the manufacturer of a Product Approved side wall horizontally vented gas fueled equipment does not provide the parts for venting the flue gases, but identifies "special venting systems", the following requirements shall be satisfied by the manufacturer:

- The referenced "special venting system" instructions shall be included with the appliance or equipment installation instructions; and
- The "special venting systems" shall be Product Approved by the Board, and the instructions for that system shall include a parts list and detailed installation instructions.

A copy of all installation instructions for all Product Approved side wall horizontally vented gas fueled equipment, all venting instructions, all parts lists for venting instructions, and/or all venting design instructions shall remain with the appliance or equipment at the completion of the installation.

LIMITED LIFETIME WARRANTY POLICY

LIFETIME WARRANTY

The following components are warranted for life to the original owner, subject to proof of purchase: Firebox, Combustion Chamber, Heat Exchanger, Grate and Stainless Steel Burners.

FIVE YEAR WARRANTY

The following components are warranted five (5) years to the original owner, subject of proof of purchase: Ceramic Fiber Logs.

BASIC WARRANTY

MHSC warrants the components and materials in your gas appliance to be free from manufacturing and material defects for a period of two years from date of installation. After installation, if any of the components manufactured by MHSC in the appliance are found to be defective in materials or workmanship, MHSC will, at its option, replace or repair the defective components at no charge to the original owner. MHSC will also pay for reasonable labor costs incurred in replacing or repairing such components for a period of two years from date of installation. Any products presented for warranty repair must be accompanied by a dated proof of purchase.

This Limited Lifetime Warranty will be void if the appliance in not installed by a qualified installer in accordance with the installation instructions. The Limited Lifetime Warranty will also be void if the appliance is not operated and maintained according to the operating instructions supplied with the appliance, and does not extend to (1) firebox/burner assembly damage by accident, neglect, misuse, abuse, alterations, negligence of others, including the installation thereof by unqualified installers, (2) the costs of removal, reinstallation or transportation of defective parts on the appliance, or (3) incidental or consequential damage. All service work must be performed by an authorized service representative.

This warranty is expressly in lieu of other warranties, express or implied, including the warranty of merchantability of fitness for purpose and of all other obligations or liabilities. MHSC does not assume for it any other obligations or liabilities in connection with sale or use of the appliance. It states that do not allow limitations on how long an implied warranty lasts, or do not allow exclusion of indirect damage, those limitations of exclusions may not apply to you. You may also have additional rights not covered in the Limited Lifetime Warranty.

MHSC reserves the right to investigate any and all the claims against the Limited Lifetime Warranty and decide upon method of settlement.

IF WARRANTY SERVICE IS NEEDED...

1. Contact your supplier. Make sure you have your warranty, your sales receipt and the model/serial number of your MHSC product.
2. DO NOT ATTEMPT TO DO ANY SERVICE WORK YOURSELF.

Canada

ENERGUIDE

Look for the EnerGuide Gas Fireplace Energy Efficiency Rating in this brochure

Based on CSA P.4.1-02

Efficiency Ratings	
Model	**EnerGuide Ratings Fireplace Efficiency (%)**
VHLDV500NTSC	75.2
VHLDV500PTSC	69.8

MHSC
149 Cleveland Drive • Paris, Kentucky 40361
www.mhsc.com