This Owner's Manual is provided and hosted by Appliance Factory Parts.

Appliance Factory Parts
Experts in BBQ, Humidifier, & Appliance Parts
1-800-955-7075

Vermont Castings RESOLUTION Owner's Manual

Shop genuine replacement parts for Vermont Castings RESOLUTION

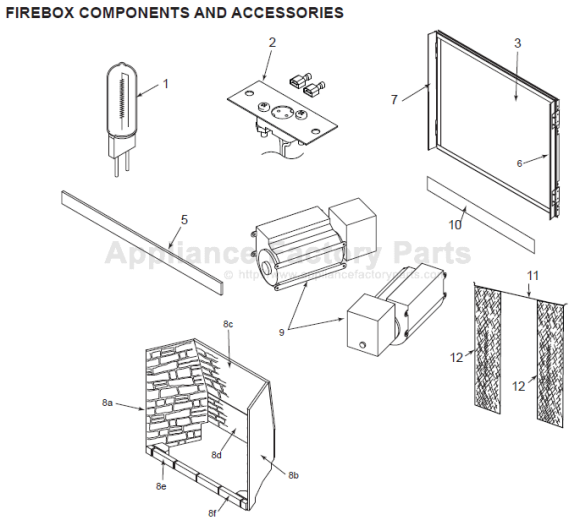

Find Your Vermont Castings Fireplace Parts - Select From 28 Models

-------- Manual continues below --------

VERMONT CASTINGS

Resolution
Direct Vent Gas Fireplace System

Warmth & Beauty

Built Vermont Proud and Strong

VERMONT CASTINGS

Introducing the Vermont Castings Resolution direct vent fireplace system

There is a special place in the Northeast where the warmest seasons of the year are those spent around hearth and home. This special place is Vermont, and at its heart is the foundry. Here fire, friendship and family are woven together with the hand-crafted heritage of Vermont Castings. Now, you can bring some of this magic home with the Resolution direct vent fireplace system. Its large, clear ceramic glass window offers 1080 square inches of viewing area to truly enjoy the warmth and ambiance of the dancing flames. Its dual burner design allows you to shut off the rear burner to reduce the BTUs from 50,000 to 17,000 — making it perfect for installation in nearly any space. The Total Signature Command™ System, including full function handheld remote, provides one of a kind electronic ignition with battery back up — meaning you can operate your gas fireplace even in a power outage — and the ability to turn off the standing pilot makes the Resolution an energy efficient choice as well. With optional Black Texture hand forged arched doors and standard American Ledgestone firebrick walls and hearth brick, the Vermont Castings Resolution offers you the opportunity to weave your own warm memories around hearth and home.

Vermont Castings Resolution

Model	Fuel Type	BTU Max	BTU Min	BTU With rear burner turn down	Framing Dimensions Width	Framing Dimensions Height	Framing Dimensions Depth	Glass View Dim. Width	Glass View Dim. Height	FE Ratings (Cdn Fireplace Efficiency)	Certifying Org.
Resolution											
VHLDV500NTSC	NG	50,000	35,500	17,000	49-5/16″	44-3/4″	23-7/8″	36″	30″	75.2%	CSA
VHLDV500PTSC	LP	50,000	38,500	17,000	49-5/16″	44-3/4″	23-7/8″	36″	30″	69.8%	CSA

Standard Features

- Vermont Castings select American Ledgestone firebrick walls and hearth brick
- Total Signature Command™ System installed
- Blower and andirons standard
- Top venting only with 5″x 8" direct vent pipe. Requires 24″ vertical rise before 90 degree elbow on horizontal runs
- Clear-View ceramic glass
- Features Vermont Castings exclusive decorative fettle grate and andirons
- Accent light standard
- TSFRSC full function touch screen remote control

See our Ambient Technologies® catalog for a complete line of remotes and thermostats.

Resolution shown with standard andirons

Resolution shown with optional doors

Optional Accessories

- With optional Black Textured arched doors with hand forged designer inlays

Resolution with standard andirons shown on cover

For more information about MHSC and Vermont Castings efficient and environmentally friendly products, please visit www.vermontcastings.com

green

LIFETIME WARRANTY · MADE IN U.S.A. · NFI ADVOCATE · HPBA Hearth, Patio & Barbecue Association · HPBAC Hearth, Patio & Barbecue Association of Canada PROTECT • PROMOTE • EDUCATE · AHRI MEMBER · ENERGUIDE

A Brand of Monessen Hearth Systems Co.
149 Cleveland Drive, Paris, Kentucky 40361
www.vermontcastings.com

Your Vermont Castings Dealer:

To avoid personal injury or property damage, the product described by this brochure must be installed, operated and maintained in strict compliance with the instructions packaged with the product and all applicable building or fire codes. Contact local building or fire officials about restrictions and installation inspection requirements. All photographs and drawings on this brochure are for illustrative purposes only and are not intended for, nor should they be used as a substitute for the instructions packaged with the unit. Appearance and specifications of the product are subject to change without notice. © 20010 Monessen Hearth Systems Co.

Ver.02 VC1209