This Owner's Manual is provided and hosted by Appliance Factory Parts.

Appliance Factory Parts
Experts in BBQ, Humidifier, & Appliance Parts
1-800-955-7075

Vermont Castings RESOLUTION Owner's Manual

Shop genuine replacement parts for Vermont Castings RESOLUTION

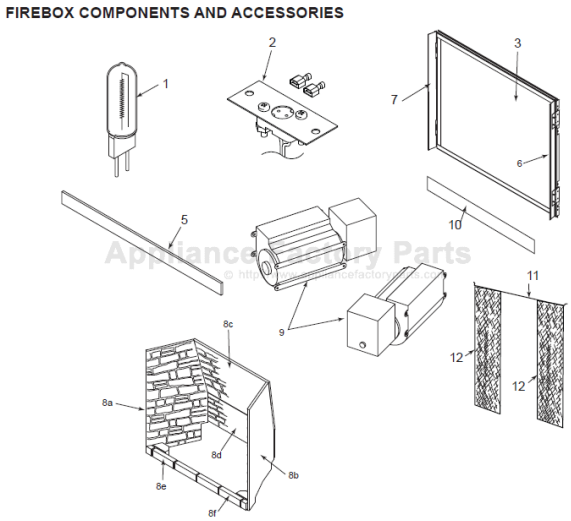

Find Your Vermont Castings Fireplace Parts - Select From 28 Models

-------- Manual continues below --------

PRODUCT SPECIFICATIONS

Resolution Direct Vent Gas Fireplace System

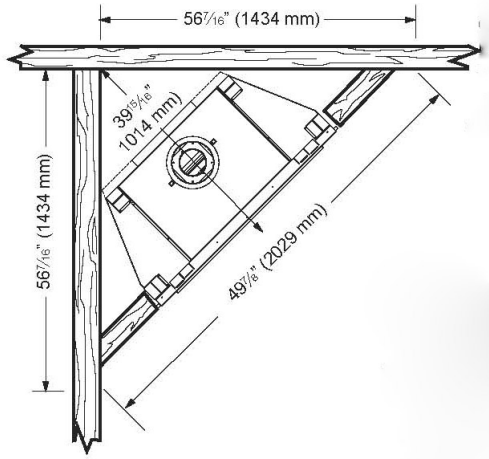

GLASS VIEWING AREA

36" x 30" H (1080 Square Inches)

TECHNICAL INFORMATION

Maximum Heat Output: 50,000 BTU/hr

Fuel type: NG and LP

Vermont Castings select American Ledgestone firebrick walls with hearth brick

Total Signature Command System installed includes full function hand held touch screen remote

Blower and andirons standard

Top venting only with 5"x 8" direct vent pipe. Requires 24" vertical rise before 90 degree elbow on horizontal runs

Clear-View ceramic glass

Features Vermont Castings exclusive decorative fettle grate and andirons

Accent light standard

CSA Certified

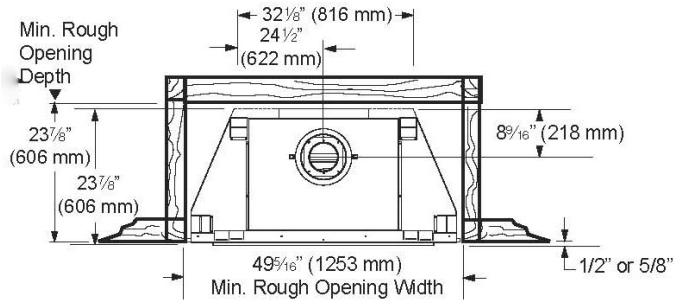

FIELD INSTALLED ACCESSORIES

Optional Black Textured arched doors with hand forged designer inlays

Field Conversion Kits

Signature Command Wall Mount Extension Kit

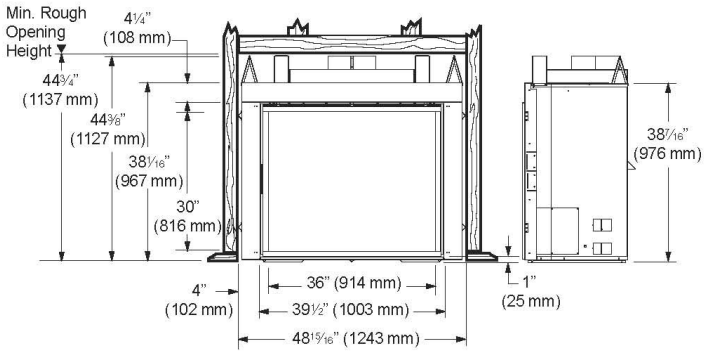

MADE IN U.S.A.

A Brand of Monessen Hearth Systems Co.
149 Cleveland Drive, Paris, Kentucky 40361
www.vermontcastings.com

To avoid personal injury or property damage, the product described by this brochure must be installed, operated and maintained in strict compliance with the instructions packaged with the product and all applicable building or fire codes. Contact local building or fire officials about restrictions and installation inspection requirements. All photographs and drawings on this brochure are for illustrative purposes only and are not intended for, nor should they be used as a substitute for the instructions packaged with the unit. Appearance and specifications of the product are subject to change without notice. © 2010 Monessen Hearth Systems Co.