This Owner's Manual is provided and hosted by Appliance Factory Parts.

Appliance Factory Parts
Experts in BBQ, Humidifier, & Appliance Parts
1-800-955-7075

Vermont Castings ENCORE 2040 Owner's Manual

Shop genuine replacement parts for Vermont Castings ENCORE 2040

Find Your Vermont Castings Wood or Gas Stove Parts - Select From 53 Models

-------- Manual continues below --------

Defiant and Encore

Introducing the First and Only **TWO-IN-ONE** Wood Burning Stoves

ONE STOVE, COUNTLESS BENEFITS

TWO WAYS TO HEAT

SUPERIOR EFFICIENCY

EASY TO USE

Tradition + INNOVATION

In the heart of Vermont, where the traditions of hearth and home have stood the test of time, you'll find our foundry. For over 30 years, we've combined the tradition of forged cast iron with new technologies to bring you timeless beauty and the latest innovations. And now, we continue that tradition by offering the exclusive combination of catalytic and non-catalytic technology all in one stove. For the first time, you can enjoy the best of both worlds with our new **TWO-IN-ONE Defiant** + **Encore** wood burning stoves.

ENCORE TWO-IN-ONE
Enamel Biscuit

Another Exclusive Innovation from Vermont Castings

Unlike any other wood stove available on the market today, the new Defiant and Encore wood stoves are essentially two stoves in one: Letting you enjoy the superior efficiency of catalytic operation or the convenience of non-catalytic operation, based on your preference. Regardless of which method you prefer, you can be assured your heat and efficiency needs are being met in one simple-to-use stove. Whether you're looking for a catalytic stove as a primary heat source for longer, more even heating or a non-catalytic stove for easy operation and beautiful flames, these new two-in-one stoves offer an unbeatable combination of superior heating, efficiency and convenience.

Guaranteed to Last

Vermont Castings boasts the most comprehensive warranty in the industry. The two-in-one stoves come with a Limited Lifetime Warranty on all castings, combustion systems and door glass. In fact, the burn system is made of the same ceramic materials used to line the drums in our foundry and can handle temperatures up to 3,000° F.

Defiant TWO-IN-ONE wood burning stove

Clearance Chart for 6" and 8" Connections ONLY

Single or Double Wall Pipe[1]

		UNPROTECTED SURFACE		PROTECTED SURFACE[2]	
		TOP VENT	REAR VENT	TOP VENT	REAR VENT
Wall to side edge of cast iron top	A	21" (534 mm)	21" (534 mm)	5" (127 mm)	11" (280 mm)
Wall to back of rear heat shield	B	15" (381 mm)	10" (254 mm)	3" (77 mm)	10" (254 mm)
Wall to corner of cast iron top	C	5" (127 mm)	N/A	2" (51 mm)	N/A
Wall to rear edge of cast iron top	D	21" (534 mm)	16" (407 mm)	9" (229 mm)	16" (407 mm)
Side wall to center of flue collar	E	37" (940 mm)	37" (940 mm)	21" (534 mm)	27" (686 mm)
Rear wall to center of flue collar	F	20.5" (534 mm)	N/A	8.5" (216 mm)	N/A

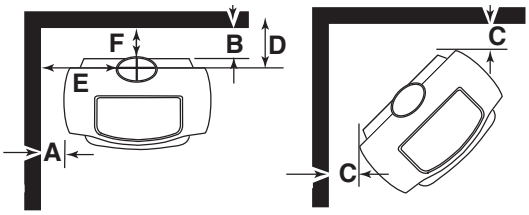

Stove in corner

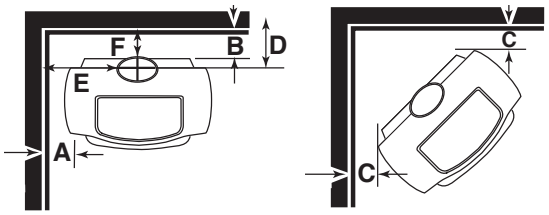

Stove installed parallel to wall

Stove in corner

1. Using listed double wall oval to 6" or 8" round connector; all installations require supplied rear heat shield, flue collar shield and bottom heat shield.

2. Must use connector pipe heat shield and it must extend 36" (914 mm) above flue collar.

PLEASE NOTE: These instructions are not intended for installation purposes. Please refer to the product manual for complete installation details.

Product Dimensions

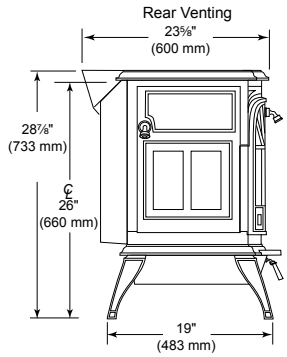

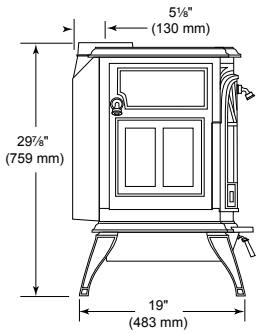

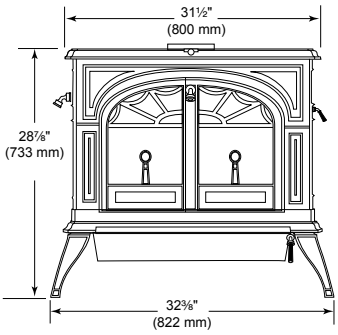

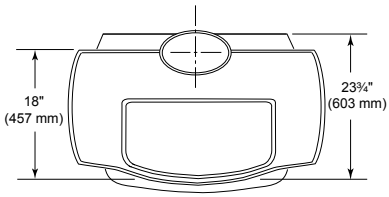

Available in Two Different Sizes

	Defiant TWO-IN-ONE	Encore TWO-IN-ONE
HEATING CAPACITY	Up to 14 Hours of Continuous Heat	Up to 12 Hours of Continuous Heat
	2,400 Square Feet	1,800 Square Feet
	75,000 BTUs	65,000 BTUs
FIREBOX CAPACITY	Accommodates 24" Logs	Accommodates 22" Logs
	Up to 75 lbs of Fuel	Up to 50 lbs of Fuel
	3.2 Cubic Feet	2.3 Cubic Feet
EFFICIENCY	CAT Mode: 84% at 1.1 g/hr	CAT Mode: 86% at 1.2 g/hr
	Non-CAT Mode: 76% at 2.3 g/hr	Non-CAT Mode: 78% at 1.5 g/hr
ADDITIONAL FEATURES	Exclusive CAT and Non-CAT Combo	Exclusive CAT and Non-CAT Combo
	Exclusive Thermostatic Control	Exclusive Thermostatic Control
	Gasket Sealing	Gasket Sealing
	Exclusive Smooth Glide System	Exclusive Smooth Glide System
	Limited Lifetime Warranty	Limited Lifetime Warranty
INSTALLATION	Top or Rear Exit	Top or Rear Exit
	Reduced Clearance Required	Reduced Clearance Required
	8" Oval Reversible Flue Collar	6" Flue Collar
	Leg Levelers	Leg Levelers
	Weight: 518 lbs	Weight: 471 lbs
	32⅜" W x 28⅞"H x 19"D	27" W x 25¾"H x 22¾"D
AVAILABLE ACCESSORIES	Blower	Blower
	Warming Shelf	Warming Shelf
	Outdoor Venting Kit	Outdoor Venting Kit
AVAILABLE COLORS	ENAMEL BISCUIT	
	ENAMEL EBONY BLACK	
	ENAMEL BORDEAUX	
	MAJOLICA BROWN	
	CLASSIC BLACK	

OMNI CERTIFIED

OMNI's product testing programs are accredited by national and international accreditation bodies, including the American National Standards Institute (ANSI), the Standards Council of Canada (SCC), the International Accreditation Service, Inc. (IAS), and the U.S. Environmental Protection Agency (EPA).

MADE IN U.S.A.

LIFETIME LIMITED WARRANTY

Your Vermont Castings Dealer:

MADE GREEN with recycled iron and reused raw materials

To avoid personal injury or property damage, the product described by this brochure must be installed, operated and maintained in strict compliance with the instructions packaged with the product and all applicable building or fire codes. Contact local building or fire officials about restrictions and installation inspection requirements. All photographs and drawings on this brochure are for illustrative purposes only and are not intended for, nor should they be used as a substitute for the instructions packaged with the unit. Appearance and specifications of the product are subject to change without notice. © 2010 Monessen Hearth Systems Co. MHSC-10666

A Brand of Monessen Hearth Systems Co.
149 Cleveland Drive, Paris, Kentucky 40361
www.vermontcastings.com

VER.01 VC1310