This Owner's Manual is provided and hosted by Appliance Factory Parts.

Appliance Factory Parts
Experts in BBQ, Humidifier, & Appliance Parts
1-800-955-7075

Vermont Castings RADIANCE RADVTBM Owner's Manual

Shop genuine replacement parts for Vermont Castings RADIANCE RADVTBM

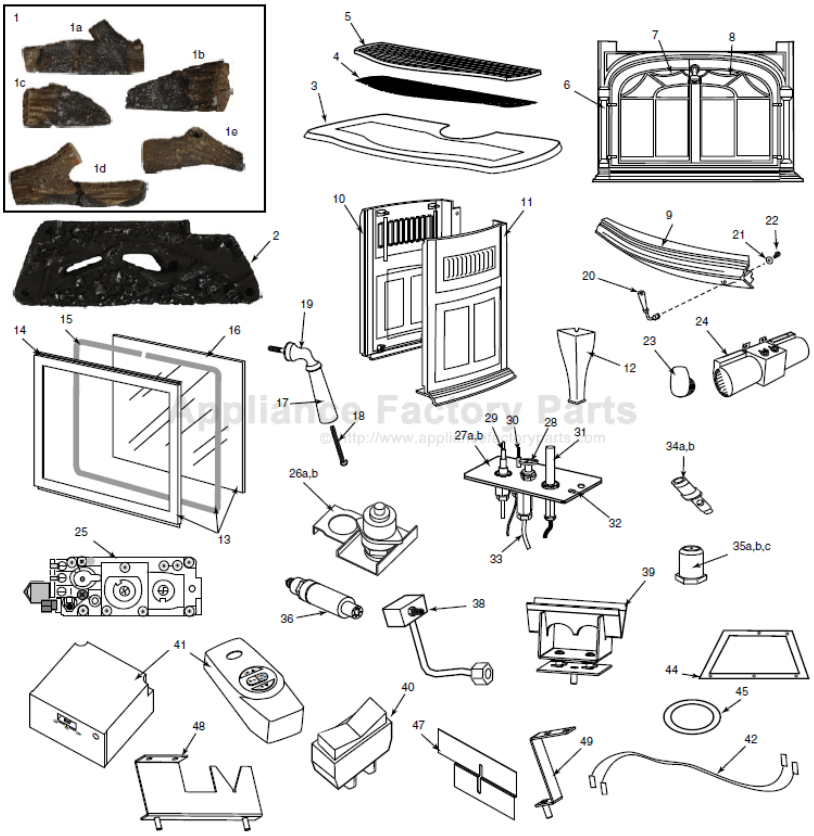

Find Your Vermont Castings Wood or Gas Stove Parts - Select From 53 Models

-------- Manual continues below --------

INSTALLER / CONSUMER SAFETY INFORMATION

PLEASE READ THIS MANUAL BEFORE INSTALLING AND USING APPLIANCE.

WARNING!
IF THE INFORMATION IN THIS MANUAL IS NOT FOLLOWED EXACTLY, A FIRE OR EXPLOSION MAY RESULT CAUSING PROPERTY DAMAGE, PERSONAL INJURY OR LOSS OF LIFE.

FOR YOUR SAFETY

Installation and service must be performed by a qualified installer, service agency or the gas suppler.

WHAT TO DO IF YOU SMELL GAS:

- **Do not try to light any appliance.**
- **Do not touch any electric switch; do not use any phone in your building.**
- **Immediately call your gas supplier from your neighbor's phone. Follow the gas supplier's instructions.**
- **If you cannot reach your gas supplier, call the fire department.**

DO NOT STORE OR USE GASOLINE OR OTHER FLAMMABLE VAPORS AND LIQUIDS IN THE VICINITY OF THIS OR ANY OTHER APPLIANCE.

This appliance may be installed in an after market permanently located manufactured (mobile) home where not prohibited by local codes.

This appliance is only for use with the type of gas indicated on the rating plate.

This appliance is not convertible for use with other gases unless a certified kit is used.

VERMONT CASTINGS

Radiance®
Direct Vent Gas Heater

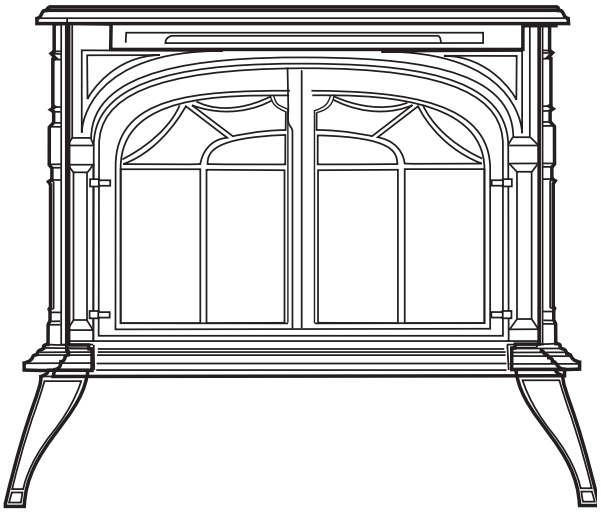

Models:

RADVT Series: RADVTCB, RADVTEB, RADVTBS, RADVTBD, RADVTBM
RADVTCS Series: RADVTCSCB, RADVTCSEB, RADVTCSBS, RADVTCSBD, RADVTCSBM

Homeowner's Installation and Operating Manual

DESIGN CERTIFIED

CERTIFIED

INSTALLER: Leave this manual with the appliance.
CONSUMER: Retain this manual for future reference.

30004967 8/10 Rev. 5

Table of Contents

PLEASE READ THE INSTALLATION & OPERATING INSTRUCTIONS BEFORE USING APPLIANCE.
Thank you and congratulations on your purchase of a Vermont Castings stove.
IMPORTANT: Read all instructions and warnings carefully before starting installation. Failure to follow these instructions may result in a possible fire hazard and will void the warranty.

Installation & Operating Instructions
General Information 3
Installation Requirements for the Commonwealth of Massachusetts 4
Stove Dimensions 5
Installation Requirements 6
Locating the Stove 6
Clearance Requirements 6
Parallel Installation 7
Corner Installation 7
Wall and Ceiling Clearances 7
Hearth Requirements 7
Gas Specifications 8
Gas Inlet and Manifold Pressures 8
High Elevations 8
Horizontal Termination 8
Vertical Termination 9
Restrictor Plate Adjustment for Extended Pipe Runs 9
Vent Termination Clearances 10
General Venting Information - Termination Location 11
Termination Clearances 12
Venting Requirements and Options 13

Assembly Procedures
Tools Required 15
Parts Bag Contents 15
Unpack and Assemble Legs 15
Install Optional Fan 16
Venting System Assembly - Direct Vent 17
Install Vent Adapter Pipe (MHSC Corporation Components) 17
Install Vent Adapter Pipe (Simpson Dura-Vent Components) 17
Install Vent Adapter Pipe (Selkirk Corporation Components) 18
Side Wall Termination Assembly 18
Vent Termination Below Grade 20
Vertical (Through the Roof) Vent Assembly 20
Selkirk Direct-Temp Metalbestos Direct Vent System 21
Install Log Set 26
Connect Gas Supply Line 28
Burner Information 28
Install ON/OFF Switch 29
Thermostat Connection (Optional) 29
Receiver Installation - RADVTCS Series 29
Install the Mesh and Grille 29

Operation
Your First Fire 29
Pilot and Burner Inspection 29
Flame & Temperature Adjustment 30
Flame Characteristics 30
Lighting and Operating Instructions 31
Troubleshooting - SIT NOVA 820 (RADVT Series) 32
Instructions for RCSITEA 33
Troubleshooting RCSITEA 36
Fuel Conversion Instructions 37

Maintenance
Annual System Inspection 41
Logset and Burner/Cleaning and Inspection 41
Care of Cast Iron 41
Cleaning the Glass 41
Glass Replacement 41
Gasket Replacement 42
Inspect the Vent System Annually 42
Check the Gas Flame Regularly 42
Wiring Diagrams 43

Replacement Parts 45
Optional Accessories 49
Warranty 51

Installation & Operating Instructions

The Radiance Direct Vent Room Heater, Model Nos. RADVTCB, RADVTEB, RADVTBS, RADVTBD, RADVTBM, RADVTCSCB, RADVTCSEB, RADVTCSBS, RADVTCSBD, RADVTCSBM, is a vented gas appliance listed to the ANSI Standard Z21.88-2009 and CSA 2.33-2009 for Vented Room Heaters, and CSA 2.17-M91, Gas-Fired Appliances For Use at High Altitudes.

The installation of the Radiance Direct Vent Room Heater must conform with local codes, or in the absence of local codes, with National Fuel Gas Code, ANSI Z223.1/NFPA 54 — latest edition and CSA B-149.1 Installation Code. (EXCEPTION: Do not derate this appliance for altitude. Maintain the manifold pressure at 3.5 inches w.c. for Natural Gas and 10 inches w.c. for LP gas at maximum input.)

This appliance is only for use with the type of gas indicated on the rating plate. This appliance is not convertible for use with other gases unless a certified kit is used.

Installation and replacement of gas piping, gas utilization equipment or accessories, and repair and servicing of equipment shall be performed only by a qualified agency, preferably NFI or WETT (Canada) certified. The term "qualified agency" means any individual, firm, corporation, or company that either in person or through a representative is engaged in and is responsible for (a) installation or replacement of gas piping, or (b), the connection, installation, repair, or servicing of equipment, who is experienced in such work, familiar with all precautions required, and has complied with all the requirements of the authority having jurisdiction.

The Radiance Direct Vent Room Heater should be inspected before use and at least annually by a qualified service agency. It is imperative that control compartments, burners, and circulating air passageways of the appliance be kept clean.

The Radiance Direct Vent Room Heater and its individual shut-off valve must be disconnected from the gas supply piping during any pressure testing of that system at test pressures in excess of 1/2 psig (3.5 kPa).

The Radiance Direct Vent Room Heater must be isolated from the gas supply piping system by closing its individual manual shutoff valve during any pressure testing of the gas supply piping system at test pressures equal to or less than 1/2 psig.

An accessible tap is located above the pilot/On-Off knob for checking the inlet pressure.

'Direct Vent' describes a sealed combustion system in which incoming outside air for combustion and outgoing exhaust enter and exit through two separate concentric passages within the same sealed vent system. The system does not use room air to support combustion. The Direct Vent system permits the gas appliance to be vented directly to the outside atmosphere through the side of the house or vertically through the roof. Conventional venting systems (Natural Vent) take air from the room for combustion and vent the exhaust vertically through the roof to the atmosphere.

This appliance is approved for bedroom installations in the U.S. and Canada.

This appliance may be installed in an aftermarket* manufactured (mobile) home, where not prohibited by state or local codes.

WARNING: Operation of this heater when not connected to a properly installed and maintained venting system can result in carbon monoxide (CO) poisoning and possible death.

The Radiance Direct Vent Room Heater, when installed, must be electrically grounded in accordance with local codes or, in the absence of local codes, with the National Electrical Code ANSI/NFPA 70, (latest edition), or of the current Canadian Electrical Code C22.1.

Due to high temperatures this appliance should be located out of traffic and away from furniture and draperies.

WARNING: This appliance is hot while in operation. Keep children, clothing, and furniture away. Contact may cause burns or ignition of combustible materials.

Children and adults should be alerted to the hazards of high surface temperatures and should stay away to avoid burns or clothing ignition.

Young children should be carefully supervised when they are in the same room as the appliance. Toddlers, young children and others may be susceptible to accidental contact burns. A physical barrier is recommended if there are at risk individuals in the house. To restrict access to a fireplace or stove, install an adjustable safety gate to keep toddlers, young children and other at risk individuals out of the room and away from hot surfaces.

Clothing or other flammable materials should not be placed on or near the appliance.

Any safety screen, glass or guard removed for servicing an appliance must be replaced prior to operating the appliance.

The appliance area must be kept clear and free from combustible materials, gasoline, and other flammable vapors and liquids.

The flow of combustion and ventilation air must not be obstructed. The installation must include adequate accessibility and clearance for servicing and proper operation.

WARNING: Do not operate the Room Heater with the glass panel removed, cracked or broken. Replacement of the panel should be done by a licensed or qualified service person.

Do not use this appliance if any part has been under water. Immediately call a qualified service technician to inspect the appliance and to replace any part of the control system and any gas control which has been under water.

Do not burn wood, trash or any other material for which this appliance was not designed. This appliance is designed to burn either natural gas or propane only.

This gas appliance must not be connected to a chimney flue serving a separate solid-fuel burning appliance.

CAUTION: Label all wires prior to disconnection when servicing controls. Wiring errors can cause improper and dangerous operation.

Verify proper operation after servicing.

**** Aftermarket:*** *Completion of sale, nor for purpose of resale, from the manufacturer.*

Installation & Operating Instructions

Requirements for the Commonwealth of Massachusetts

All gas fitting and installation of this heater shall only be done by a licensed gas fitter or licensed plumber.

For all side wall horizontally vented gas fueled equipment installed in every dwelling, building or structure used in whole or in part for residential purposes, including those owned or operated by the Commonwealth and where the side wall exhaust vent termination is less than seven (7) feet above finished grade in the area of the venting, including but not limited to decks and porches, the following requirements shall be satisfied:

Installation of Carbon Monoxide Detectors

At the time of installation of the side wall horizontal vented gas fueled equipment, the installing plumber or gas fitter shall observe that a hard wired carbon monoxide detector with an alarm is installed on each additional level of the dwelling, building or structure served by the side wall horizontal vented gas fueled equipment. It shall be the responsibility of the property owner to secure the services of qualified licensed professionals for the installation of hard wired carbon monoxide detectors.

In the event that the side wall horizontally vented gas fueled equipment is installed in a crawl space or an attic, the hard wired carbon monoxide detector with alarm and battery back-up may be installed on the next adjacent floor level.

In the event that the requirements of this subdivision can not be met at the time of completion of installation, the owner shall have a period of thirty (30) days to comply with the above requirements; provided, however, that during said thirty (30) day period, a battery operated carbon monoxide detector with an alarm shall be installed.

Approved Carbon Monoxide Detectors

Each carbon monoxide detector as required in accordance with the above provisions shall comply with NFPA 720 and ANSI/UL 2034 listed and IAS certified.

Signage

A metal or plastic identification plate shall be permanently mounted to the exterior of the building at a minimum height of eight (8) feet above grade directly in line with the exhaust vent terminal for the horizontally vented gas fueled heating appliance or equipment. The sign shall read, in print size no less than one-half (1/2) inch in size, **"GAS VENT DIRECTLY BELOW, KEEP CLEAR OF ALL OBSTRUCTIONS".**

Inspection

The state or local gas inspector of the side wall horizontally vented gas fueled equipment shall not approve the installation unless, upon inspection, the inspector observes carbon monoxide detectors and signage installed in accordance with the provisions of 248 CMR 5.08(2)(a)1 through 4.

Exemptions

The following equipment is exempt from 248 CMR 5.08(2)(a)1 through 4:

- The equipment listed in Chapter 10 entitled "Equipment Not Required To Be Vented" in the most current edition of NFPA 54 as adopted by the Board; and
- Product Approved side wall horizontally vented gas fueled equipment installed in a room or structure separate from the dwelling, building or structure used in whole or in part for residential purposes.

MANUFACTURER REQUIREMENTS

Gas Equipment Venting System Provided

When the manufacturer of Product Approved side wall horizontally vented gas equipment provides a venting system design or venting system components with the equipment, the instructions provided by the manufacturer for installation of the equipment and the venting system shall include:

- Detailed instructions for the installation of the venting system design or the venting system components; and
- A complete parts list for the venting system design or venting system.

Gas Equipment Venting System NOT Provided

When the manufacturer of a Product Approved side wall horizontally vented gas fueled equipment does not provide the parts for venting the flue gases, but identifies "special venting systems", the following requirements shall be satisfied by the manufacturer:

- The referenced "special venting system" instructions shall be included with the appliance or equipment installation instructions; and
- The "special venting systems" shall be Product Approved by the Board, and the instructions for that system shall include a parts list and detailed installation instructions.

A copy of all installation instructions for all Product Approved side wall horizontally vented gas fueled equipment, all venting instructions, all parts lists for venting instructions, and/or all venting design instructions shall remain with the appliance or equipment at the completion of the installation.

Radiance Direct Vent Stove Dimensions

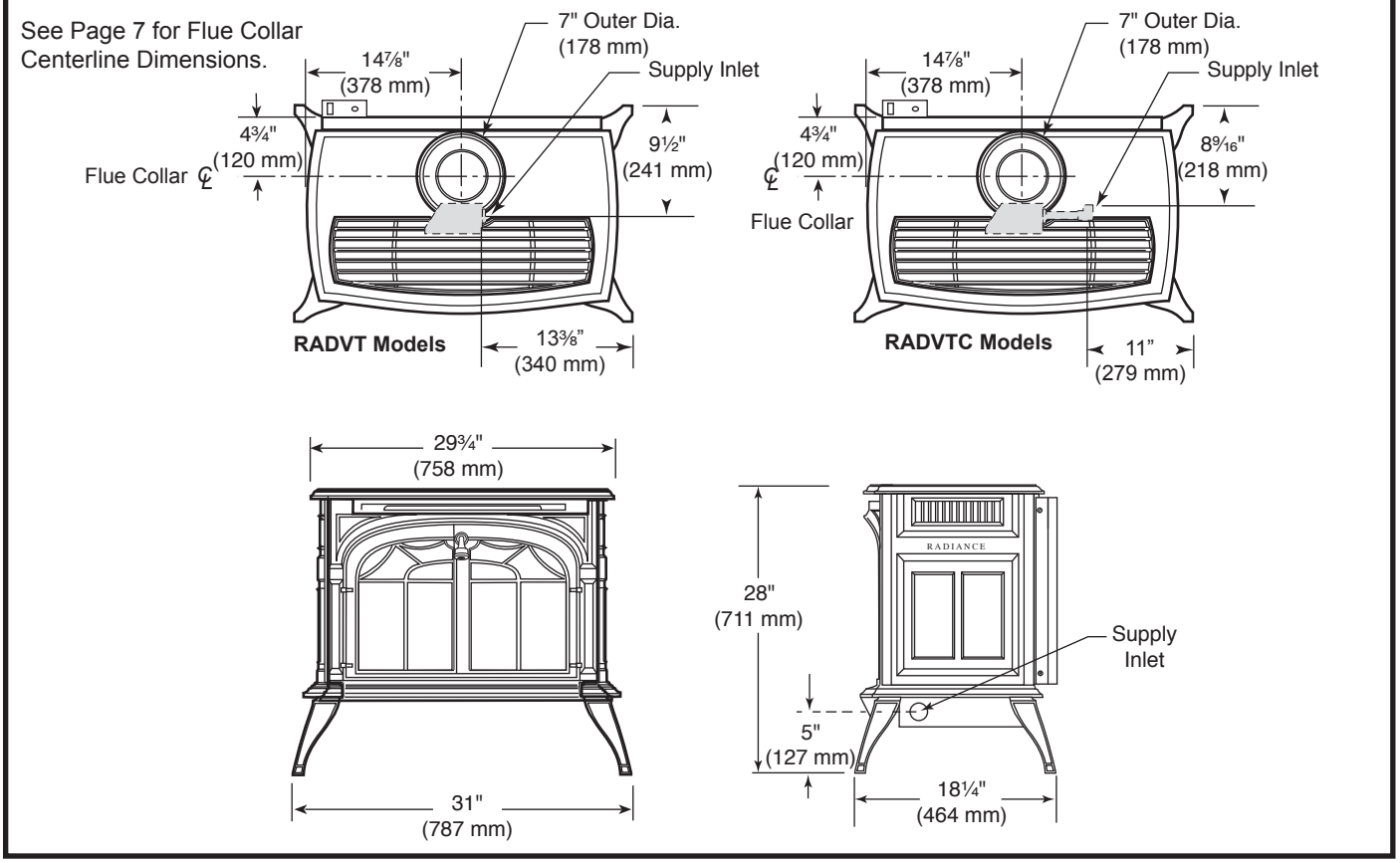

Fig. 1 Radiance dimensions.

Proposition 65 Warning: Fuels used in gas, woodburning or oil fired appliances, and the products of combustion of such fuels, contain chemicals known to the State of California to cause cancer, birth defects and other reproductive harm.
California Health & Safety Code Sec. 25249.6

Radiance Direct Vent Certified to:
ANSI Z21.88-2009 / CSA 2.33-2009 Vented Gas Fireplace Heaters

Installation Requirements

The installation must conform with local codes or, in the absence of local codes, with the National Fuel Gas Code, ANSI Z223.1/NFPA 54 - latest edition. (EXCEPTION: Do not derate this appliance for altitude. Maintain the manifold pressure at 3.5” w.c. for Natural Gas, and 10” w.c. for Propane).

In Canada, installation must be in accordance with the current CSA B-149.1 Installation Codes and/or local codes.

The installation should be done by a qualified service person who is familiar with the building codes and installation techniques appropriate for your area to accomplish a safe and effective installation.

Your dealer or your local gas supplier will be able to refer a qualified service person.

WARNING: Due to high temperatures, the HEATER should be located out of traffic and away from furniture and draperies.

The surface of the Heater Is hot when it is in use. Young children should be watched carefully when they are in the same room when the Heater is in use, and they should be taught to avoid the hot surface. Keep any objects that can burn well away from the Heater, and observe the recommended clearances that follow.

WARNING

HOT GLASS WILL CAUSE BURNS.

DO NOT TOUCH GLASS UNTIL COOLED.

NEVER ALLOW CHILDREN TO TOUCH GLASS.

Locating The Stove

In choosing a location for the stove, consider:

- The location of outside walls;
- Where additional heat is needed:
- Where family members gather most often;
- The vent system requirements.

NOTE: We do not recommend the use of wallpaper next to this stove. Over time, radiant heat may cause the wallpaper to shrink, or may adversely affect the binders in the wallpaper adhesive.

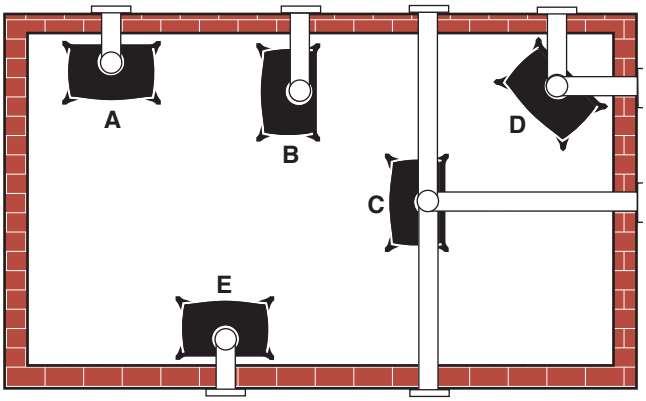

Fig. 2 Possible stove locations.

Clearance Requirements

Minimum Clearances to Combustible Materials

Measure side clearances as shown in Figures 3, 4 and 5 from the outer edge of the cast iron stove top. Measure rear clearances from the outermost surface of the steel rear skirt.

The Radiance heater is approved for installation into an alcove constructed of combustible materials to the dimensions and clearances shown on the next page.

The same clearances apply in a standard parallel installation.

WARNING:

- **Always maintain required clearances (air spaces) to nearby combustibles to prevent fire hazard. Do not fill air spaces with insulation. All venting components must maintain a 1” (25mm) clearance to combustible materials. Maintain a 6” (150mm) clearance when using single wall pipe.**
- **The gas appliance and vent system must be vented directly to the outside of the building and never be attached to a chimney serving a separate solid fuel or gas-burning appliance.**
- **Refer to the manufacturer’s instructions included with the venting system for complete installation procedures.**

Parallel Installation: Minimum Clearance and Flue Centerline

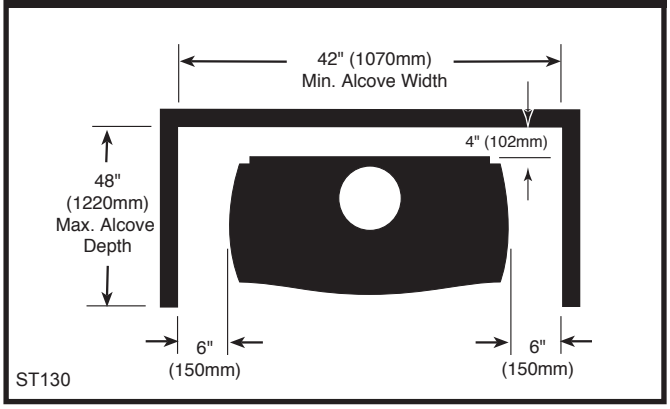

Fig. 3 Parallel installation, minimum back and side clearances, and flue centerlines.

Corner Installation: Minimum Clearance and Flue Centerline

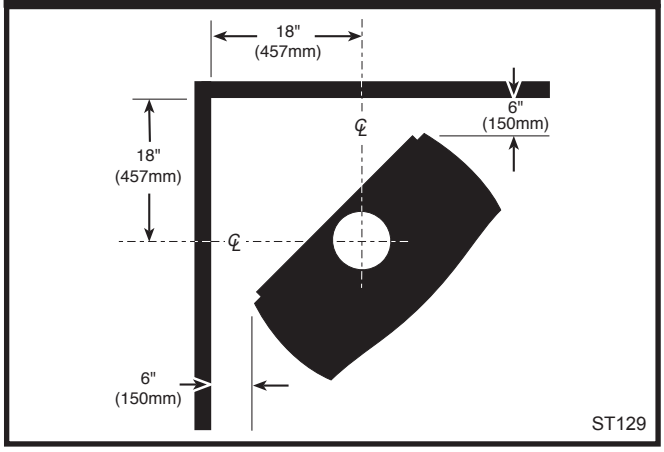

Fig. 4 Corner installation, minimum corner clearances and flue centerline.

Wall Centerline from Floor

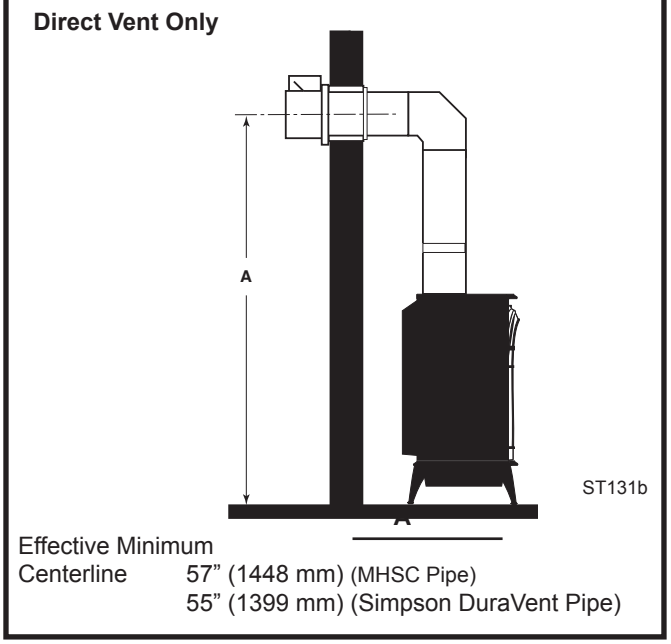

Fig. 5 Minimum wall centerline.

Wall and Ceiling Clearances

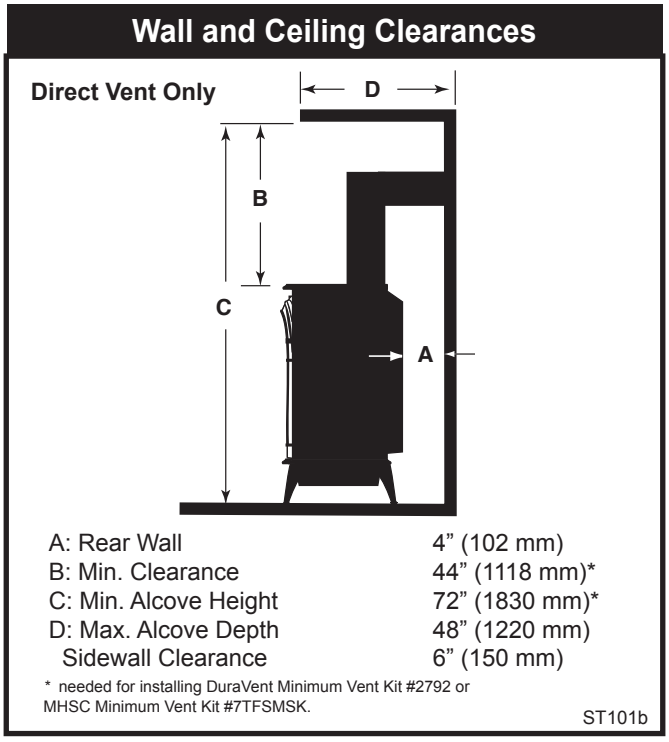

Fig. 6 Dimensions and clearances to ceiling or alcove.

Hearth Requirements

The Radiance Heater must be installed on rigid flooring. When the heater is installed directly on any combustible surface other than wood flooring, a metal or wood panel extending the full width and depth of the unit must be used as the hearth. There are no other hearth requirements.

Gas Specifications

Model	Fuel	Gas Control	Max. Input BTU/h	Min. Input BTU/h
RADVT Series	Nat	Millivolt Manual	38,000	25,000
RADVT Series	Prop	Millivolt Manual	36,000	25,000
RADVTCS Series	Nat	Millivolt Hi/Lo	38,000	25,000
RADVTCS Series	Prop	Millivolt Hi/Lo	36,000	25,000

Weight: Fully assembled; 350 lbs.

Gas Inlet and Manifold Pressures

	Natural	LP (Propane)
Inlet Minimum	5.5” w.c.	11.0” w.c.
Inlet Maximum	14.0” w.c.	14.0” w.c.
Manifold Pressure	3.5” w.c.	10” w.c.

The installation of your Vermont Castings stove must conform with local codes, or in the absence of local codes, with the National Fuel Gas Code ANSI Z223.1/NFPA 54 - latest edition, or CSA B149.1 Installation code. (EXCEPTION: Do not derate this appliance for altitude up to 2,000 (610 m) for natural gas and 4,500 feet (1,370 m) for LP Gas. Maintain the manifold pressure at 3.5” w.c. for Natural Gas and 10.0” w.c. for LP Gas.

High Elevations

Input ratings are shown in BTU per hour and are certified without deration for elevations up to 2,000 feet (610 m) for natural gas and 4,500 feet (1,370 m) for LP gas above sea level.

In the USA installations with elevations above 2,000 feet (610 m) for natural gas and 4,500 feet (1,370 m) for LP gas must be in accordance with the current ANSI Z223.1/NFPA 54 and/or local codes having jurisdiction.

In Canada, please consult provincial and/or local authorities having jurisdiction for installations at elevations above 2,000 feet (610 m) for natual gas and 4,500 feet (1,370 m) for LP gas.

WARNING: Improper installation, adjustment, alteration, service or maintenance can cause injury or property damage. Refer to this manual for correct installation and operational procedures. For assistance or additional information consult a qualified installer, service agency, or the gas supplier.

Horizontal Termination

The vent must rise vertically a minimum of 24” (610 mm) off the top of the unit, before the first elbow. The horizontal run may extend up to 20’ (6m) and include a vertical rise of up to 40’ (12 m). (Fig. 7) Horizontal termination must also meet the criteria shown in Figures 10 through 12.

- Approved vent systems must terminate above and including the heavy line in Figure 7.
- Two 45° elbows may be substituted for each single 90° elbow.
- With a rise between 2’ - 5’, one 90° or two 45° elbows may be used.

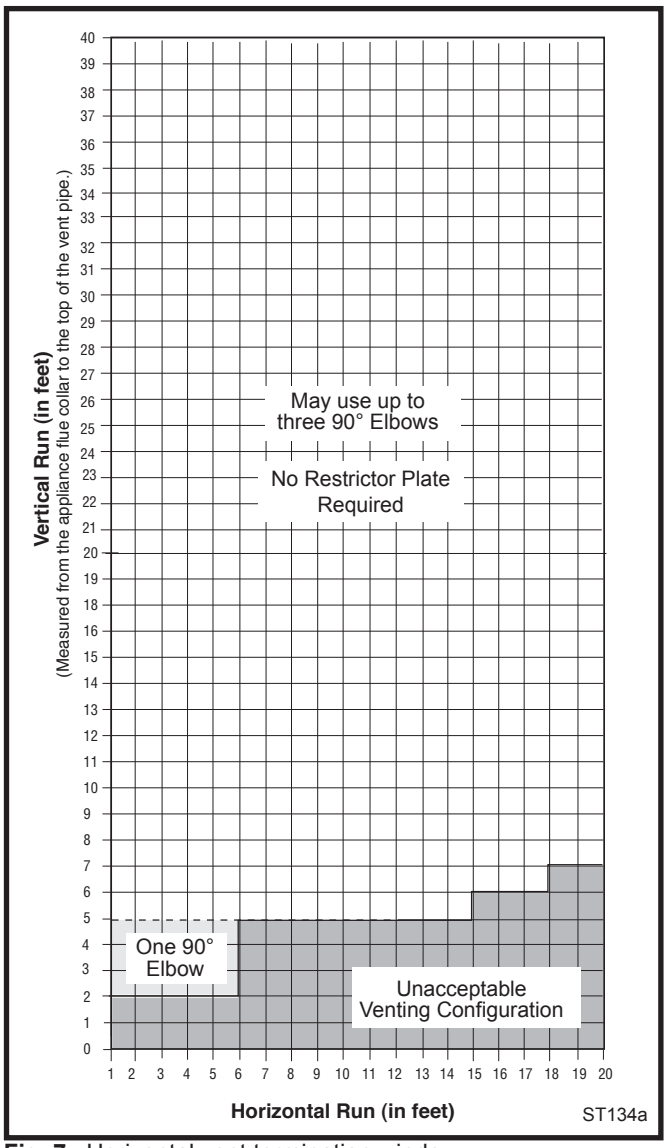

Fig. 7 Horizontal vent termination window.

Vertical Termination

A vertical vent system must terminate no less than 8' (2.44 m) and no more than 40' (12 m) above the appliance flue collar. A restrictor plate (supplied) must be used, where specified, in all vertically terminated vent systems. (Refer to Figure 8) **NOTE: The restrictor plate supplied with the vertical termination should be discarded. Adjust the restrictor plate according to recommendations in Figure 10.** A vertically terminated vent system must also conform to the following criteria:

- No more than three 90° elbows may be used.
- Two 45° elbows may be substituted for one 90° elbow. No more than six 45° elbows may be used.
- Vent must rise a minimum of 2 feet (305 mm) before offset is used.
- Termination height must conform to roof clearance as specified in Figure 11.

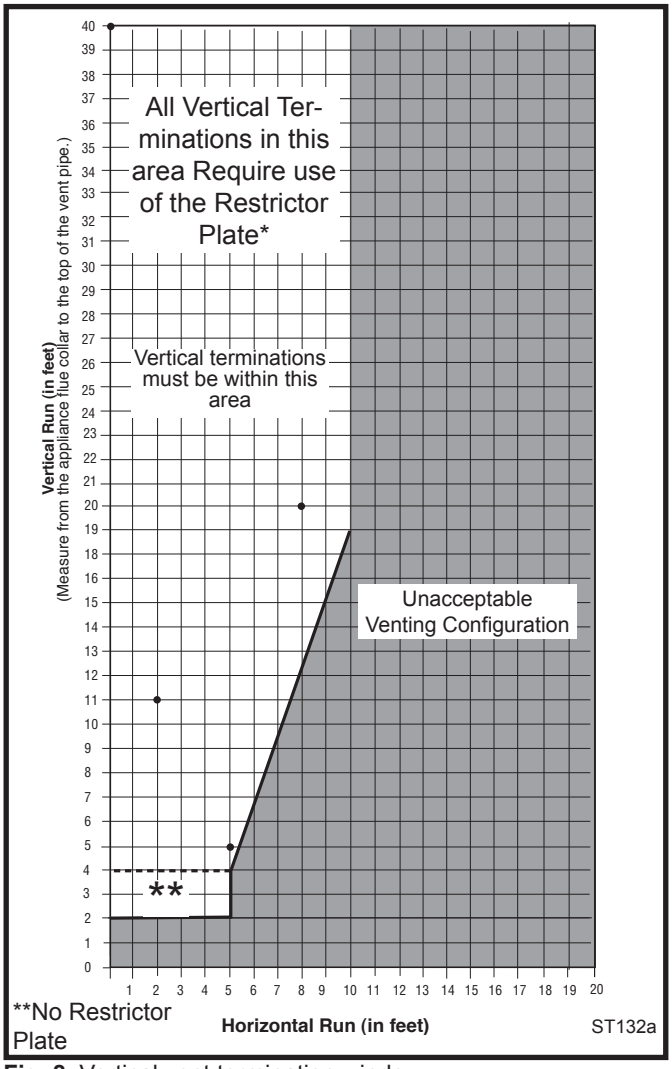

Fig. 8 Vertical vent termination window.

Restrictor Plate Adjustment for Extended Pipe Runs

The Radiance stove is shipped with a restrictor plate in the Parts Bag. Adjustments can be made by loosening the adjustment screw to allow the restrictor plate to slide up or down. (Fig. 9) A guide for usage is shown in Figure 10.

NOTE: Some installations may require some adjustment by the installer for optimum flame appearance. Optimum flame appearance is a flame that is not subject to tall, dirty yellow flames producing soot or flames lifting off of the ember bed ports.

Restrictor Plate Adjustment

1. Remove the screw in the back wall of the firebox.
2. Install restrictor plate as shown in Figure 9 with cut out on left side. Secure with adjustment screw.
2. Measure from center of screw to top edge of diverter (Fig. 9) to adjust plate according to guidelines in Figure 10.
3. Tighten attachment screw.
4. Install logs following log installation instructions.

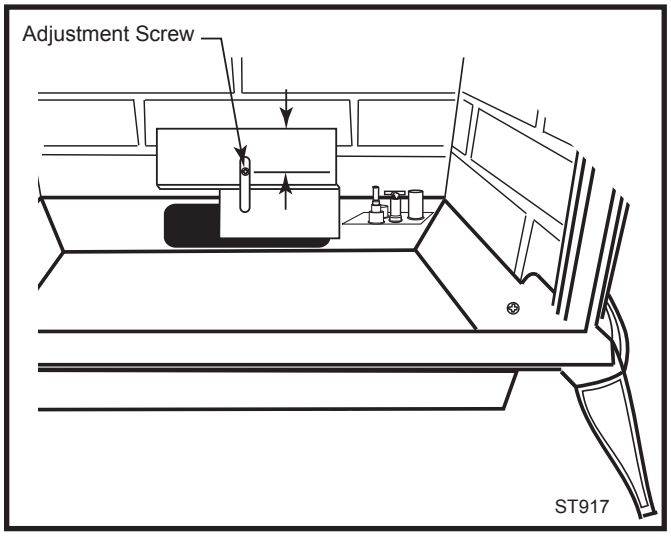

Fig. 9 Loosen screw to adjust restrictor plate.

Examples for Extended Run/Restrictor Plate Settings

1. Vertical 20' (6 m), 90° elbow, out 8' (2.4 m)
2. Vertical 11' (3.4 m), 90° elbow, out 2' (610 mm)
3. Vertical 40' (12 m)
4. Vertical 5' (1.5 m), 90° elbow, out 5' (1.5 m)

Restrictor plate measurement from top of plate to center of screw:

1. 2¾" (70 mm) from center of screw to top edge of plate
2. Plate down to top of slot
3. Plate down to top of slot
4. 2⅜" (60 mm) from center of screw to top edge of plate

Figure 10

Vent Termination Clearances

When planning the installation, consider the location of the vent terminal and clearances. Some of the most common clearances to keep in mind are shown in Figure 11.

Important: All vent clearances must be maintained. Check your vent termination clearances against Figures 11 through 13.

The vent should be placed so that people cannot be burned by accidentally touching the vent surfaces when the stove is operating.

The vent termination should be located where it cannot be damaged by such things as automobile doors, lawn mowers or snowblowers and it should be located away from areas where it could become blocked by snow, etc.

Some considerations are:

- Obstructions or impediments to venting.
- Nearby combustible materials that could come into contact with combustion exhaust gases.
- Other nearby openings {within 12” (305 mm)} through which exhaust gas could reenter the building.
- All vegetation within 3’ (76 mm) that may interfere with the draft.

Other factors that influence where the installation will be sited include the location of outside walls, where additional heat may be desired in the home, where the family members gather most regularly, and perhaps most importantly, the distance limitations of the venting system.

IMPORTANT

- The horizontal termination must not be recessed into the exterior wall or siding.
- Horizontal vent runs must be level toward the vent termination.
- Clearances around the vent termination must be maintained.
- For installations using Simpson DuraVent pipe, parallel installations with minimum wall clearance have restricted access for connecting the Horizontal Vent Cap straps to the vent pipe. See the maker’s instructions for recommended installation procedures.

Your stove is approved to be vented either through the side wall, or vertical through the roof.

- **MHSC does not require any opening for inspection of vent pipe.**
- **Only MHSC, Simpson DuraVent and Selkirk Corporation venting components specifically approved and labelled for this stove may be used.**
- **Minimum clearances between vent pipes and combustible materials is one (1”) inch (25 mm), except where stated otherwise.**
- Venting terminals shall not be recessed into a wall or siding.
- Horizontal venting must be installed on a level plane without an inclining or declining slope.

There must not be <u>any</u> obstruction such as bushes, garden sheds, fences, decks or utility buildings within 24” from the front of the termination hood.

Do not locate termination hood where excessive snow or ice build up may occur. Be sure to check vent termination area after snow falls, and clear to prevent accidental blockage of venting system. When using snow blowers, make sure snow is not directed towards vent termination area.

Location of Vent Termination

It is imperative the vent termination be located observing the minimum clearances as shown on this page.

General Venting Information - Termination Location

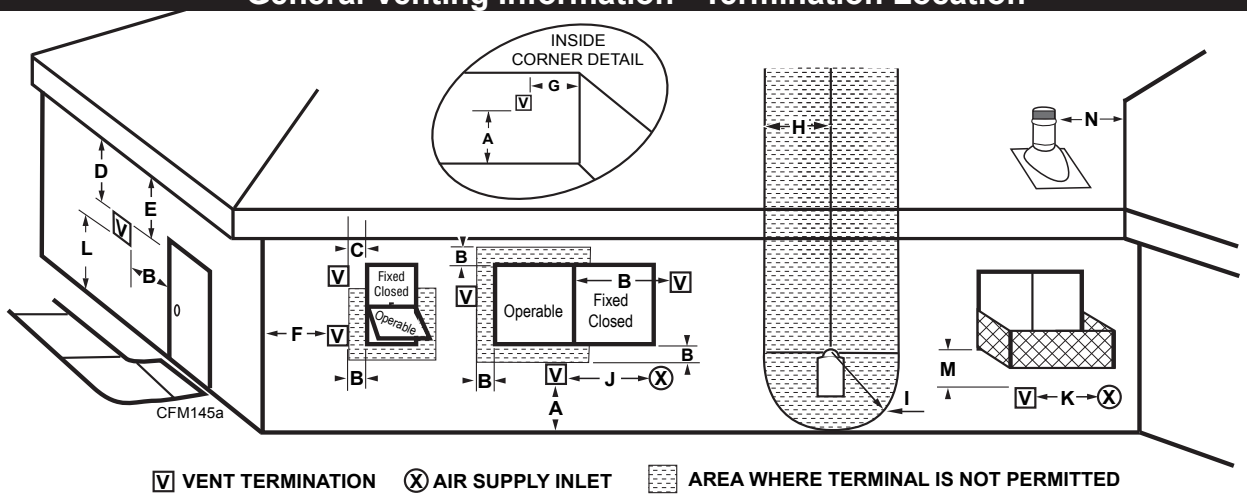

V VENT TERMINATION X AIR SUPPLY INLET AREA WHERE TERMINAL IS NOT PERMITTED

	Canadian Installations[1]	US Installations[2]
A = Clearance above grade, veranda, porch, deck, or balcony	12” (30 cm)	12” (30 cm)
B = Clearance to window or door that may be opened	6” (15 cm) for appliances < 10,000Btuh (3kW), 12” (30 cm) for appliances > 10,000 Btuh (3kW) and < 100,000 Btuh (30kW), 36” (91 cm) for appliances > 100,000 Btuh (30kW)	6” (15 cm) for appliances < 10,000 Btuh (3kW), 9” (23 cm) for appliances > 10,000 Btuh (3kW) and < 50,000 Btuh (15kW), 12” (30 cm) for appliances > 50,000 Btuh (15kW)
C = Clearance to permanently closed window	12” (305 mm) recommended to prevent window condensation	12” (305 mm) recommended to prevent window condensation
D = Vertical clearance to ventilated soffit located above the terminal within a horizontal distance of 2’ (610mm) from the center line of the terminal	18” (458 mm)	18” (458 mm)
E = Clearance to unventilated soffit	12” (305 mm)	12” (305 mm)
F = Clearance to outside corner	see next page	see next page
G = Clearance to inside corner (see next page)	see next page	see next page
H = Clearance to each inside of center line extended above meter/regulator assembly	3’ (91 cm) within a height of 15’ (5 m) above the meter/regulator assembly	3’ (91 cm) within a height of 15’ (5 m) above the meter/regulator assy
I = Clearance to service regulator vent outlet	3’ (91 cm)	3’ (91 cm)
J = Clearance to nonmechanical air supply inlet to building or the combustion air inlet to any other appliances	6” (15 cm) for appliances < 10,000 Btuh (3kW), 12” (30 cm) for appliances > 10,000 Btuh (3kW) and < 100,000 Btuh (30kW), 36” (91 cm) for appliances > 100,000 Btuh (30kW)	6” (15 cm) for appliances < 10,000 Btuh (3kW), 9” (23 cm) for appliances > 10,000 Btuh (3kW) and < 50,000 Btuh (15kW), 12” (30 cm) for appliances > 50,000 Btuh (15kW)
K = Clearance to a mechanical air supply inlet	6’ (1.83 m)	3’ (91 cm) above if within 10’ (3 m) horizontally
L = Clearance above paved sidewalk or paved driveway located on public property	7’ (2.13 m)†	7’ (2.13 m)†
M = Clearance under veranda, porch, deck or balcony	12” (30 cm)**	12” (30 cm)**
N = Clearance to any other obstruction within a horizontal distance of 18” (450 mm).		

1 In accordance with the current CSA-B149 Installation Codes
2 In accordance with the current ANSI Z223.1/NFPA 54 National Fuel Gas Codes
† A vent shall not terminate directly above a sidewalk or paved driveway which is located between two single family dwellings and serves both dwellings
** only permitted if veranda, porch, deck or balcony is fully open on a minimum 2 sides beneath the floor:

NOTE: 1. Local codes or regulations may require different clearances.
2. The special venting system used on Direct Vent Stoves are certified as part of the appliance, with clearances tested and approved by the listing agency.
3. MHSC assumes no responsibility for the improper performance of the appliance when the venting system does not meet these requirements.

Fig. 11 Vent termination clearances.

Termination Clearances

Termination clearances for buildings with combustible and noncombustible exteriors.

Inside Corner

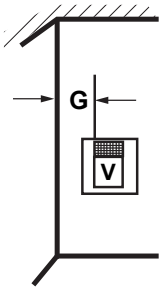

G =
Combustible
6" (152 mm)

Noncombustible
2" (51 mm)

Outside Corner

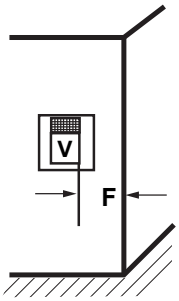

F =
Combustible
6" (152 mm)

Noncombustible
2" (51 mm)

Alcove Applications*

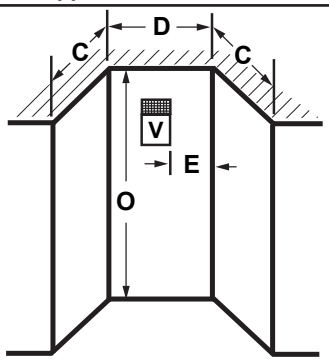

E = Min. 6” (152 mm) for non-vinyl sidewalls
Min. 12” (305 mm) for vinyl sidewalls
O = 8’ (2.4 m) Min.

No. of Caps	$D_{Min.}$	$C_{Max.}$
1	3’ (914 mm)	2 x D_{Actual}
2	6’ (1.8 m)	1 x D_{Actual}
3	9’ (2.7 m)	2/3 x D_{Actual}
4	12’ (3.7 m)	1/2 x D_{Actual}

$D_{Min.}$ = # of Termination caps x 3
$C_{Max.}$ = (2 / # termination caps) x D_{Actual}

Balcony - with no side wall

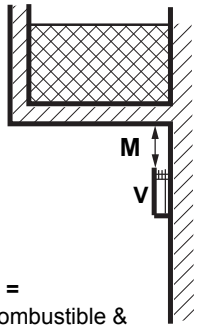

M =
Combustible &
Noncombustible
12" (305 mm)

Balcony - with perpendicular side wall

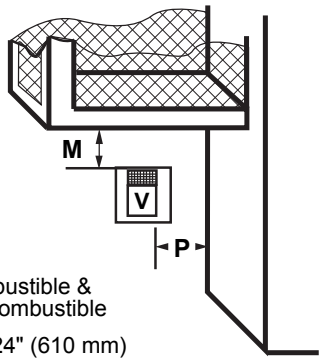

Combustible &
Noncombustible

M = 24" (610 mm)
P = 20” (508 mm)

584-15

***NOTE:** Termination in an alcove space (spaces open only on one side and with an overhang) is permitted with the dimensions specified for vinyl or non-vinyl siding and soffits. 1. There must be a 3’ (914 mm) minimum between termination caps. 2. All mechanical air intakes within 10’ (1 m) of a termination cap must be a minimum of 3’ (914 mm) below the termination cap. 3. All gravity air intakes within 3’ (914 mm) of a termination cap must be a minimum of 1’ (305 mm) below the termination cap.

Fig. 12 Termination clearances.

Venting Requirements and Options

Approved Vent System Components

The Radiance Heater must be vented to the outdoors through an adjacent exterior wall or through the roof. The venting system must be comprised of the appropriate listed venting components specified on this page. These parts are available from DuraVent Corporation, Selkirk Corporation or your Vermont Castings Dealer.

See Figure 4 for dimensions relevant to the standard minimum-vent kits.

Simpson DuraVent Components

www.duravent.com

Phone: 1-800-835-4429, Fax: 1-707-446-4740

Minimum Horizontal Vent Kit	**2792**
Starter Pipe Assembly (incl. inner & outer sections)	2768*
90° Elbow, Blk.	46DVA-E90B*
45° Elbow, Gal.	46DVA-E45
6” Straight, Blk.	46DVA-06B*
9” Straight, Blk.	46DVA-09B
11” - 14⅝” Adjustable Straight Section	46DVA-08AB
12” Straight	46DVA-12
24” Straight	46DVA-24B*
36” Straight	46DVA-36B
48” Straight	46DVA-48
Horizontal Vent Cap	46DVA-HC*
Wall Plate	46DVA-DC
Vinyl Siding Shield	46DVA-VSS
Snorkel Termination - 14”	46DVA-SNK14
Snorkel Termination - 36”	46DVA-SNK30
Wall Strap	46DVA-WS
Cathedral Ceiling Support Box	46DVA-CS
Storm Collar	46DVA-SC
Firestop Spacer	46DVA-FS
Flashing 0/12 - 6/12	46DVA-F6
Flashing 6/12 - 12/12	46DVA-F12
Steel Chimney Conversion Kit	
Kit A (6⅝” - 8⅝”)	46DVA-KCA
Kit B (6⅝” - 10½”)	46DVA-KCB
Kit C (6⅝” - 13”)	46DVA-KCC
Masonry Chimney Conversion Kit	46DVA-KMC
Vertical Termination Cap (High Wind)	46DVA-VCH
Vertical Termination Cap (Low Profile)	46DVA-VC

*Included in Minimum Horizontal Vent Kit #2792

All DuraVent Straight vent pipe sections have a net length 1½” (37mm) less than the nominal dimension; i.e., a 6” (152mm) Straight pipe section has an effective length of 4½” (115mm).

Selkirk Corporation Vent Components

www.selkirkcorp.com

1301 W. President George Bush Highway Ste. 330
Richardson, TX 75080

Phone: 1-800-992-8368, Fax: 1-877-393-4145

Appliance Adapter	4DT-AAV
90° Elbow, Blk.	4DT-EL90B
45° Elbow, Blk.	4DT-EL45B
6” Straight, Blk.	4DT-06B
9” Straight, Blk.	4DT-09B
4” - 10” Adjustable Straight Section, Blk.	4DT-AJ12
12” Straight, Blk.	4DT-12B
18” Straight, Blk.	4DT-18B
24” Straight, Blk.	4DT-24B
36” Straight, Blk.	4DT-36B
48” Straight, Blk.	4DT-48B
Horizontal Vent Cap	4DT-HC
Wall Plate	4DT-WT
Vinyl Siding Shield	4DT-VS
Snorkel Termination - 14”	4DT-ST14
Snorkel Termination - 36”	4DT-ST36
Wall Strap	4DT-WS/B
Cathedral Ceiling Support Box	4DT-CCS
Storm Collar	4DT-SC
Firestop Spacer	4DT-FS
Flashing 0/12 - 6/12	4DT-AF6
Flashing 6/12 - 12/12	4DT-AF12
Steel Chimney	
Horizontal Kit A	4DT-HKA
Horizontal Kit B	4DT-HKB
Vertical Kit	4DT-VKC
Masonry Chimney Kit	4DT-MCK
Vertical Termination Cap	4DT-VC

MHSC Vent Components

The following kits are available to meet the needs of most installations. All pipe has a 7” outer diameter and includes a 4” diameter inner section. A (CG) designation indicates the part is finished in Charcoal Gray paint. Consult your dealer about other vent parts that may be appropriate to complete the installation.

Min. Through the Wall Vent Kit **7TFSSK**
(1) 90-Degree Elbow (CG) (7537517)
(1) 24” Straight pipe (CG) (20001448)
(1) 24” - 42” Adjustable Straight Pipe (20006759)
(1) Side Wall Termination (06508)
(1) Firestop (50534)
(1) Zero-clearance sleeve (54623)
(1) Hardware package (20000160)
(1) Finishing plate (CG) (10000257)
(1) Finishing collar (CG) (56298)
(4) Charcoal Gray flue pipe rings (10001008)

Starter Kit for Below-Grade Termination **7TDVSKS**
(1) Snorkel Termination (7TDVSNORK)

Vertical Termination Kit, 1/12-6/12 Pitch **7TDVSKVA**
(1) Combination Horizontal Offset / Roof Support
(1) Vertical Termination
(1) Storm Collar
(1) 1/12-6/12 Flashing
(1) Finishing Plate (CG)
(1) Finishing Collar (CG)
(1) Polished Brass Flue Pipe Ring
(1) Hardware Package

Vertical Termination Kit, 7/12-12/12 Pitch **7TDVSKVB**
(1) 7/12 - 12/12 Flashing
and all of the other Vertical Termination parts.

Vertical Termination, Flat Roof **7DVSKVF**
(1) Flat Flashing
and all of the other Vertical Termination parts.

Twist Lock 12” Straight Pipe (CG) **7TFSDVP12**
(1) 12” Non-adjustable Pipe

Twist Lock 12” - 18” Adjustable Pipe **7TFSDVP1218**
(1) 12” - 18” Adjustable Pipe

Twist Lock 24” Straight Pipe (CG) **7TFSDVP24**
(1) 24” Non-adjustable Pipe

Twist Lock 48” Straight Pipe (CG) **7TFSDVP48**
(1) 48” Nonadjustable Pipe

Twist Lock 45-Degree Elbow (CG) **7TFSDVT45**
for vertical offsets
(1) 45-degree Elbow

Combination Offset/Roof Support **7DVCS**

Attic Insulation Shield **7DVAIS**

7” Charcoal Gray Pipe Rings, (4) **7FSDRG**

7” Polished Brass Pipe Rings (4) **7FSDRP**

Wall Thimble **942G**

Assembly Procedures

WARNING

Failure to position the parts in accordance with these diagrams or failure to use only parts specifically approved for use with this heater may result in property damage or personal injury.

This heater and components are heavy. Have help available for assembly.

Tools Required

- Phillips screwdriver (stub)
- power drill
- utility knife
- reciprocating saw
- metal drill bit: size 28 (.140”/3.5mm)
- 9/16” wrench

Parts Bag Contents:

- (3) Vent Screws
- (2) Switch bracket screws
- Wood handle w/insert lifter (handle for operable door)
- Restrictor Plate
- 4” Starter pipe
- On-Off switch, housing, and wiring harness (3) Phillips round-head bolts, 1/4”- 20 x 1/2”
- (1) Tube of Vent Gasket Cement
- (4) CS, Hex Hd 3/8-16 x 1 Gr 2-Z
- (4) Washer, Fl 3/8-Z
- Owner Registration Card
- Homeowner’s Installation and Operating Manual

Unpack and Assemble Legs

The Radiance is shipped upright. Cut the shipping straps before beginning assembly.

1. Slide stove to the rear of the pallet just far enough to access rear leg holes. Make sure the stove does not tip over backwards. (Fig. 13)
2. Attach the rear legs using 3/8” hex head bolts and flat washer supplied. Tighten with a 9/16” wrench or socket.
3. Carefully tip the stove onto its rear legs. Adjust the pallet to allow access to one of the front leg holes. Be sure to leave the pallet under the stove to prevent the stove from falling fully forward. (Fig. 14)

CAUTION: To prevent valve tubing from being crushed or damaged, do not rest valve or ignitor on wooden pallet.

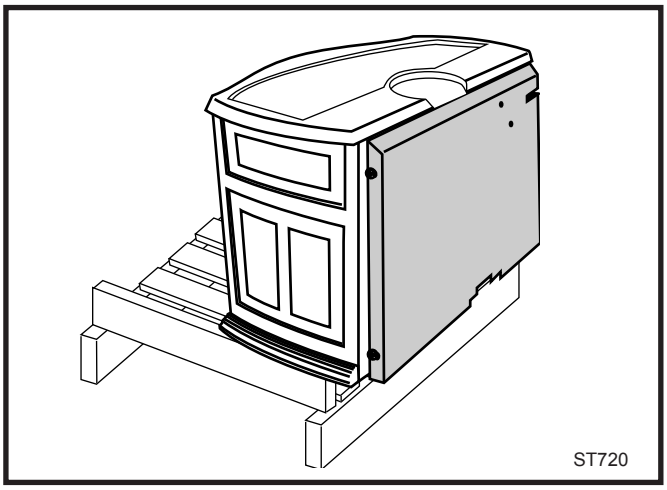

Fig. 13 Slide stove back just far enough to access rear leg holes.

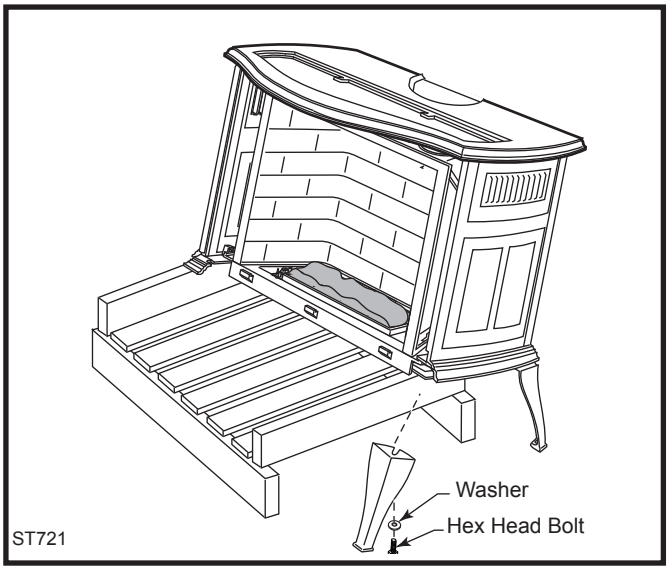

Fig. 14 Carefully tip stove onto back legs. Leave pallet under stove to keep stove from falling fully forward.

4. Have your assistant attach one leg using the hardware described.
5. Move the pallet to allow access to the other front leg hole. Attach remaining leg.
6. Remove pallet and allow stove to gently rest on all four legs.
7. Adjust leg levelers to compensate for irregularities in the hearth.

NOTE: Verify the two relief doors (located on top of the firebox) are properly seated on the gasket. The doors should sit flush on the gasket, and should lift easily from the seal around the opening.

WARNING

This appliance is equipped with a three-prong (grounded) plug for your protection against shock hazard and should be plugged directly into a properly grounded three-prong receptacle. Do not cut or remove the grounding prong from this plug.

Install the Optional Fan - RADVT Series

If you are installing the optional convection Fan Kit #2767 (FK26), continue here. It is easiest to install fan kit before connecting gas line. If you are not installing a Fan Kit, go to Page 17, Venting System Assembly.

1. The fan kit includes a Blower Assembly and a Rheostat Assembly, connected by a cable. (Fig. 15) The Blower Assembly mounts to the bottom rear of the stove, and the Rheostat mounts to the valve cover-plate. The assembly includes a 'snapstat' which automatically turns the fan On (or Off) above (or below) approximately 109°. The Rheostat also provides a range of fan speed settings from Off (which overrides the snapstat function) to High. Unpack and inspect the Blower assembly. Confirm that the fan spins freely.

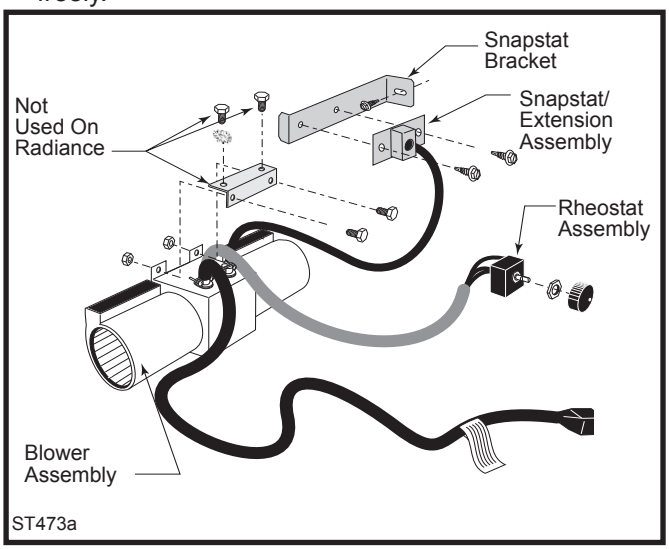

Fig. 15 Fan kit components.

2. Remove the rear shroud panel (Fig. 17) and fasten the blower assembly to the firebox back with the two bolts provided. (Fig. 17)
3. Attach the snapstat assembly to the snapstat bracket with two sheet-metal screws. Attach the snapstat bracket to the side shield. (Fig. 17)
4. The rheostat control switch attaches to the left side of the valve bracket at the front of the stove. (Fig. 18)
   - Remove retaining nut from shaft of rheostat. (if preinstalled)

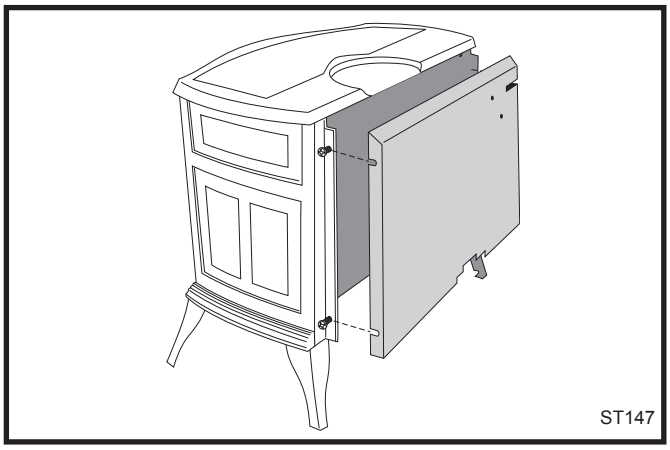

Fig. 16 Remove rear shroud.

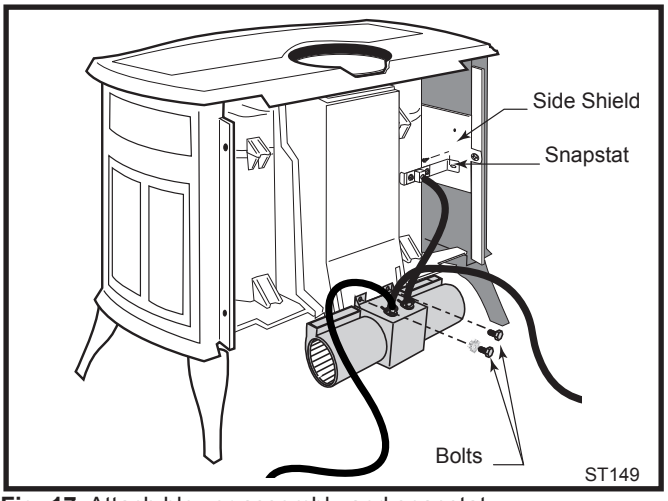

Fig. 17 Attach blower assembly and snapstat.

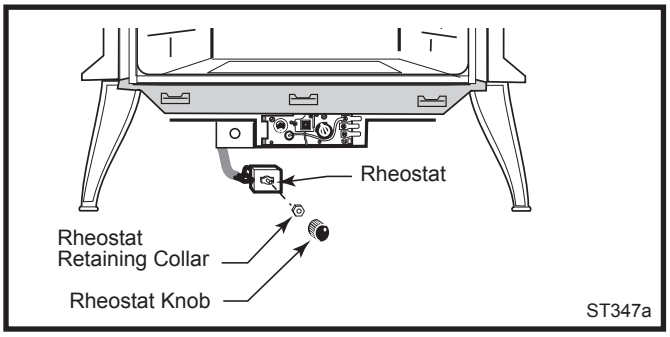

Fig. 18 Attach the fan rheostat.

- Insert the rheostat through the hole in the back of the left side of the valve bracket, aligning the locator pin with the smaller hole in that bracket.
- Thread the retaining nut onto the shaft of the rheostat, tightening with a wrench. Do not over-tighten.
- Attach the control knob to the rheostat shaft.
- Use the wire tie to secure the fan and rheostat wire harnesses together.

Venting System Assembly General Information

The Radiance is approved for installation only with the vent components listed on Pages 13 and 14. Follow the vent component instructions exactly.

For U.S. installations: The venting system must conform with local codes and/or the current National Fuel Gas Code, ANSI Z223.1/NFPA 54.

For Canadian installations: The venting system must conform to the current CSA B149.1 installation code.

Install the Vent Adapter Pipe

(MHSC Vent Components)

1. **Attach Inner Starter Pipe, (found in the Parts Bag), to the next section of inner pipe.**
   - Run a bead of sealant about 1/2” from the upper end of the Inner starter pipe and join the two sections together.
   - Drill three pilot holes into the Inner Starter and secure the assembly with three sheet metal screws. (Fig. 19)

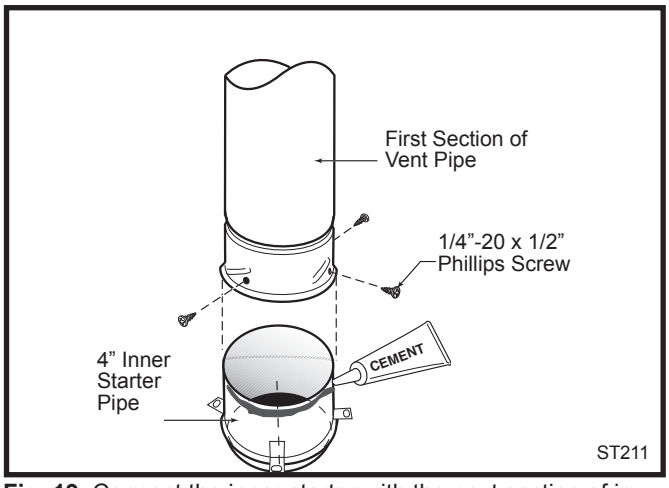

Fig. 19 Connect the inner starter with the next section of inner vent pipe.

2. **Dry fit the Inner Pipe assembly to the stove for the purpose of determining the center line of the pipe on the wall.**
   - **Side Wall Terminations:** Dry fit the outer elbow with the vertical outer vent and confirm the centerline alignment with the wall thimble opening.
3. **Attach the Inner Vent Assembly to the stove.**
   - Run a bead of sealant around the bottom end of the starter pipe and attach the assembly to the stove using three 1/4-20 x 3/8” Phillips screws provided in the parts bag. (Fig. 20)

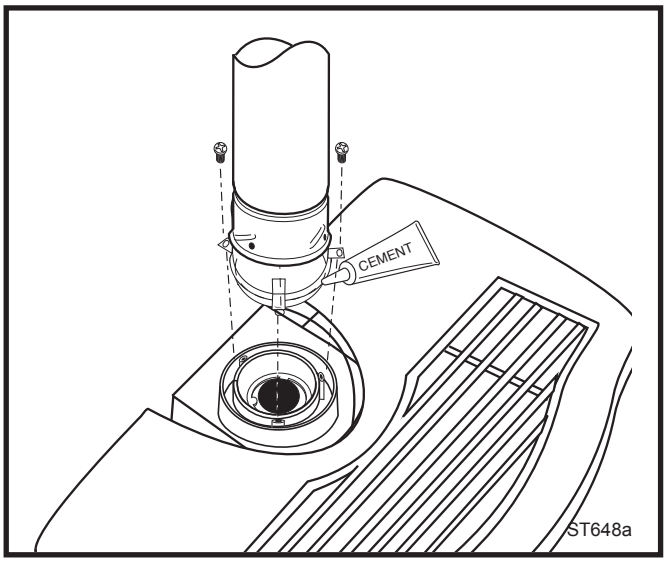

Fig. 20 Attach inner assembly to flue collar.

4. **Install the Outer Adapter Pipe.** Insert the pipe over the stove flue collar, keeping the vertical seam oriented to the back of the stove. Also, be sure to align holes on the pipe with the holes on the flue collar of the firebox. Fasten the pipe to the holes in the flue collar with the #12 x 1/2” sheet metal screws provided. (Fig. 21)

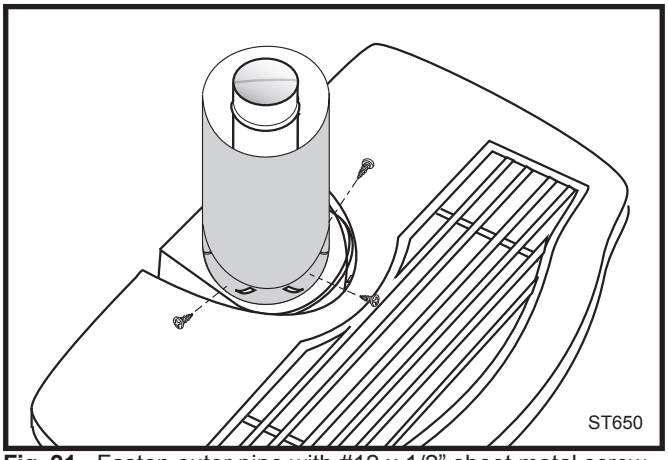

Fig. 21 Fasten outer pipe with #12 x 1/2” sheet metal screw.

Install the Vent Adapter Pipe

(Simpson Dura-Vent Components)

1. **Discard the inner starter pipe** shipped in the Parts Bag. Using the starter pipe assembly listed on Page 13, slide the inner section out to allow access.
   - Run a bead of sealant around the bottom end of the starter pipe and attach the assembly to the stove using three 1/4-20 x 3/8” Phillips screws provided in the parts bag. (Fig. 22)
2. **Install the Outer Adapter Pipe.** Orient the vertical seam to the rear, and insert the crimped end of the outer pipe into the flue collar. Fasten with three sheet metal screws provided. (Fig. 23)

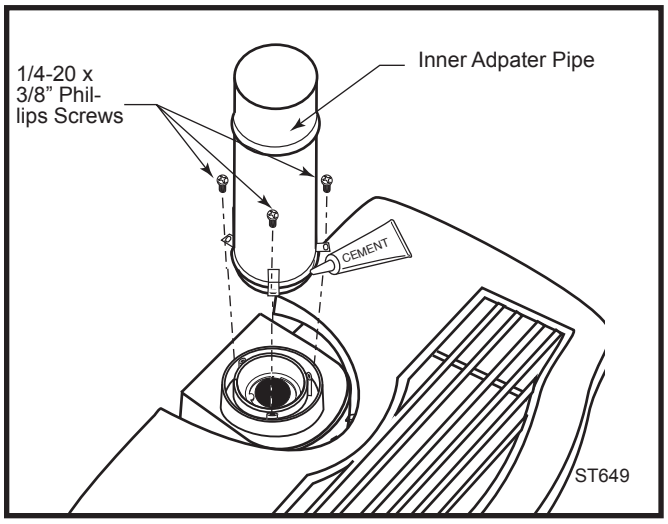

Fig. 22 Simpson DuraVent - install inner adpater pipe.

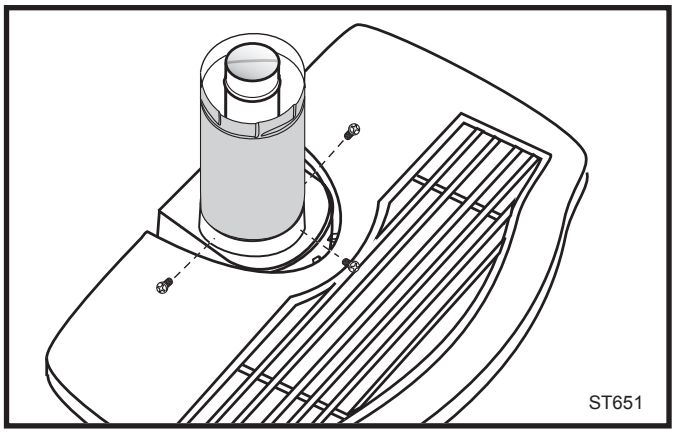

Fig. 23 Simpson Dura-Vent - install outer adapter pipe.

Install Vent Adapter Pipe

(Selkirk Corporation Vent Components)

The appliance adapter (AA) adapts DIRECT-TEMP to most direct vent appliances incorporating outlet collars configured to receive most common 4" (ID) by 6⅝" (OD) or 5" (ID) by 8" (OD) "Twist Lock" style, direct vent systems.

The adapter incorporates two indentations on the outer wall of the inlet end, which are designed to "Twist Lock" into place upon attachment to the appliance outlet. Align the adapter indentations with the entry slots of the appliance outlet and slide together. Turn the adapter clockwise approximately one-quarter turn to lock in place. The outlet end of the adapter is standard DIRECT-TEMP construction.

For connection of Direct-Temp to units with 4" x 7" flue outlets, the following methods have been approved:

- Install the Universal/Napoleon Appliance Adapter 4DT-AAN.
- Connect a standard Direct-Temp pipe length (do not use an adjustable length in this application) a minimum of 1½" over the flue outlet. The outside of the Direct-Temp Length will fit inside the flue outlet Secure with a minimum of two #8 x 1/4" sheet metal screws and seal with hi-temp silicone.

For units factory equipped with appliance adapters from other brands of Direct Vent systems, it is permissible to simply slide a length of DT pipe over the appliance adapter. Secure with a minimum of two #8 x 1/4" sheet metal screws and seal with hi-temp silicone.

Side Wall Termination Assembly

1. Locate the vent opening on the wall. Refer to Page 7, Figure 5, to determine the opening centerline. It may be necessary to first position the stove and measure to find the hole location. Depending on whether the wall is made of combustible materials, cut the opening to the size shown in Figure 24. Combustible wall openings must be framed as shown in Figure 24.

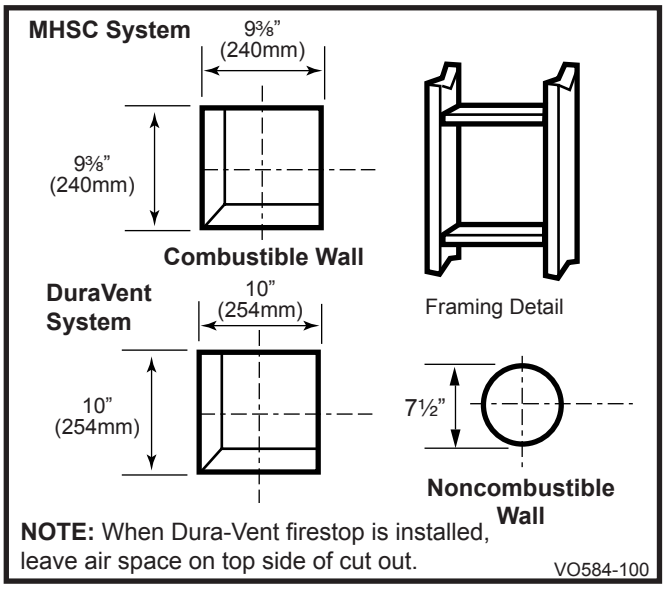

Fig. 24 Locate vent opening.

2. Measure the wall thickness and cut the wall sleeve sections to proper length (MAXIMUM 12"). Assemble the sleeve with the #8 sheet metal screws supplied. Attach the firestop plate to the sleeve end with the holes. (Fig. 25) **NOTE:** The wall sleeve is required in combustible walls only.
3. Install the Wall Firestop/Sleeve assembly into the wall cutout and fasten the firestop to the wall cutout framing members. (Fig. 25)

For DuraVent pipe only: Install vent pipe by aligning the locking system together, sliding the pipes together and twisting clockwise.

- Install 90° elbow. Twist lock as before.
- Slide the wall plate over horizontal run before attaching the horizontal run to the elbow. Fasten wall plate to wall.

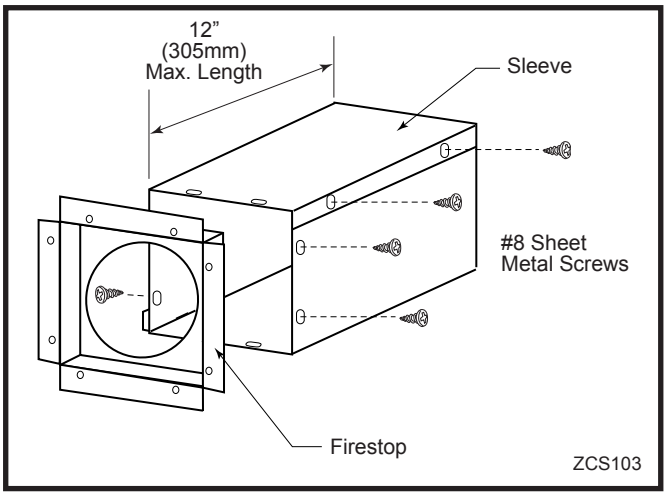

Fig. 25 Assemble the wall sleeve and firestop.

4. ***For MHSC Vent Pipe only:*** If necessary, measure to determine the vertical length (X) of pipe required from the adapter pipe to the wall cutout centerline, including a 2” overlap at the joint. (Fig. 26) use a hacksaw or tin snips to trim the pipe as needed.

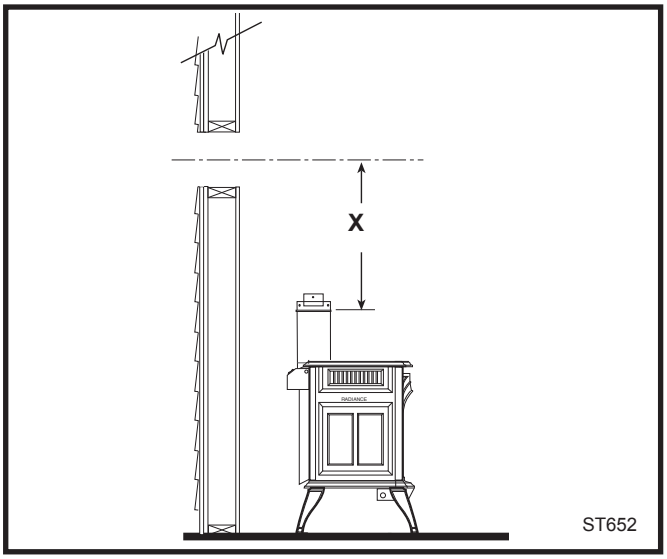

Fig. 26 Determine the vertical pipe length.

5. Install first the inner then the outer straight pipe section(s), trimmed end down, to the point of the elbow. Drill 3 holes through each joint and fasten with sheet metal screws.
6. Install the elbow using 3 sheet metal screws at each joint.
7. Measure, and cut if needed, the appropriate length of pipe section needed to make the connection through the wall. Include a 2” overlap; i.e. from the elbow to the outside wall face, about 2” or the distance required if installing a second 90° elbow. (Fig. 27)
8. Slip the wall plate and trim collar over the interior end of the horizontal pipe and install into the wall sleeve. Seal the joint inside the wall plate if needed to keep cold air from being drawn into the home.

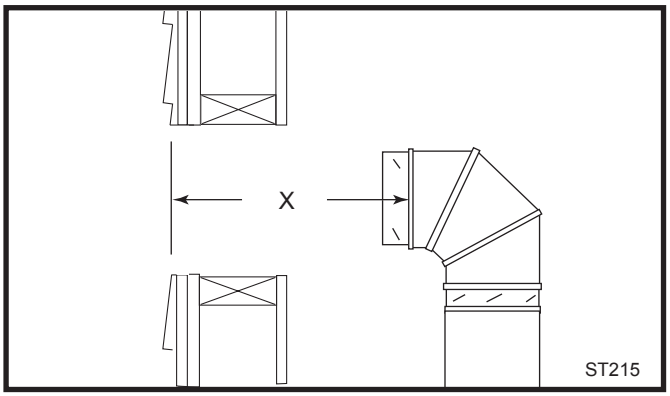

Fig. 27 Measure the horizontal length.

9. Connect the horizontal pipe to the elbow. Fasten the wall plate to the pipe with three sheet metal screws. Slide the trim collar up against the wall plate to cover the screws. (Fig. 28)
10. ***For both MHSC and DuraVent Systems:*** Install the vent terminal. (Fig. 29) Apply high temperature sealant one inch from the ends of the inner and outer collars. Guide the inner and outer vent termination collars into the adjacent pipes. Double check that the vent pipes overlap the collars by 2”. Fasten the termination to the wall with the screws provided, and caulk the joint with weatherproof sealant.

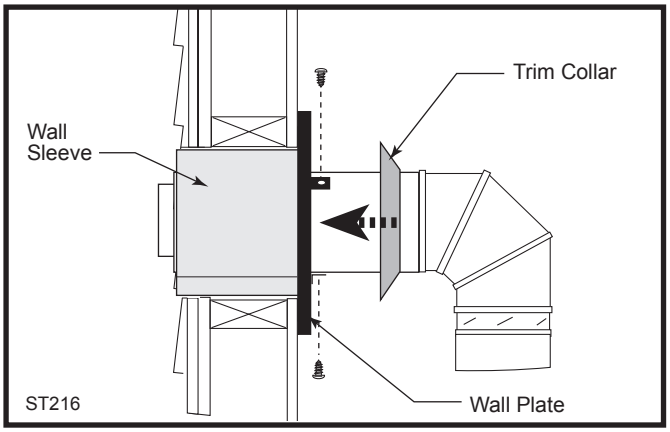

Fig. 28 Install the horizontal pipe and wall plate parts.

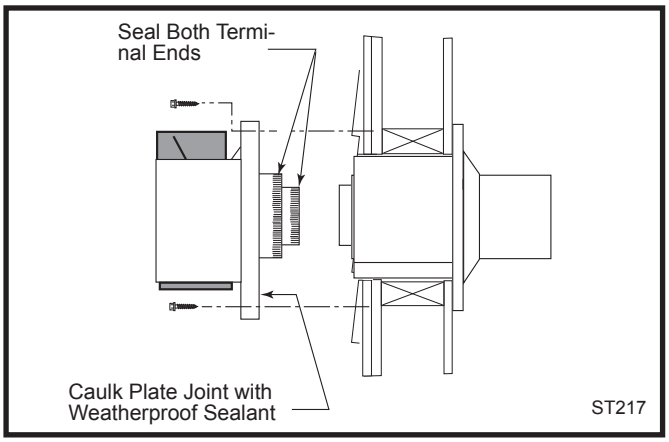

Fig. 29 Install the vent terminal.

11. For MHSC only: Install Charcoal Gray Pipe Rings (#7FSDRG) or Polished Brass Pipe Rings (#7FSDRP) at pipe joints, if desired.

Vent Termination Below Grade

Install Snorkel Kit #7FSDVSKS when it is not possible to meet the required vent termination clearances of 12” (305 mm) above grade level. The snorkel kit will allow installation depth of down to 7” (178 mm) below grade level. The seven inches is measured from the center of the horizontal vent pipe as it penetrates the wall. **If the venting system is installed below grade, a window well must be installed with adequate and proper drainage.** (Fig. 31)

NOTE: Be sure to maintain side wall clearances and vent run restrictions. Refer to Page 7, Figures 3, 4, 5, 6.

1. Establish the vent hole through the wall.
2. Remove soil to a depth of approximately 16” (406 mm) below the base of the snorkel. Install a window well (not supplied). Refill the hole with 12” (305 mm) of coarse gravel and maintain a clearance of at least 4” (102 mm) below the snorkel. (Fig. 31)
3. Install the vent system as described on Pages 16-18.
4. Be sure to make a watertight joint around the vent pipe joint at the inside and outside wall joints.
5. Apply high temperature sealant around the inner and outer snorkel collars. Join the pipes and fasten the snorkel termination to the wall with the screws provided.
6. Level the soil to maintain a 4” clearance below the snorkel.

   If the foundation is recessed, use extension brackets (not supplied) to fasten the lower portion of the snorkel. Fasten the brackets to the wall first, and then fasten to the snorkel with self-tapping #8 x 1/2” sheet metal screws. Extend the vent pipes out as far as the protruding wall face. (Fig. 31)

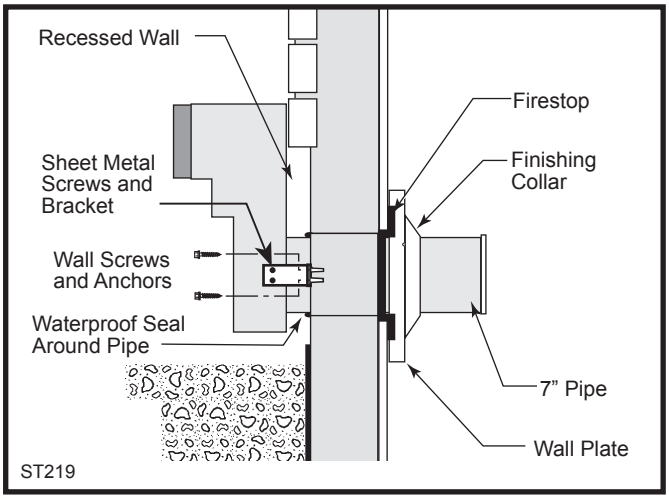

Fig. 30 Use extension brackets to mount snorkel against recessed wall.

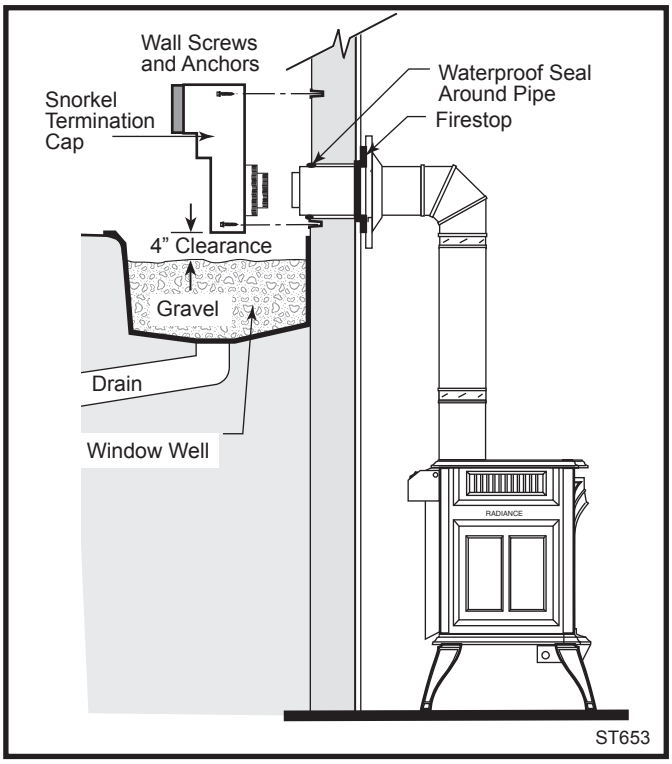

Fig. 31 Snorkel kit installation.

Vertical (Through the Roof) Vent Assembly

Make certain the vent system conforms to all other requirements for vertical termination as specified on Page 9.

This installation will require you to first determine the roof pitch and use the appropriate vent components. Refer to Figure 11 on Page 11.

1. Locate the final position of the stove, observing all clearances for both the vent and the stove.
2. Plumb to the center of the inner (4”) flue collar from the ceiling above, and mark that location.
3. **Cut the opening:**

   MHSC System: 9⅜” x 9⅜” (240 x 240 mm)

   DuraVent System: 10” x 10” (254 x 254 mm)
4. Plumb any additional opening through the roof or other construction that may be needed. In all cases, the opening must provide a minimum of 1” (25 mm) clearance to the vent pipe.
5. Place the stove in its final position.
6. Install firestop(s) #7DVFS and Attic Insulation Shield #7DVAIS as needed. (Fig. 32) If there is a room above ceiling level, a firestop must be installed on both the bottom and top sides of the ceiling joists. If an attic is above ceiling level, an attic insulation shield must be installed.

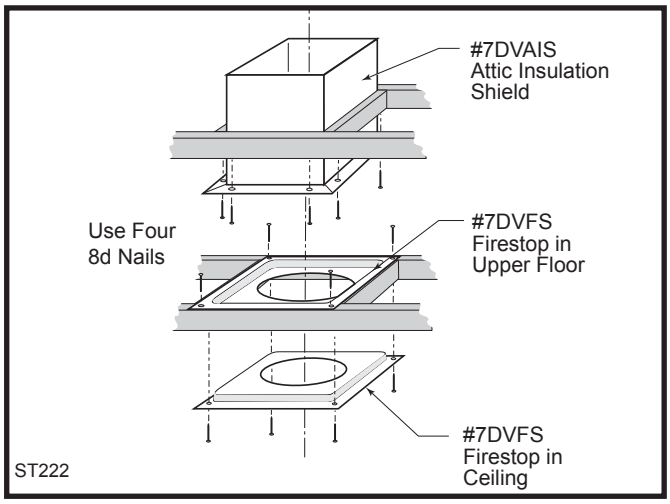

Fig. 32 Install firestops and attic insulation shield.

7. Install the appropriate roof support and flashing, making certain that the upper flange of the flashing base is below the shingles. (Fig. 33)
8. Install appropriate pipe sections until the vent run reaches above the flashing. The enlarged ends of the vent sections always face downward.
9. Install the storm collar and seal around the joints. (Fig. 33)
10. Add additional vent lengths to achieve the proper overall height.
11. Apply cement to the inner and outer termination collars and install the terminal cap.

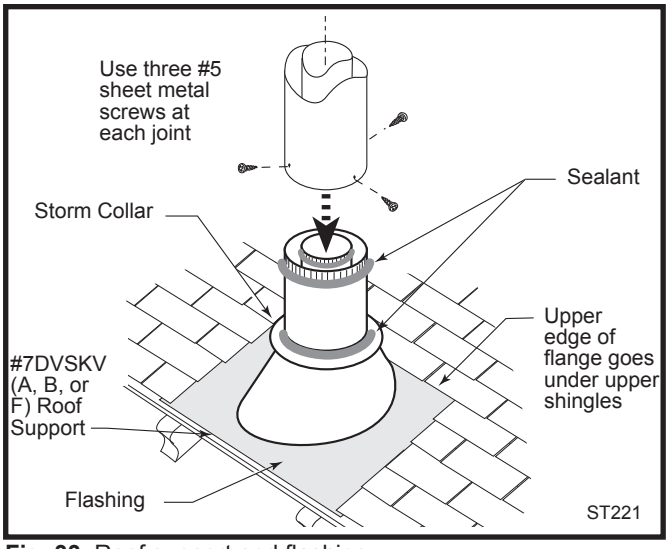

Fig. 33 Roof support and flashing.

Selkirk Direct-Temp Metalbestos Direct Vent System

Installation Instructions

1. Determine whether the length of pipe fits the appliance outlet by attempting to engage the parts. If the parts engage smoothly, proceed to Step 2. If obstructions, interference or loose fit is noted, contact the appliance manufacturer or Selkirk Metalbestos with the dimensions of the appliance outlet.
2. Slide the length of pipe over the appliance outlet a minimum of 1½” and screw to the appliance outlet collar using a minimum of two (2) #8 x 1/4” sheet metal screws.

Appliance Adapter (AAV)

The appliance adapter (AAV) adapts DIRECT-TEMP to most direct vent appliances incorporating outlet collars configured to receive most common 4” (ID) 6⅝” (OD) or 5” (ID) by 8” (OD) “Twist Lock” Style, direct vent systems.

The adapter incorporates two (2) indentations on the outer wall of the inlet end, which are designed to “Twist Lock” into place upon attachment to the appliance outlet. Align the adapter indentations with the entry slots of the appliance outlet and slide together. Turn the adapter clockwise approximately one-quarter turn to lock in place. The outlet end of the adapter is standard DIRECT-TEMP construction.

Framing Dimension Table 1

Model DT Diameter	Ceiling Support (CS) Firestop (FS)	Cathedral Ceiling Support CCS)	Wall Thimble (WT)
4”	8¼” x 8¼”	10⅝” x 10⅝”	8¼” x 8¼”
5”	10⅛” x 10⅛”	14½” x 14½”	10⅛” x 10⅛”

Use of Sealant

It is not required to apply or use sealant on the inner liner of DIRECT-TEMP. For outer wall joint sealing considerations, follow appliance manufacturer recommendations.

Joint Connection:

The pipe and elbows are assembled by inserting the outlet (male) end of a length of pipe or elbow into the inlet (female) end of an adjacent length of pipe or elbow. Make sure the outlet end is fully seated within the inlet end of the adjoining section and the gasket, located on the inner liner of the inlet section is fully enclosed by the inner liner of the outlet of the adjoining section. Push in the Lock Tab such that it becomes seated within the inward groove of the adjoining section. This locks the joint in place. (Fig. 34)

Supporting DIRECT-TEMP: Vertical Support

Vertical installations can be supported by two methods:

Ceiling Support (CS) (used in flat ceiling installation) comes with a support plate and a support collar. Install

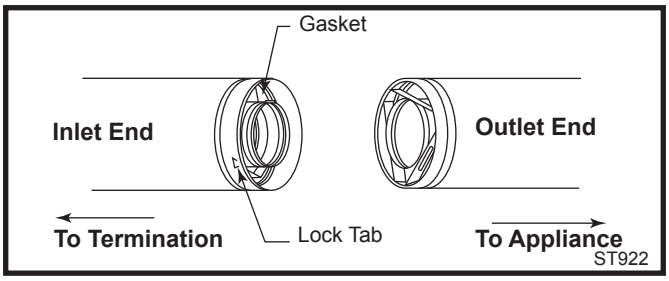

Fig. 34 Joint connection.

it by screwing the support plate to the top of the properly framed ceiling joist opening, using screws provided. A round trim plate (TP) is attached to the ceiling, using screws, to provide a finished appearance once installed. (Fig. 35)

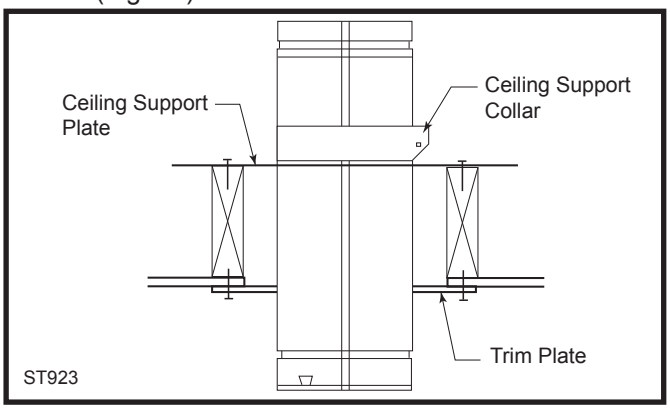

Fig. 35 Ceiling support.

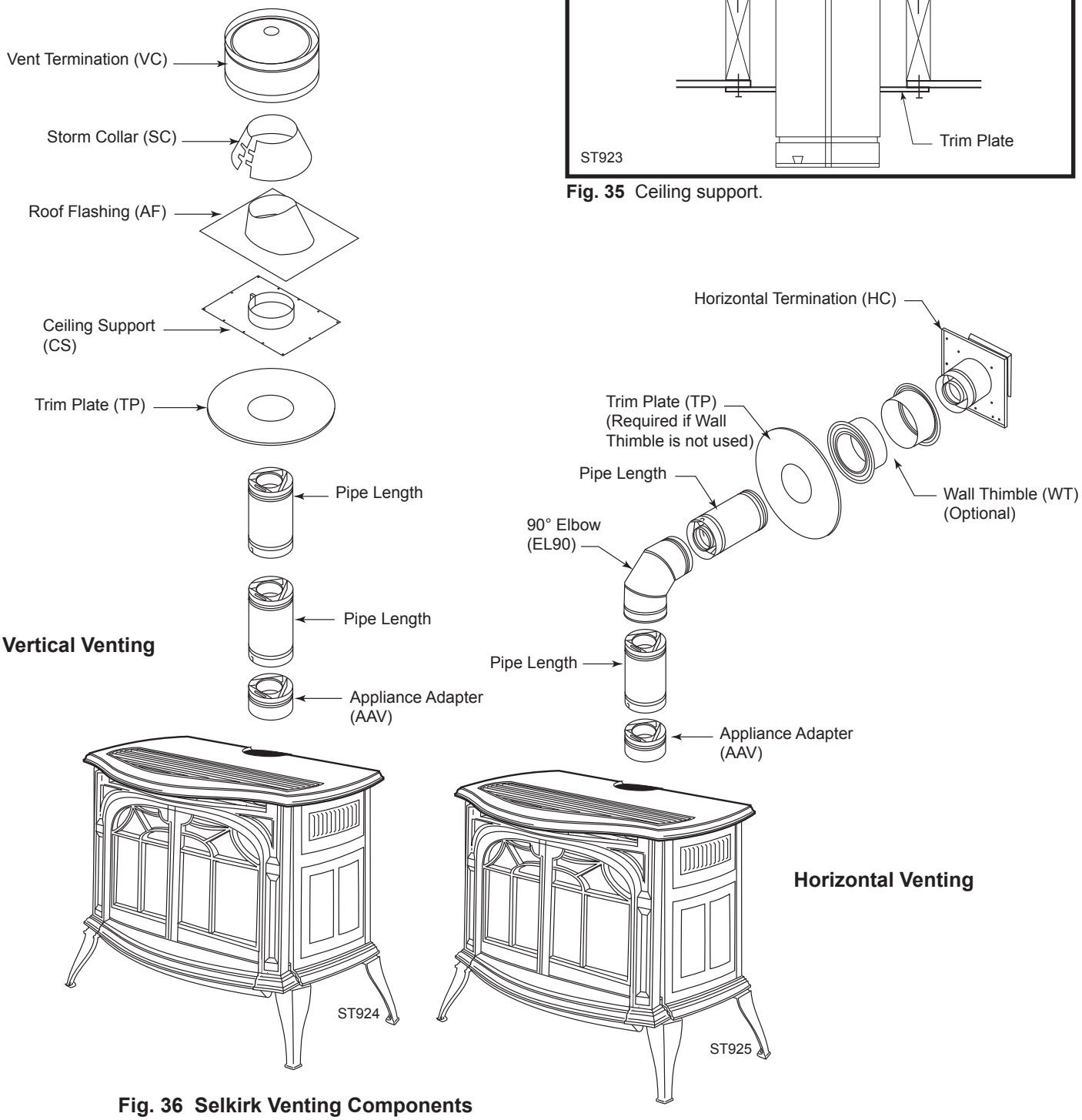

Fig. 36 Selkirk Venting Components

The Cathedral Ceiling Support (CCS) may be used in pitched or flat ceiling installations and comes with a support collar and a decorative two part square trim plate. Install by inserting the support box down through the framed joist opening (end with round hole first) in the ceiling using tin snips, cut the corners of the open end of the box such that the sides can be folded down over the top of the joist framing members. Nail the folded sides to the top of the framing. (Fig. 37)

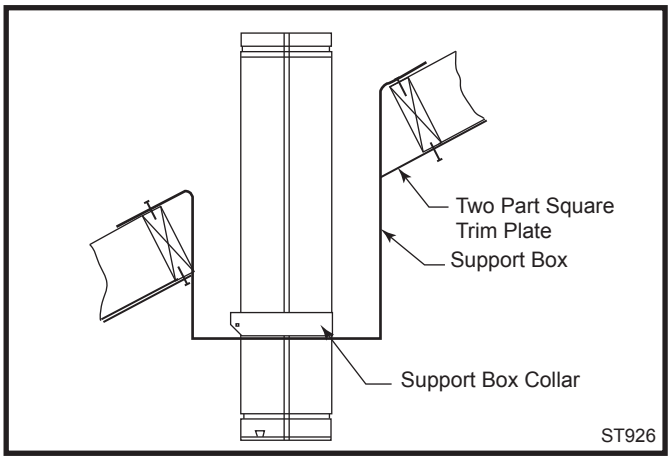

Fig. 37 Support box.

A two-part square trim plate is provided to give a finished look once installed. Simply fit the two halves of the trim plate around the cathedral ceiling support box hanging below the ceiling (overlapping if necessary) and screw them to the ceiling. Both the ceiling support and cathedral ceiling support can support a maximum of 40' (12 m) of pipe.

Offsets:

If any offsets are necessary in the vertical system, an Offset Support (OS) should be installed directly above the upper elbow of the offset. Install by attaching the offset support band to the pipe with two #8 x 1/4" sheet metal screws (minimum) and secure the offset support straps to surrounding structure. (Fig. 38)

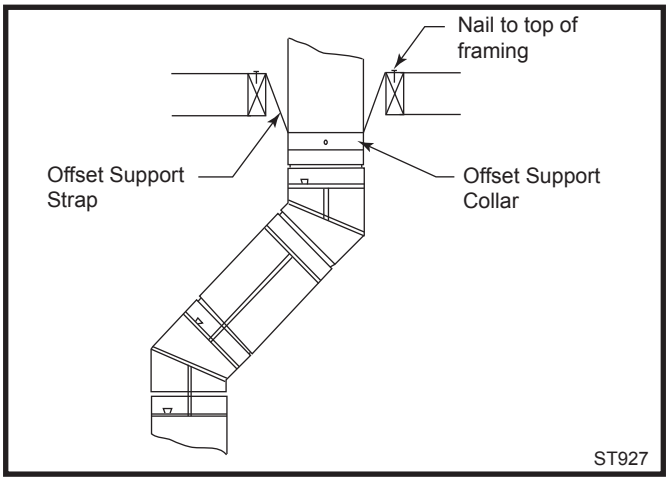

Fig. 38 Offset support.

Supporting DIRECT-TEMP: Horizontal Support

Horizontal runs of Direct-Temp should be supported every 4' (122 cm) of pipe. This can be done with the use of plumbers strapping or the offset support.

Adjustable Length (AJ)

An Adjustable Length is available to accommodate installations where non-standard lengths are necessary. The adjustable length telescopes down over a standard length of pipe and provides an extension range of 3½" (89 mm) to 10½" (267 mm). Install by sliding the inlet end of the adjustable length over the outlet end of a standard length of pipe. After positioning the adjustable length appropriately, secure it to the standard length with two (2) #8 x 1/4" sheet metal screws (provided). Seal the area between both the top and bottom of the adjustable length outer wall and the outer wall of the standard length with an approved silicone sealant.

Fire Stopping

DIRECT-TEMP must be firestopped wherever it passes through floors, ceiling or walls. The only location where a firestop is not required is at the roof level. Both vertical support components with trim plates provide for firestopping. The wall thimble also acts as a firestop. AT other locations, a firestop spacer (FS) should be installed. In the attic the firestop should be placed on top of the joist framing to prevent debris from falling into the joist framing. (Fig. 39)

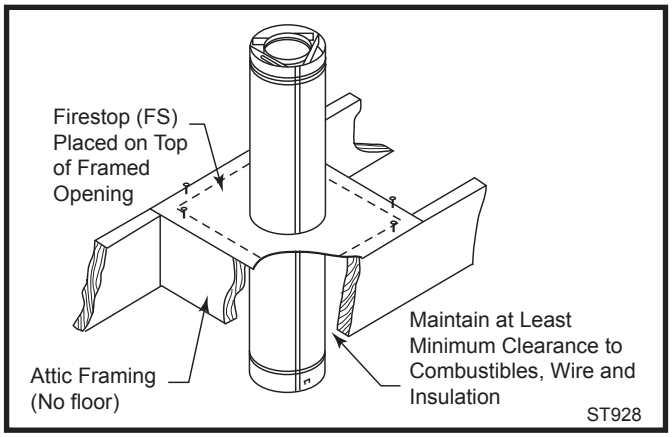

Fig. 39 Firestop spacer.

Horizontal Installation

1. Determine the appliance location. Refer to the appliance manufacturer's installation instructions for clearance to combustible requirements, termination options, number of elbows, maximum length, etc. Then position the appliance and plan vent routing accordingly. Consider locating the appliance in a place where there will be no interference with wall studs, electrical wiring, conduit, plumbing pipe or other obstructions. The termination should be located at least 12" (305 mm) (Fig. 40) above grade, remain above the snow line in geographical areas that accumulate snow and be away

from traffic areas such as walkways if it is less than 7' (2.1 m) high. Refer to Pages 11, 12, Figures 11, 12 for more detail.

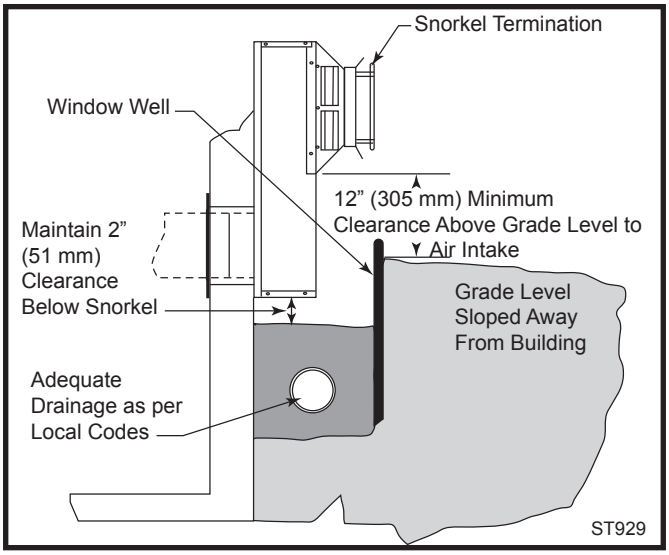

Fig. 40 Below grade installation.

2. Assemble the pipe (and elbow if using) and attach it to the appliance. Plan for a level to 1/4" per foot rise (6 mm per 305 mm) (from inlet to outlet) in the horizontal system if not specified by the appliance manufacturer. Horizontal runs should be supported every 4' (122 cm).

3. Push the appliance near the desired location. Determine the centerpoint of the penetration by locating the centerline of the outlet of the pipe with respect to the wall.

4. Frame an opening to the dimension specified in the Framing Dimension Table 1. Ensure the centerline of the pipe lines up with the center of the prepared opening unless otherwise specified by the appliance manufacturer.

NOTE: As a general rule, the wall thimble is optional in the U.S. However, there may be some manufacturers that require it. Contact the appliance manufacturer for information if uncertain. **When installed in Canada, a wall thimble is required on all installations in which the vent passes through a combustible wall.**

5. If required, install the outside half of the wall thimble (WT) through the opening and screw or nail in place. (Fig. 41) Seal around the perimeter of the thimble face plate on the exterior wall using an RTV silicone sealant to provide protection from possible rain infiltration. (Fig. 41)

NOTE: The wall thimble accommodates wall thicknesses of 4½" (114 mm) to 7½" (191 mm). If a larger range is needed due to a thicker wall, it is permissible to field fabricate a metal sleeve extension and attach it to the shields.

6. Install the horizontal termination to the exterior wall using four (4) all purpose screws through the holes located at each corner of the termination. Make sure the arrow (embossed on the front of the termination) is pointing up. (Fig. 42) If the house has vinyl siding,

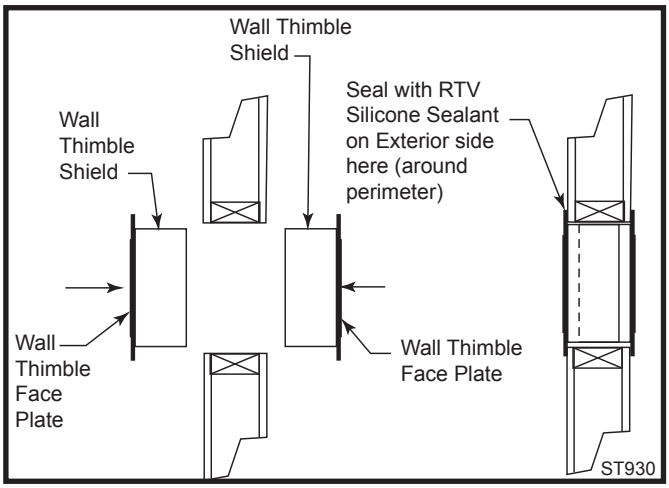

Fig. 41 Wall thimble.

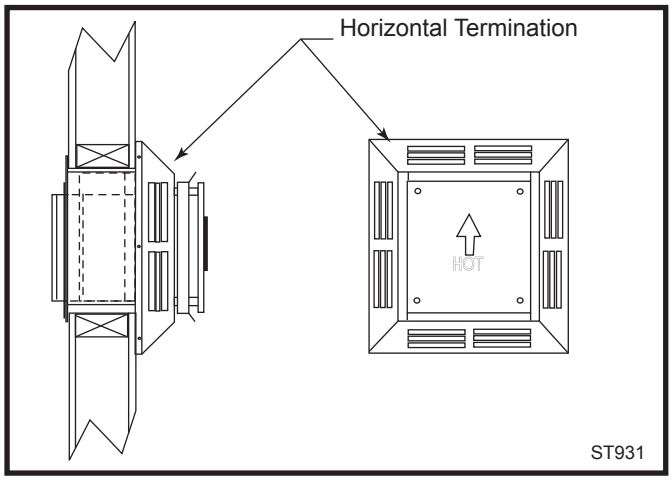

Fig. 42 Horizontal termination.

a Vinyl Siding Standoff (VS) must be installed prior to installing the horizontal termination. Refer to the appliance manufacturer to determine if one is recommended. Attach the vinyl siding standoff to the exterior side of the wall (making sure it is level and centered with respect to the opening) with screws (provided) at each corner of the standoff. Attach the horizontal termination to the standoff. (Fig. 43)

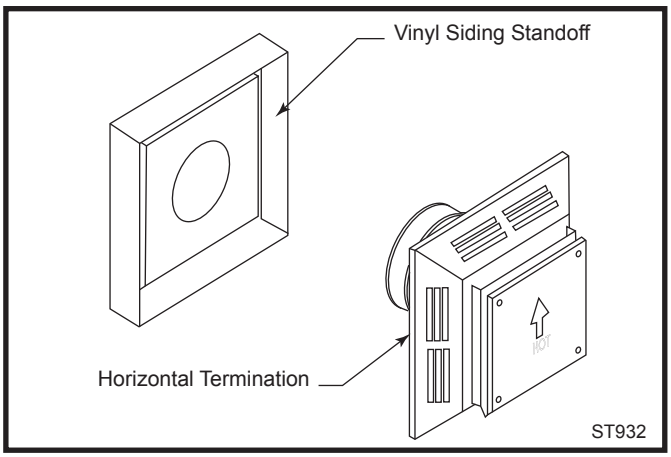

Fig. 43 Vinyl siding standoff and horizontal termination.

If the wall is brick or concrete, and contains no combustible material, a 7” (178 mm) round penetration hole is adequate. The wall thimble is not required. The perforated straps of the horizontal termination provide a method of attachment. These can either be threaded through the opening or wall thimble (if used) and screwed to the pipe or removed with a pair of tin snips if not used. Use proper masonry fasteners to attach the horizontal termination to the wall.

7. If a wall thimble is used, push the pipe (which is connected to the appliance) carefully through the wall thimble until the DIRECT-TEMP pipe becomes fully engaged with the horizontal termination. If no thimble is used, place the Trim Plate (TP) on the DIRECT-TEMP pipe. Carefully push the DIRECT-TEMP pipe through the wall until fully engaged with the horizontal termination. Secure the trim plate to the wall.

NOTE: If a vertical rise is necessary on the exterior side of the building, a 14” (356 mm) and 36” (914 mm) Snorkel Termination (ST) is available. Follow the installation procedures for horizontal terminations. If the snorkel termination is to be located below grade, a window well is recommended with adequate and proper drainage as per local codes. Leave 2” (51 mm) clearance below snorkel to prevent water from entering the snorkel termination. Do not enclose the snorkel within a wall or other type of enclosure and **do not back fill**. Ensure that grade level slopes away from the building. (Fig. 40)

Vertical Installation (Fig. 44)

1. Determine the location of the appliance. Choose a location which provides adequate clearance from obstacles such as electrical wiring, conduit, framing members, plumbing pipe, etc.

2. After positioning the appliance, determine where the vent pipe will pass through the ceiling. This can be done by using a plum bob or a small weight attached to a string. Hold the plum bob from the ceiling moving it until it lines up with the centerline of the outlet of the appliance. Mark the position on the ceiling.

NOTE: Frame openings to the dimensions specified in the framing table for the cathedral ceiling support box (CCS), the ceiling support (SC) and wherever the firestop spacer (FS) is being used.

3. Cut and frame the appropriate sized square hole through the ceiling. Repeat the process for other ceiling penetrations as necessary.

4. Determine and mark the roof penetration in the same manner.

5. Cut a hole in the roof at this point large enough to satisfy all clearance-to-combustible requirements as specified by the appliance manufacturer’s installation instructions.

6. Install the ceiling support cathedral ceiling support box assembly, as appropriate.

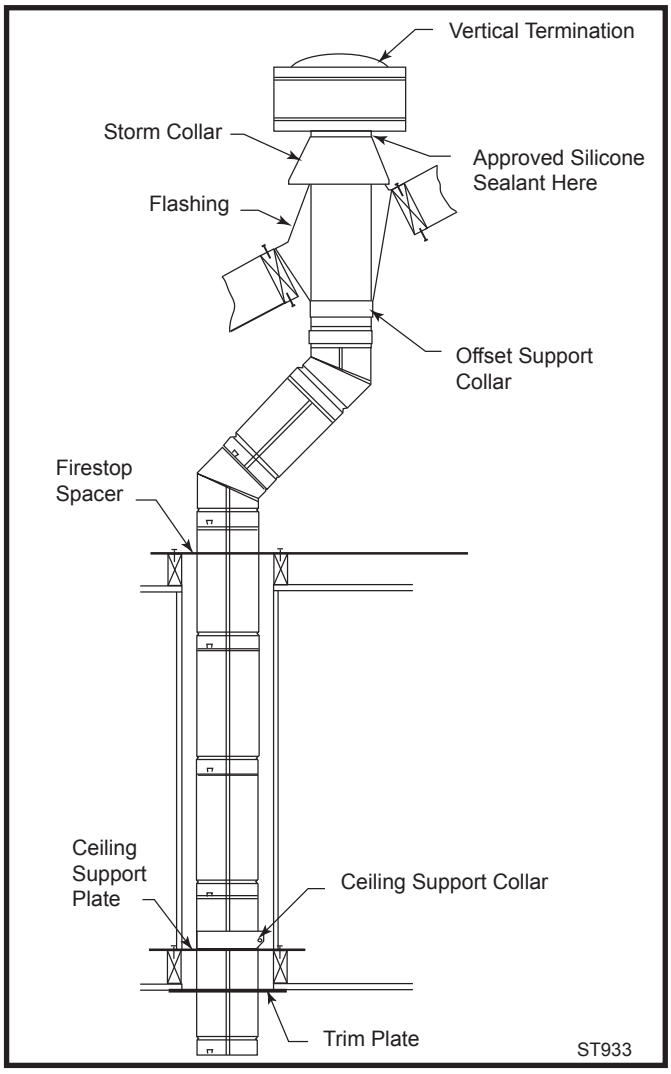

Fig. 44 Typical vertical venting configuration.

7. Determine the distance from the appliance outlet to a point just above [approximately 12” (305 mm) to 24” (610 mm)] either the cathedral ceiling support box or the ceiling support plate and assemble lengths of pipe to satisfy this distance. Do not attach assembly to appliance.

8. Loosely position the support collar around the assembled lengths (flared end down).

9. From above, lower the assembled pipe sections down through the cathedral ceiling box or ceiling support plate and attach it to the appliance adapter. The support collar should then be adjusted so that when the assembled lengths of pipe are attached to the appliance, it rests on the bottom of the cathedral ceiling support box on top of the ceiling support plate.

10. Tighten the tabs of the collar. Secure the support collar by inserting three (3) #8 x 1/4” sheet metal screws through the support collar and the outer wall of the pipe.

NOTE: If the cathedral ceiling support box assembly is being used, it may be necessary to temporarily connect

the assembled pipe to the appliance. Determine and mark the location of where the support collar will be attached to the pipe. Disconnect and remove assembled pipe. Attach the support collar per Step 10 (where marked) and reinstall assembly. This is due to limited space within the cathedral ceiling support box. Install any required offset supports.

11. Add lengths of pipe and firestop as necessary until assembly extends to a point above the roof which complies with local code requirements for minimum termination height and with the appliance manufacturer's installation instructions. (Fig. 45)

Roof Pitch	Minimum Height
Flat to 7/12	1'0"
Over 7/12 to 8/12	1'6"
Over 8/12 to 8/12	2'0"
Over 9/12 to 10/12	2'6"
Over 10/12 to 11/12	3'3"
Over 11/12 to 12/12	4'0"
Over 12/12 to 14/12	5'0"
Over 14/12 to 16/12	6'0"
Over 16/12 to 18/12	7'0"
Over 18/12 to 20/12	7'6"
Over 20/12 to 21/12	8'0"

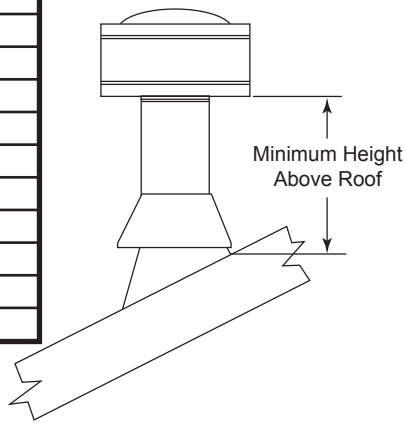

Fig. 45 Minimum Height Above Roof Requirements

NOTE: Whenever DIRECT-TEMP penetrates through a ceiling, a floor or a wall, it must be firestopped.

12. Using a level, make sure the system is perfectly vertical.

13. Slide the flashing, suitable for the roof pitch, down over the pipe protruding through the roof. Recheck orientation and use a silicone sealant around and under the perimeter of the flashing where it is in contact with the roof. Secure the flashing with roofing nails. Finish roofing around the pipe, covering the sides and upper ares of the flashing base with roofing material. However, be sure the lower unnailed portion of the base covers the roofing material.

14. Position the storm collar around the pipe and slide down until it is in contact with the flashing. Secure the storm collar by inserting the two (2) tabs into the raised slots and fold tabs back. Seal the area between the storm collar and the vent pipe with a silicone sealant to prevent rain infiltration.

15. Install the vertical termination (VC) by inserting it down into the top most section of pipe until it is fully seated. Depress lock tab to secure the cap to the pipe. **NOTE:** In high wind areas, it is recommended to screw termination to the pipe with two (2) #8 x 1/4" sheet metal screws. The screws should be approximately 3/4" from the bottom of the vertical termination's galvanized collar.

Install Log Set

Before beginning log installation, remove stove front and glass frame. Refer to Figures 46 and 47.

CAUTION: Before installation, inspect ember bed burner for damage. **Do not use** ember bed if damaged or cracked. **NOTE:** Small, shallow surface cracks are acceptable.

1. Remove the logs from their packaging and inspect each piece for damage. **DO NOT INSTALL DAMAGED LOGS.**

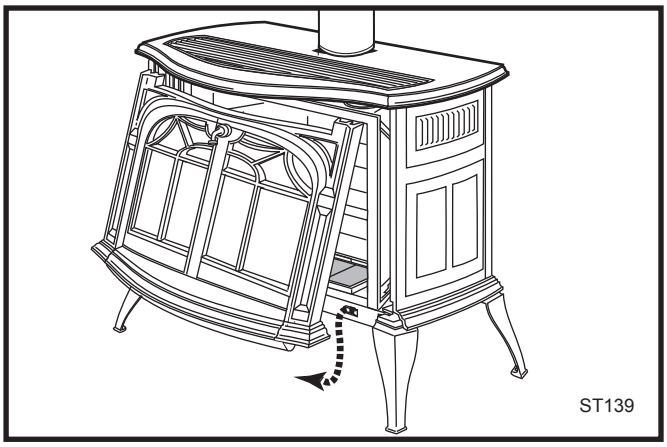

Fig. 46 Remove the stove front.

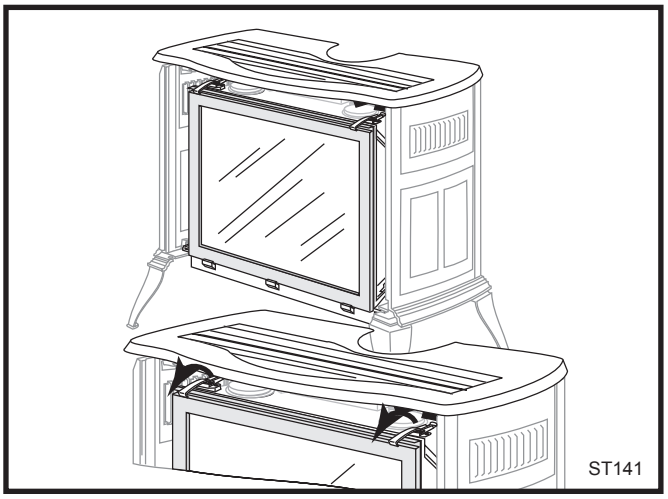

Fig. 47 Release the latches to remove the glass frame.

2. Install the rear log by placing it on the ember bed toward the back of the firebox. (Fig. 48) The log should touch the back wall of the firebox. When the log is in place, the two (2) notches on the bottom of the log rest on the two (2) ribs on the back side of the ember bed. (Fig. 49)

Figure 48

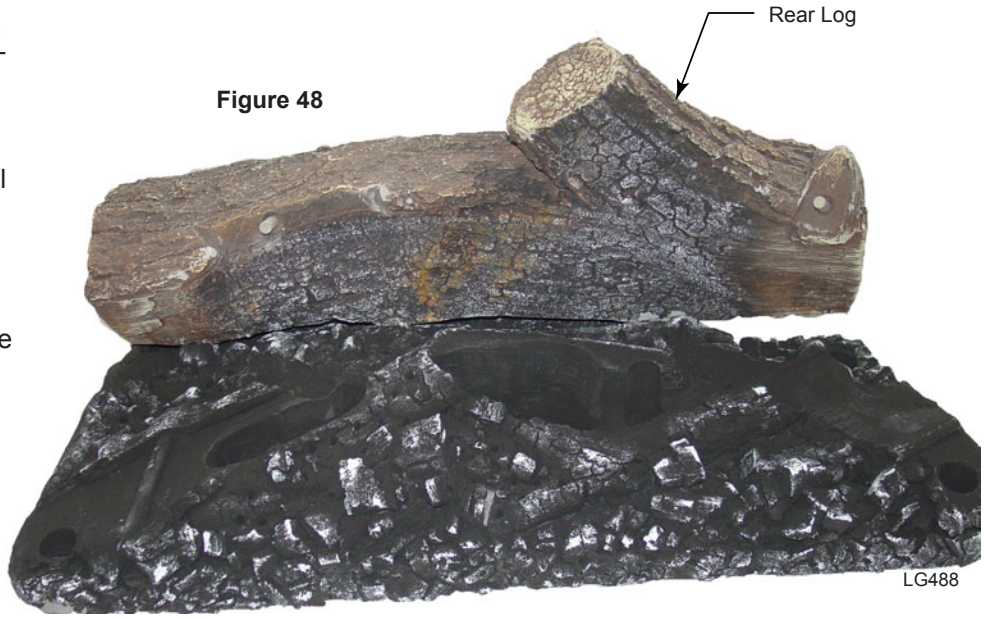

Figure 49

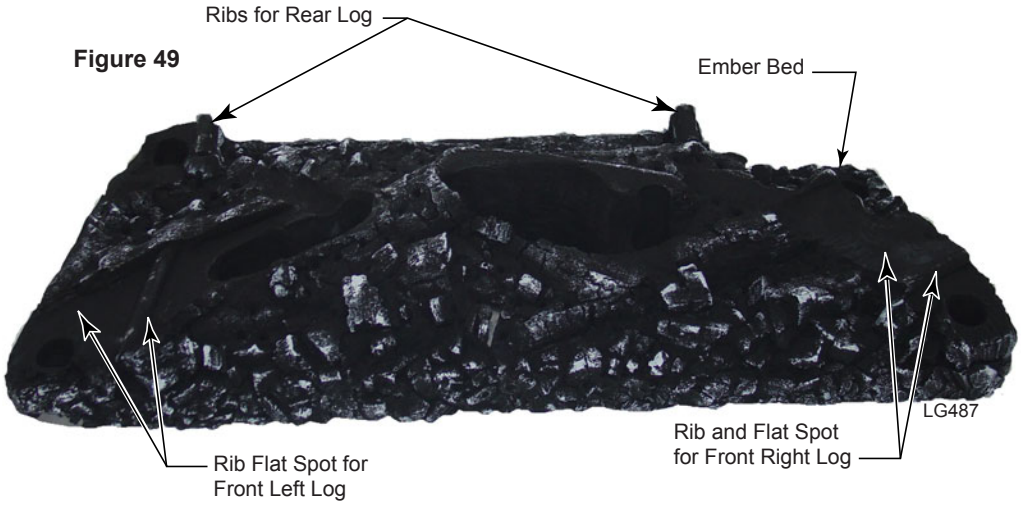

3. Install the front left and right logs (Fig. 50) by placing them on the ribs shown in Figure 49. Make sure the logs line up with the flat spots on the ember bed intended for location purposes. (Fig. 49)
4. Install the left cross log by engaging the hole on the bottom with the pin on the left side of the rear log. Set front side of cross log on notch in ember bed. (Fig. 51)
5. Install the right cross log by engaging the hole on the bottom with the pin on the right side of the rear log. Set front edge of cross log on ember bed as shown in Figure 51.

Figure 50

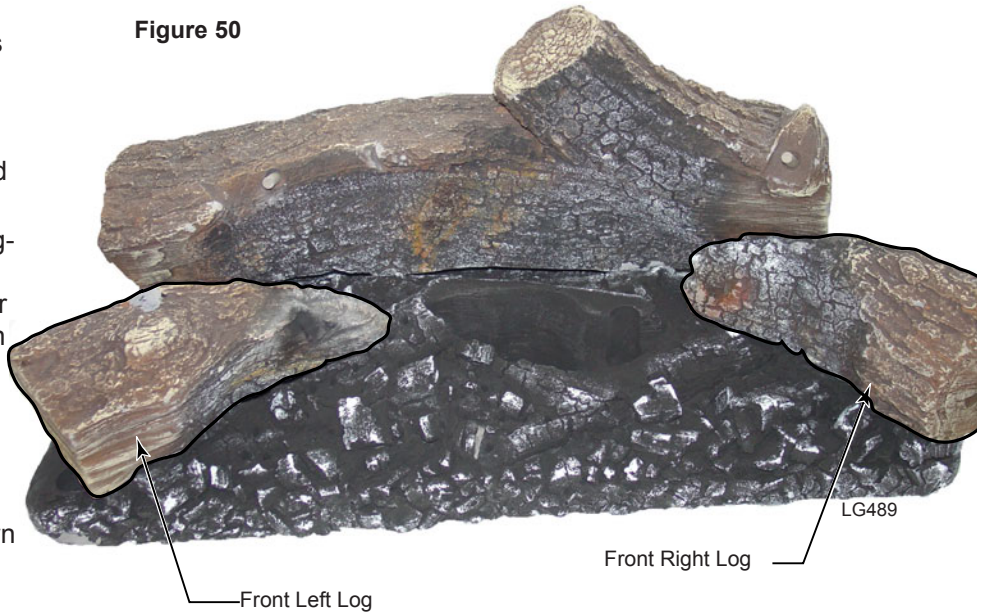

Figure 51

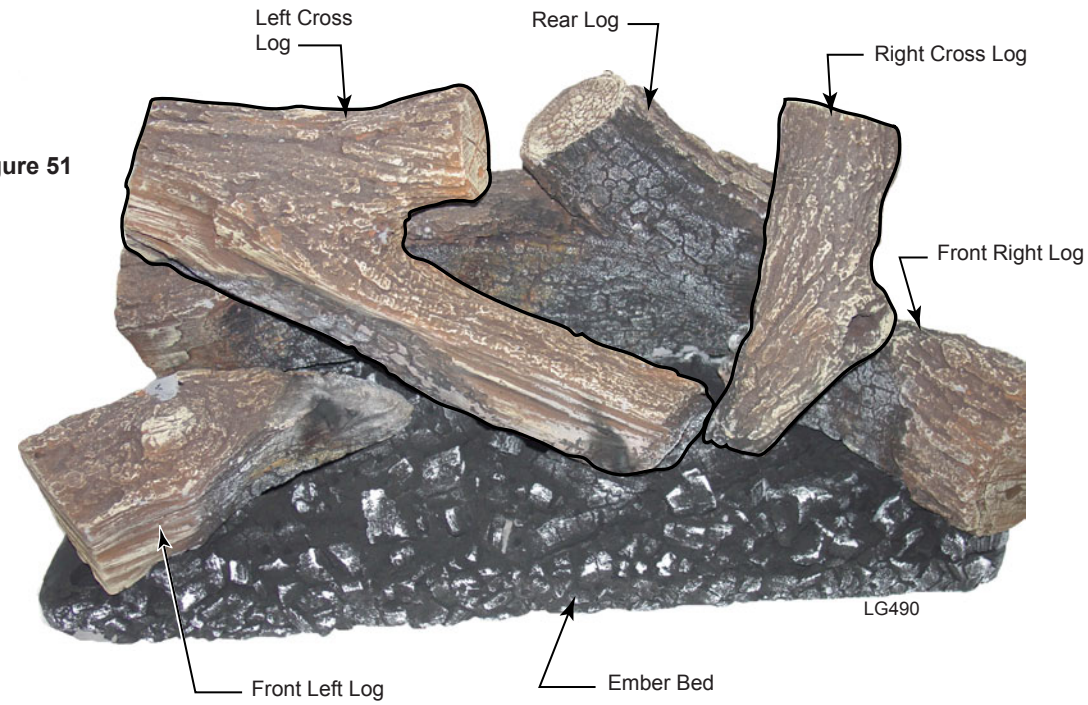

Connect the Gas Supply Line

Check the Rating Plate attached by a steel cable to the firebox, to confirm that you have the appropriate firebox for the type of fuel to be used. The Radiance may be converted from one gas to another using the appropriate Fuel Conversion Kit listed on Page 46.

In the U.S.; Gas connection should be made in accordance with current National Fuel Gas Code, ANSI Z223.1/NFPA 54. Since some municipalities have additional local codes, be sure to consult your local authority.

In Canada; consult the local authority and CSA-B149.1 installation code.

Always check for gas leaks with a mild soap and water solution. Do not use an open flame for leak testing.

Light the pilot according to the directions on Page 31, before going to the next step.

Burner Information

The appliance must only use the gas specified on the rating plate, unless converted using a Vermont Castings Fuel Conversion Kit. To convert from Natural Gas to LP use Kit 20012729 or 20012900. To convert from LP to Natural Gas use Kit 20012899 or 20012902.

Conversion instructions are provided with each kit and beginning on Page 37 in this manual.

CAUTION

This appliance should only be connected by a qualified gas technician. Test to confirm manifold pressures as specified below.

The Radiance Heater and its individual shutoff valve must be disconnected from the gas supply piping during any pressure testing of that system at test pressures in excess of 1/2 psig (3.5 kPa).

The Radiance Heater must be isolated from the gas supply piping system by closing its individual manual shutoff valve during any pressure testing of the gas supply piping system at test pressure equal to or less than 1/2 psig.

There must be a gas shutoff between the stove and the supply.

In order to connect Natural Gas, use a fitting with 1/2” NPT on the valve side and 1/2” natural gas supply line with an input of 38,000 BTUs at a manifold pressure of 3.5” between minimum inlet supply of 5.5” w.c. and maximum of 14.0” w.c.

In order to connect Propane, use a fitting with 1/2” NPT on the valve side and 1/2” propane gas supply line with an input of 36,000 BTUs at a manifold pressure of 10.0” between a minimum inlet supply of 11.0” w.c. and maximum of 14.0” w.c.

THIS APPLIANCE SHOULD BE CONNECTED TO THE GAS SUPPLY ONLY BY A QUALIFIED GAS SERVICE TECHNICIAN. FOLLOW ALL LOCAL CODES.

THERE MUST BE A GAS SHUT-OFF BETWEEN THE STOVE AND THE SUPPLY.

Install ON/OFF Switch - RADVT Series

The switch assembly parts are found in the parts bag.

1. Attach switch assembly to left rear side of stove shroud (when facing shroud) using two screws and existing holes in shroud. (Fig. 52)
2. Run wires down back of stove, under bottom of rear shroud to valve.
3. Attach wires to valve terminals. (Fig. 53)

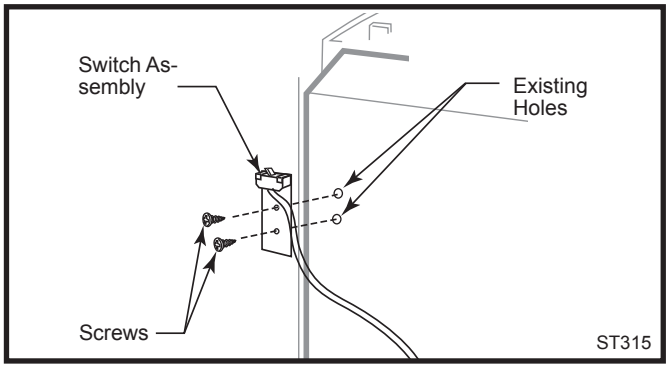

Fig. 52 Attach switch assembly to rear shroud.

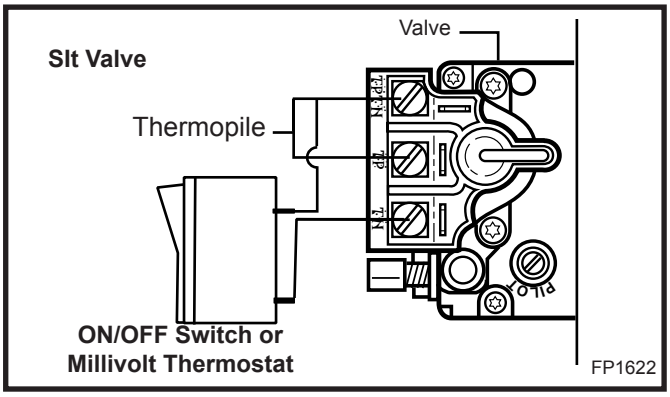

Fig. 53 Install wiring to switch before connecting to valve.

Thermostat Connection (optional)

Use only a thermostat rated for 500 - 750 millivolts.

Check the table below for the appropriate gauge thermostat wire to use for the length of lead required in your installation.

Thermostat Wire / Gauge	Maximum Run
18	20 feet
16	20 - 40 feet
14	up to 60 feet

1. Install the wall thermostat in the desired location and run the wires to the stove location. Terminate these leads with 1/4” female connectors.
2. Connect the thermostat wires to the valve. (Fig. 53)

Receiver Installation - RADVTCS Series

Once the blower is installed to the back of the RADVTCS Series stove, install the receiver.

1. Slide receiver into igniter bracket as shown in Figure 54.
2. Attach igniter bracket with receiver to valve with #10-32 x 1/4 screws supplied.
3. Connect receiver wiring to valve as shown on Page 44, Figure 91.
4. Plug igniter wire from burner into the back of the igniter bracket.

Receiver installation complete.

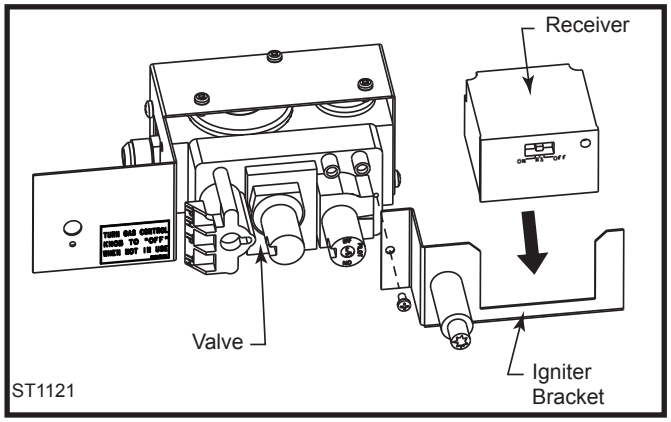

Fig. 54 Install receiver.

Install the Mesh and Grille

Place the mesh and grille on the top of the Radiance stove to complete assembly.

Operation

WARNING

HOT GLASS WILL CAUSE BURNS.

DO NOT TOUCH GLASS UNTIL COOLED.

NEVER ALLOW CHILDREN TO TOUCH GLASS.

The Radiance is operated with the front plate in place with the doors open or closed. To open the front doors, pull forward to separate the magnetic catch.

CAUTION: DO NOT TOUCH DOORS WHEN HOT!

Your First Fire

Read these instructions carefully and familiarize yourself with the burner controls shown on Page 31. Locate the pilot assembly, Figure 53. Follow the lighting instructions on Page 31 exactly.

During the first fire, it is not unusual to smell some odor associated with new logs, paint and metal being heated. Odors should dissipate within the first eight to ten hours, however, you can open a window to provide fresh air to alleviate the condition.

Pilot and Burner Inspection

Each time you light your heater check that the pilot flame and burner flame patterns are as shown in Figure 56. If flame patterns are incorrect, turn the heater off. Contact your dealer or a qualified gas technician for assistance. Do not operate the heater until the pilot flame is correct.

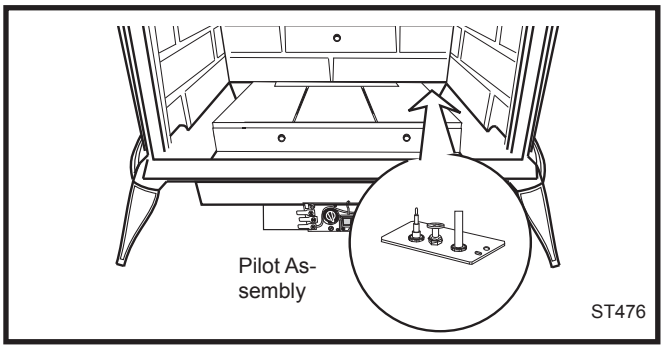

Fig. 55 Pilot Assembly location.

Follow regular maintenance procedures as described on Page 41.

Flame & Temperature Adjustment

For stoves equipped with HI/LO valves, flame adjustment is accomplished by rotating the HI/LO adjustment knob located near the center of the gas control valve. (Fig. 54)

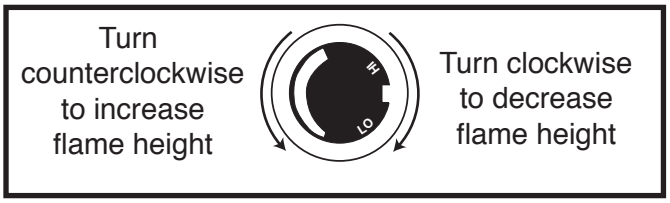

Fig. 56 Flame adjustment knob for SIT valve.

Flame Characteristics

It is important to periodically perform a visual check of the pilot and the burner flames. Compare them to Figure 55. If any of the flames appear abnormal, call a service person.

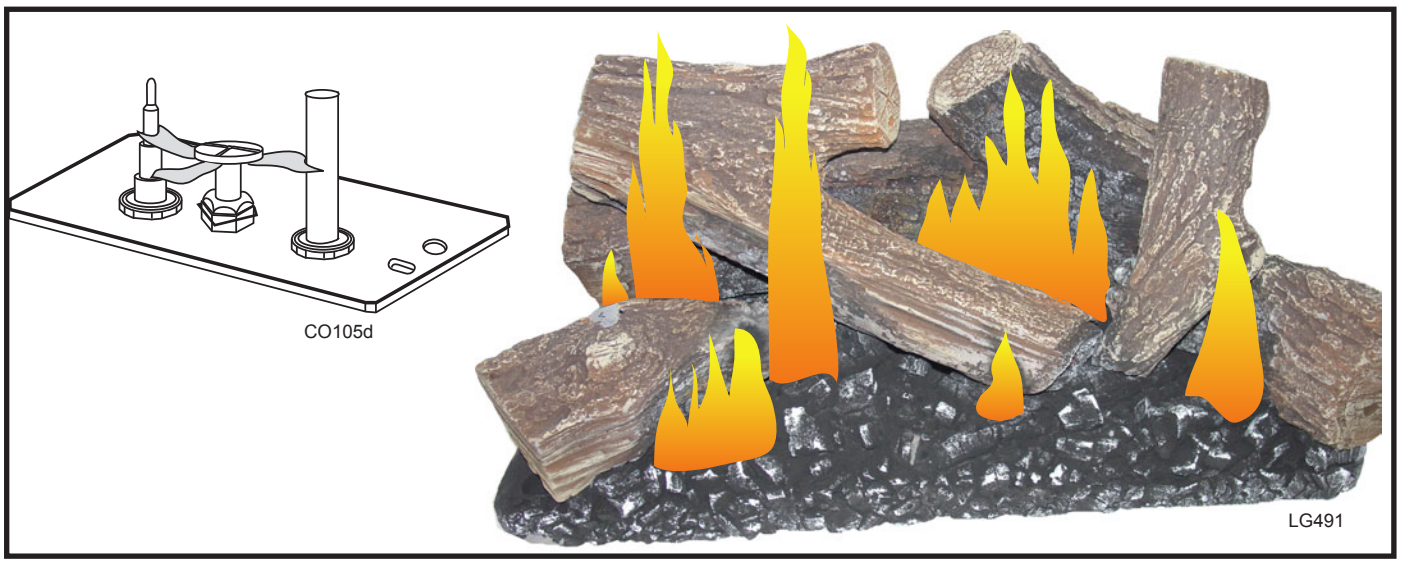

Fig. 57 Correct pilot and burner flame appearance.

Lighting and Operating Instructions

FOR YOUR SAFETY READ BEFORE LIGHTING

WARNING:If you do not follow these instructions exactly, a fire or explosion may result causing property damage, personal injury or loss of life.

A. This heater has a pilot which must be lit manually. When lighting the pilot follow these instructions exactly.

B. BEFORE LIGHTING smell all around the heater area for gas. Be sure to smell next to the floor because some gas is heavier than air and will settle on the floor.

WHAT TO DO IF YOU SMELL GAS

- Do not try to light any fireplace
- Do not touch any electric switch
- Do not use any phone in your building
- Immediately call your gas supplier from a neighbor's phone. Follow the gas supplier's instructions.
- If you cannot reach your gas supplier, call the Fire Department

C. Use only your hand to push in or turn the gas control knob. Never use tools. If the knob will not push in or turn by hand, do not try to repair it, call a qualified service technician. Applying force or any attempted repair may result in a fire or explosion.

D. Do not use this fireplace if any part has been under water. Immediately call a qualified service technician to inspect the heater and to replace any part of the control system and any gas control which has been under water.

Lighting Instructions

1. **STOP!** Read the safety information above.
2. Turn off all electrical power to the fireplace.
3. Turn the On/Off switch to "OFF" position, set the remote to OFF or set thermostat to lowest level.
4. Open control access panel.
5. Push in gas control knob slightly and turn clockwise ↷ to "OFF".

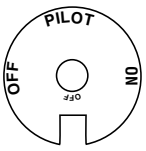

SIT NOVA

6. Wait five (5) minutes to clear out any gas. Then smell for gas, including near the floor. If you smell gas, STOP! Follow "B" in the safety information above. If you do not smell gas, go to the next step.
7. Remove glass door before lighting pilot. (See Glass Frame Removal section).
8. Visibly locate pilot by the main burner.
9. Turn knob on gas control counterclockwise ↶ to "PILOT".
10. Push the control knob all the way in and hold. Immediately light the pilot by repeatedly depressing the piezo spark ignitor until a flame appears. Continue to hold the control knob in for about one (1) minute after the pilot is lit. Release knob and it will pop back up. Pilot should remain lit. If it goes out, repeat steps 5 through 8.

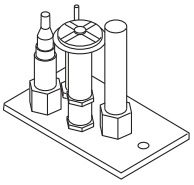

- If knob does not pop up when released, stop and immediately call your service technician or gas supplier.
- If after several tries, the pilot will not stay lit, turn the gas control knob to "OFF" and call your service technician or gas supplier.

11. Replace glass door.
12. Turn gas control knob to "ON" position.
13. Turn the On/Off switch to "ON" position or set thermostat to desired setting.
14. Turn on all electrical power to the fireplace.

To Turn Off Gas To Heater

1. Turn the On/Off switch to Off position or set the thermostat to lowest setting.
2. Turn off all electric power to the fireplace if service is to be performed.
3. Open control access panel.
4. Push in gas control knob slightly and turn clockwise ↷ to "OFF". Do not force.
5. Close control access panel.

Troubleshooting the Gas Control System (RADVT Series)

SIT NOVA 820 MILLIVOLT VALVE

NOTE: Before trouble shooting the gas control system, be sure external gas shut off is in the “On” position.

Symptom	Possible Causes	Corrective Action
1. Spark ignitor will not light	A. Defective or misaligned electrode at pilot	Using a match, light pilot. If pilot lights, turn off pilot and push the red button again. If pilot will not light - check gap at electrode and pilot-should be 1/8” to have a strong spark.
	B. Defective ignitor (Push Button)	With the control knob in the pilot position, push the control knob all the way and hold. Check for spark at electrode and pilot. If no spark to pilot, and electrode wire is properly connected, replace the battery in the ignitor module and try again. Refer to Maintenance Section. If the problem still exists, replace the ignitor module box.
2. Pilot will not stay lit after carefully following lighting instructions	A. Defective pilot generator (thermocouple), remote wall switch	Check pilot flame. Must impinge on thermocouple/thermopile. NOTE: This pilot burner assembly utilizes both a thermocouple and a thermopile. The thermocouple operates the main valve operation (On and Off). Clean and or adjust pilot for maximum flame impingement on thermopile and thermocouple.
	B. Defective automatic valve	Turn valve knob to “Pilot”. Maintain flow to pilot; millivolt meter should read greater than 10mV. If the reading is okay and the pilot does not stay on, replace the gas valve. NOTE: An interrupter block (not supplied) must be used to conduct this test.
3. Pilot burning, no gas to main burner	A. Wall switch or wires defective	Check wall switch and wires for proper connections. Jumper wire across terminals at wall switch, if burner comes on, replace defective wall switch.. If okay, jumper wires across wall switch wires at valve, if burner comes on, wires are faulty or connections are bad.
	B. Thermopile may not be generating sufficient millivoltage	1. Be sure wire connections form thermopile at gas valve terminals are tight and thermopile is fully inserted into pilot bracket. 2. One of the wall switch wires may be grounded. Remove wall switch wires form valve terminals if pilot now stays lit, trace wall switch wiring for ground. May be grounded to fireplace or gas supply. 3. Check thermopile with millivolt meter. Take reading at thermopile terminals of gas valve. Should read 250-300 millivolts (minimum 150) while holding valve knob depressed in pilot position and wall switch “Off”. Replace faulty thermopile if reading is below specified minimum.
	C. Plugged burner orifice	Check burner orifices for debris and remove.
	D. Defective automatic valve operator	Turn valve knob to “On”, place wall switch to “On” millivolt meter should read greater than 150mV. If the reading is okay and the burner does not come on, replace the gas valve.
4. Frequent pilot outage problem	A. Pilot flame may be too low or blowing (high) causing the pilot safety to drop out	Clean and/or adjust pilot flame for maximum flame impingement on thermopile and thermocouple.
	B. Possible blockage of the vent terminal	Check the vent terminal for blockage (recycling the flue gases).

Instructions for RCSITEA

RADVTCS Series

CAUTION: The RCSITEA is only certified for use on vented heater rated equipment.

This remote control system provides a safe, reliable and user-friendly remote control for millivolt valve gas appliances, blower speed and flame height adjustment. The system can be manually or thermostatically turned on and off with the transmitter.

Carefully inspect the contents for shipping damage. If any parts are missing or damaged, immediately contact your dealer. Do not attempt to install any part of the kit unless all parts are in good condition. Refer to instructions provided with the kit for complete installation instructions.

WARNING: Make sure 120V AC fan and SIT valve are correct. If not wired correctly, damage to receiver could result. Make sure the wires do not contact the appliances any place other than at the terminals. Exposure to temperatures higher than 250°F (105°C) may cause the receiver to malfunction and cause possible fire hazard.

Remote Transmitter

Install Batteries

The remote transmitter uses three (3) “AAA” batteries.

1. Press down the battery door tab and pull out to remove the battery door. (Fig. 58)
2. Install the batteries as indicated on transmitter.
3. Close the battery door by snapping in place.
4. When three (3) batteries are installed, the transmitter will initialize for 10 seconds and then is ready for use.
5. The batteries should be replaced at least once every six (6) months or when the low battery indicator is displayed.

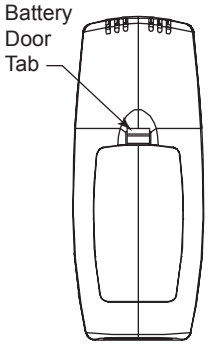

Fig. 58 Battery door tab.

Setting Privacy (DIP) Switch on Receiver and Transmitter

The remote receiver and transmitter privacy (DIP) switches are preset at the factory. In the event of activation or interference from other nearby transmissions, reset the code using the following procedure:

1. Slide the code switches on the transmitter and receiver to choice of ON or OFF position. Switches #1, #2, #3 and #4 are preset to “ON” for both the transmitter and receiver. (Fig. 59)
2. The switches on the transmitter and receiver must match in order for the system to work.
3. To check, press either the ON or OFF button on the transmitter and the receiver indicator light will blink. If not, repeat Step 2.
4. The system is now ready to operate.

NOTE: Refer to optional 6 Hour Shutdown.

WARNING: Do not use two (2) or more remote control systems in the same area with the same dip switch settings, they will communicate with each other. This may cause the appliances to malfunction.

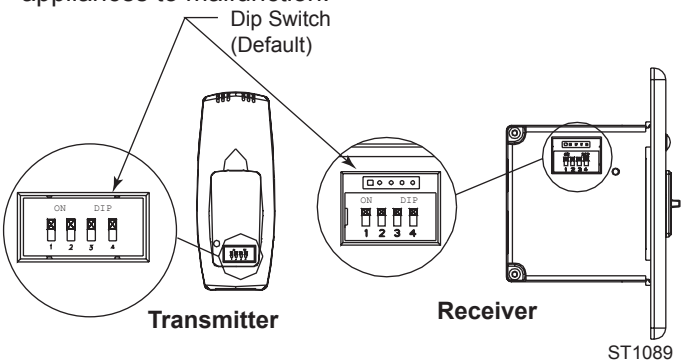

Fig. 59 The switches on the transmitter and receiver must match.

Reset Button

The reset button can be used to reset the transmitter if transmitter is not working properly. The reset button is located behind the battery door cover in the lower left corner of battery compartment. Using a paper clip, press the reset button and the transmitter will reset and initialize for 10 seconds before it can be used.

Operation

Transmitter

General

The RCSITEA Remote Control has two (2) operating modes: Manual and Thermostatic. The control system can be set to temperature ranges between 45°F and 90°F. The blower speed and flame height can be adjusted in either the manual or thermostatic mode.

The transmitter will operate the remote receiver from 1 foot to a maximum of 30 feet. The distance is reduce when batteries are low or when the receiver is inside a metal enclosure.

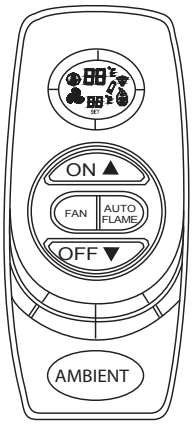

Fig. 60 RCSITEA remote transmitter.

Initial Startup

Figure 61

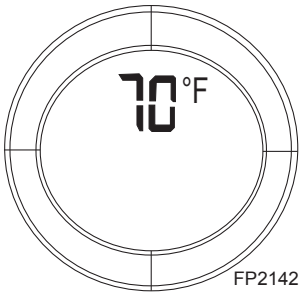

Fig. 61 Typical Reset Display

1. After initial power up or when RESET button is pressed, the transmitter is reset. The reset button is located behind the battery door of transmitter.
2. During system reset, all features of the LCD DISPLAY will be visible. After one second, the LCD will be initialized. A typical reset display is shown in *Figure 60*. Note the temperature scale is degree F.
3. Press ON button to select between °C and °F display. It will exit setting mode automatically after 10 seconds if no key is pressed. The transmitter will send an OFF signal after reset.
4. After reset, the transmitter is operating in manual mode. The room temperature is shown.

Manual Mode

Figure 62

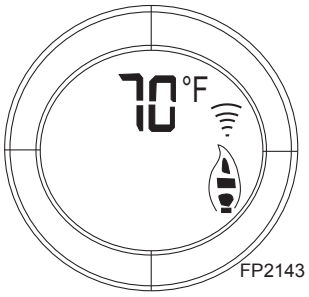

Fig. 62 Manual mode.

1. Press the ON button once to turn on the appliance with max flame height.
2. Press the OFF button to decrease flame height. The first two (2) presses will decrease flame height to lower level. The third press will turn off the fireplace.
3. If the OFF button is held for more than three (3) seconds, the fireplace will be shut off.

Thermostatic Mode

Figure 63

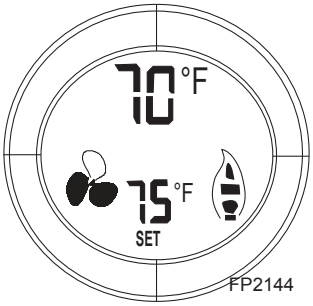

Fig. 63 Thermostatic mode.

1. Press the AUTO/FLAME button to enter the thermostatic mode.
2. In thermostatic mode, press the ON / ▲ button or OFF / ▼ button to set the desired set temperature.
3. Once the setting is completed, the transmitter will automatically turn on the fireplace when the room temperature is below the set temperature and turn off the fireplace when the room temperature is above the set temperature within 1 degree.
4. There will be a slight delay in the response of the unit (on/off) to a temperature. Room temperature is monitored every three (3) minutes.
5. Press AUTO/FLAME button to exit the thermostatic mode. The transmitter will be in the manual off mode and the fireplace will be shut off.

Flame Height Setting for Thermostatic Mode

Figure 64

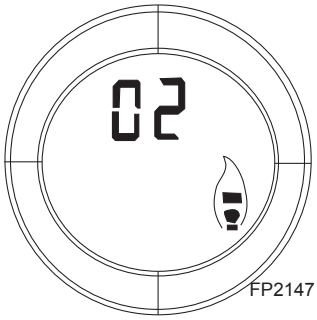

Fig. 64 Flame height setting.

1. Hold AUTO/FLAME button for five (5) seconds and one number and flame icon will appear in LCD screen.
2. Use the ON / ▲ or OFF / ▼ button to set the desired flame height to 1 (min.) 2 (medium) or 3 (max.).
3. If there is no input within three (3) seconds, the new setting will be transmitted to the receiver. This setting only affects auto mode operation.
4. The default setting for transmitter is 2 (medium).

3-Speed Blower Control

Figure 65

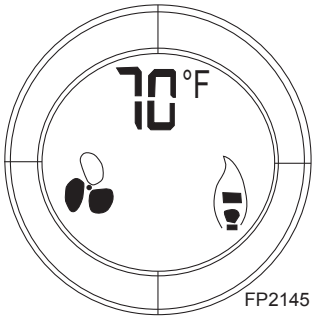

Fig. 65 3 speed blower control.

1. Press FAN button once to enter blower speed setup mode at low speed initially and one of the three blade icons will display darkened on LCD display.
2. Continue to press FAN button to set the blower speed you desire.
3. If there is no input within three (3) seconds, the new setting will be transmitted to receiver. If the fireplace is on, the blower speed will take effect right away; if the fireplace is off, the receiver will remember this setting and blower is still off.
4. If you continue to press FAN button to the position that all blades are gone, the FAN icon will disappear and turn the blower off.

Blower On Delay Time and OFF Delay Time Setting (Default 5 ON / 8 OFF)

Figure 66

1. Hold FAN button for five (5) seconds and two (2) numbers will appear in the LCD screen. The upper one is ON Delay Time and the bottom is OFF Delay Time in minutes.

2. Use the ON / ▲ button to set the desired On Delay Time from 0 to 15 minutes.
3. Use the OFF / ▼ button to set the desired Off Delay Time from 0 to 15 minutes.
4. If there is no input within 3 seconds, the new setting will be transmitted to receiver.

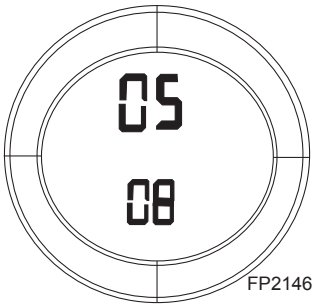

Fig. 66 Blower time delay display.

5. The default settings for both transmitter and receiver are 5 minutes for ON delay time and 8 minutes for OFF delay time.

Low Battery Detection

Figure 67

1. Battery voltage is checked once a minute. When the battery voltage drops to a certain level, the low-battery icon will display on LCD, and the transmitter will turn off the appliance. The transmitter will not function anymore until fresh batteries are installed.

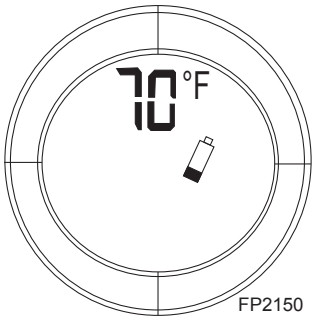

Fig. 67 Low battery display.

2. When the batteries are low, the LCD displays a low battery indicator. The low battery indicator will be displayed in any mode.
3. The transmitter will not operate with low batteries. Change the batteries before the batteries are too weak for normal operation. Turn the unit OFF before replacing batteries.

Child-Proof Protection

Figure 68

1. Press and hold the ON and OFF buttons simultaneously for three (3) seconds to enter child proof mode.
2. The transmitter will not send a signal again until the childproof mode is deactivated by pressing the ON and OFF buttons simultaneously for three (3) seconds to exit child proof mode. The Childproof indicator disappears from LCD.

Fig. 68 Child protection display.

Transmitter Thermal Shutdown

Figure 69

1. If transmitter measures a room temperature exceeding 99° F, the LCD will display "HI" and the transmitter will turn off the appliance.
2. Transmitter will not function until the room temperature has dropped below 99° F. If transmitter measures a room temperature less than 40° F, the LCD will display "LO" and NO SIGNAL will be sent to turn on the appliance.

Fig. 69 Thermal shutdown display.

Receiver

Slide Switch

1. ON position: The main burner will ignite and blower will come on when blower on delay time is reached and fan speed has been enabled, the flame height is max; otherwise just burner will ignite until the slide switch is placed in the OFF or RS position to turn burner off.
2. RS position: The system will only operate if the remote receiver receives a signal from the transmitter.
3. OFF position: The system is off. If fan speed has been enabled, blower will continue to operate until OFF delay time expires. The slide switch should be placed in the OFF position if you will be away for an extended period of time. If the remote receiver is mounted out of reach of children, the OFF position also functions as a safety device by both turning the system off and rendering the receiver inoperable.

Optional 6 Hour Shutdown

1. The receiver comes preset from the factory with a 6 hour shutdown from its last ON or flame lower operation. This is done to prevent the appliance from continuing to operate if unattended.
2. You may disable this feature if you wish. To disable, change the receiver privacy (DIP) switch #1 ONLY to the OFF position. Make sure the transmitter privacy (DIP) switches are set the same as the receiver. Follow the instructions on how to set the privacy (DIP) switch setting.
3. By disabling this feature, your appliance may continue operating unattended.

Testing Remote Control System

1. Light the gas appliance following the lighting instructions on Page 31. Confirm the pilot light is on; it must be in operation for the remote control to operate the main gas valve and blower. Appliance control knob must be in the ON position, and ON/OFF switch must be in OFF position.
2. Slide the 3 position button on the remote receiver to the ON position and the main gas flame should ignite.
3. Slide the button to OFF and the main gas flame should extinguish, but the pilot light will remain lit.
4. Slide the button to RS (the center position). Press the ON button on transmitter to turn the system ON. The main gas flame should ignite and blower should come on after the On delay time is reached and fan speed you desire is selected.
5. Press the OFF button on transmitter to turn the system to OFF. The flame should extinguish (the pilot light will remain lit) and blower should be off after the Off delay time is you set is reached.

Troubleshooting

Symptom	Causes	Action
1. Battery icon on LCD on transmitter. 2. LCD display is blank. 3. LCD display shows “funny” display.	1. Low battery.	1. Replace batteries. Change the batteries every 6 months. 2. Check battery installation or replace batteries. 3. Press reset button at the back of the transmitter.
4. Appliance does not come on.	1. Wiring/Electrical connections.	1. Slide the switch to ON, if appliance comes on, wiring is not the cause. 2. If appliance, does not come on, check wiring connections.
	2. Privacy (DIP) switch setting on transmitter does not match receiver.	1. Make sure the transmitter and receiver have the same DIP switch settings.
	3. Transmitter measure temperature exceeding 99°F and shows “HI” on LCD.	1. Move transmitter to a cooler place and wait until temperature drops below 99°.
	4. Distance between the transmitter and receiver is more than 30 feet.	1. Make sure the operating distance is less than 30 feet.
5. Receiver cannot receive signal.	1. Receiver is installed in an enclosure.	1. Make sure the receiver is not located inside too tight of an enclosure.
6. Blower is not on after the stove is turned on.	1. Blower setting is off.	1. Press FAN key to select desired fan speed.
	2. Blower delay setting is set too high.	2. Press and hold Fan key to set desired ON/OFF delays. This is done in minutes.

Fuel Conversion Instructions

WARNING! This conversion kit shall be installed by a qualified service agency in accordance with the manufacturer's instructions and all applicable codes and requirements of the authority having jurisdiction. If the information in these instructions is not followed exactly, a fire, explosion or production of carbon monoxide may result causing property damage, personal injury or loss of life. The qualified service agency is responsible for the proper installation of this kit. The installation is not proper and complete until the operation of the converted appliance is checked as specified in the manufacturer's instructions supplied with the kit.

CAUTION: The gas supply shall be shut off prior to disconnecting the electrical power, before proceeding with the conversion.

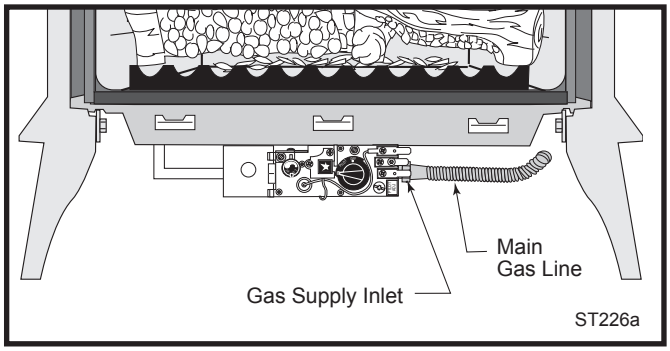

Fig. 70 Attach the gas line to the right side of the valve.

Conversion Precautions

Before proceeding, turn control knob on valve to OFF and turn gas supply OFF. Turn OFF any electricity that may be going to the appliance.

Conversion Procedure

1. Remove stove front. Lift stove front up and then swing bottom out and away to disengage from the stove body. (Page 26, Fig. 46)
2. Undo the right and left latches at the top of the glass frame. (Page 26, Fig. 47)
3. Pull the top edge of the glass and frame assembly away from the firebox face. Place the assembly out of the way on a flat, padded surface such as a counter protected by a towel.
4. Remove the logset from the firebox.

Valve Conversion

RADVT Series Models

1. Turn control knob to the OFF position, and shut off the gas supply to the valve.
2. Allow the valve to cool to room temperature.
3. Remove the black protection cap by hand. (Fig. 71)
4. Insert a 5/32" or 4 mm Allen wrench into the hexagonal key-way of the screw (Fig. 72), rotate it counter-clockwise until it is free and extract it.
5. Check that the screw is clean and if necessary remove dirt.
6. Flip the screw. (Fig. 73)
7. Using the Allen wrench as shown in Figure 74, rotate the screw clockwise and tighten until snug.

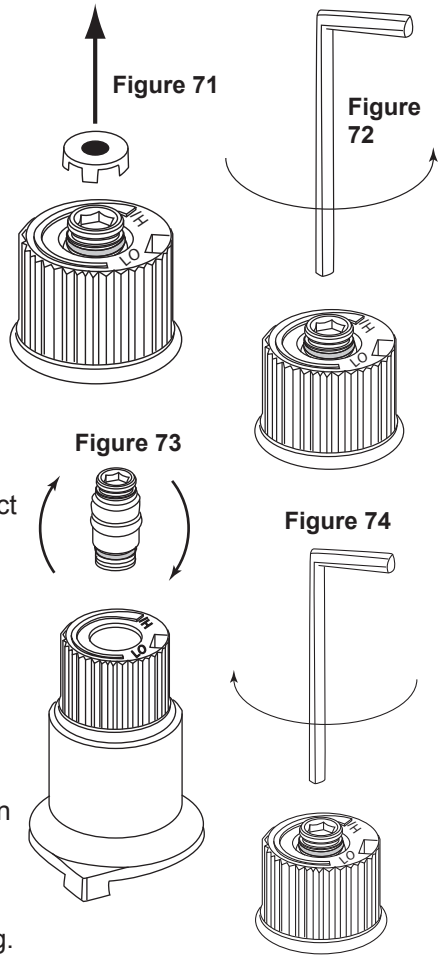

WARNING: Do not overtighten the screw. Recommended to grip the wrench by the short side.

8. Verify that if the conversion is from NG to LP, the screw must be reassembled with the red o-ring visible. (Fig. 75)

Figure 75

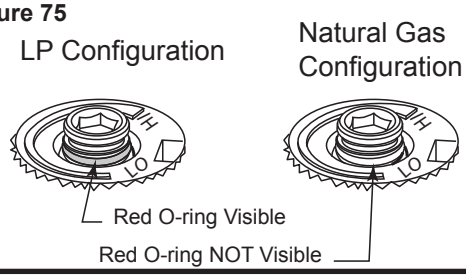

9. Replace the black protection cap.

WARNING: Check that also the pilot and main burner injectors are appropriate for the gas type.

RADVTCS Series Models

1. Using the TORX T20 bit remove and discard the three (3) pressure regulator mounting screws from the old pressure regulator assembly. (Fig. 76)

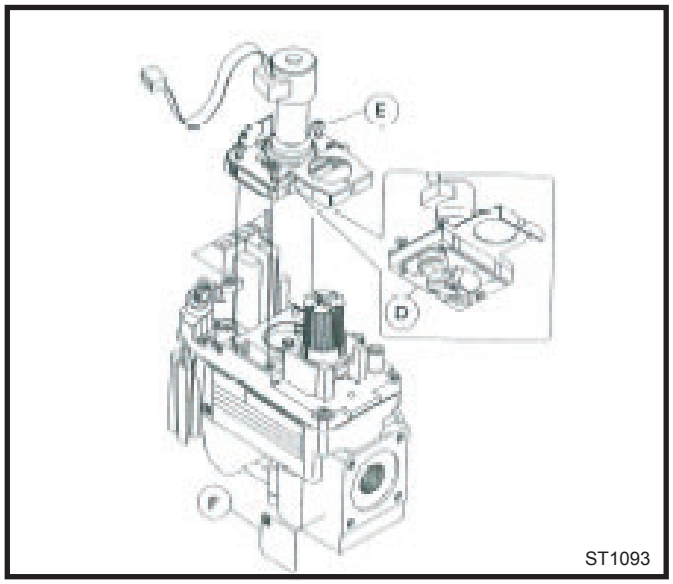

Fig. 76 Remove mounting screws from old pressure regulator assembly. Replace step motor with new conversion step motor.

2. Insure the rubber gasket (D) is properly positioned and install the new step motor (E) pressure regulator assembly to the valve using the new screws supplied with the kit. Tighten the screws securely. (Ref. torque = 25 in/lb) (Fig. 76)
3. Install the identification label (F) supplied with the stepper motor to the valve body where it can easily be seen. (Fig. 76)
4. Make step motor and mV valve electrical connections.
5. Regulator conversion complete.
6. Test for Leaks

Pilot Orifice Conversion

1. Locate pilot. (Fig. 77)

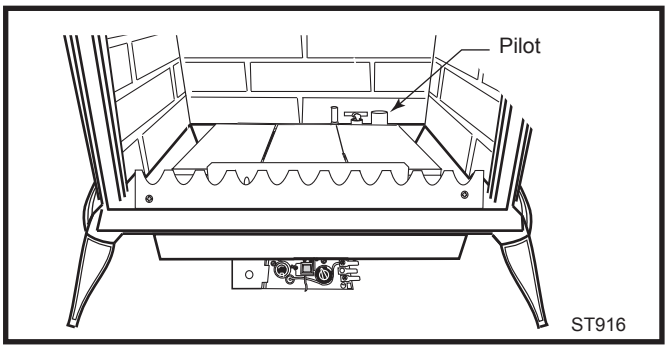

Fig. 77 Locate pilot.

2. Replace pilot orifice.
3. Remove pilot hood by lifting up. (Fig. 78) Do not remove the snap ring to remove the pilot hood. **NOTE:** It is not necessary to remove the pilot tube for conversion.

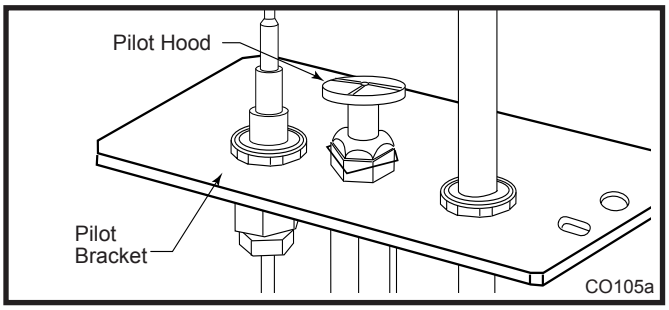

Fig. 78 Remove pilot hood.

4. Remove pilot orifice with Allen wrench. (Fig. 79)
5. Install the conversion orifice.
6. Reinstall pilot hood. Be sure to align hood with index tab.

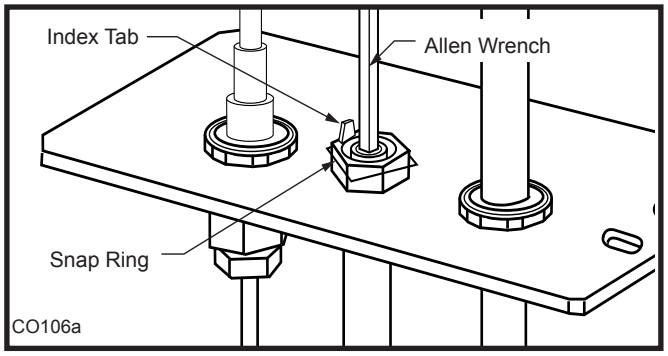

Fig. 79 Remove pilot orifice.

Burner Orifice Conversion

1. Remove three (3) 3/8” nuts on bottom side of burner pan. (Fig. 80)
2. Carefully remove ember bed by tilting the right side up and lifting out toward the right side of the unit. (Fig. 81)

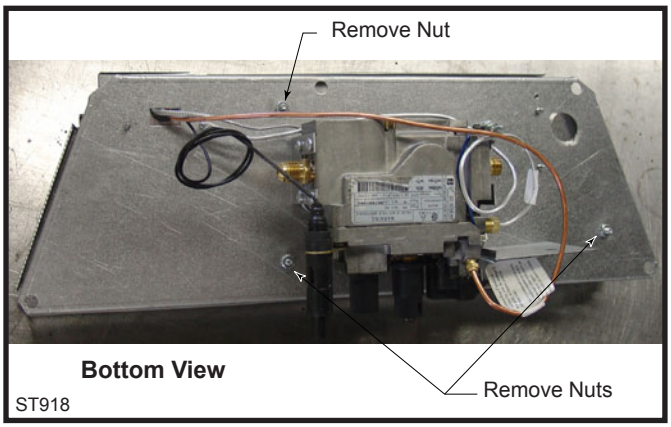

Fig. 80 Remove three (3) nuts securing ember bed in place.

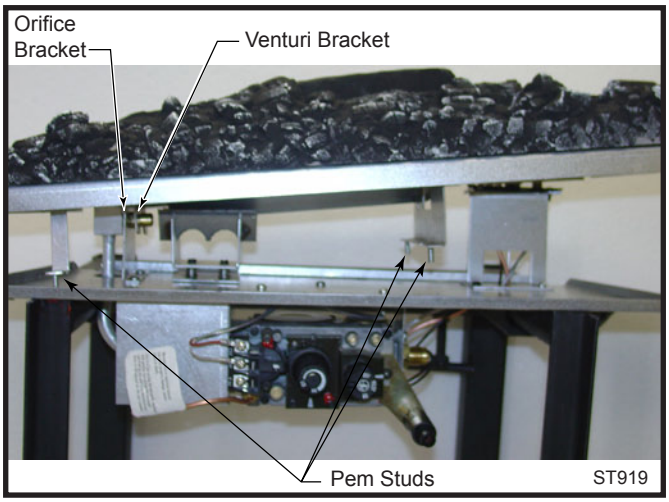

Fig. 81 Tilt ember bed slightly to correctly place on venturi and air shutter.

3. Remove injector orifice from left burner bracket with a 1/2” wrench. Use a back up wrench to prevent damage to the manifold. (Fig. 82)
4. Install conversion orifice. (Refer to Table 2)
5. The air shutter is factory set according to Table 3 and should not need adjustment. The air shutter opening may be verified by measuring as shown in Figure 83.

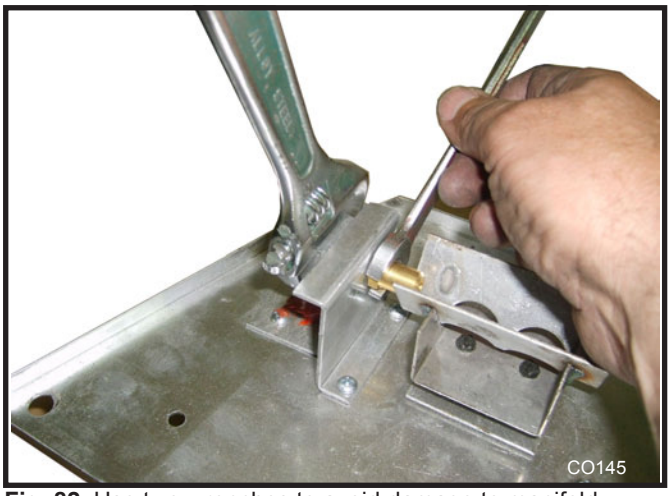

Fig. 82 Use two wrenches to avoid damage to manifold.

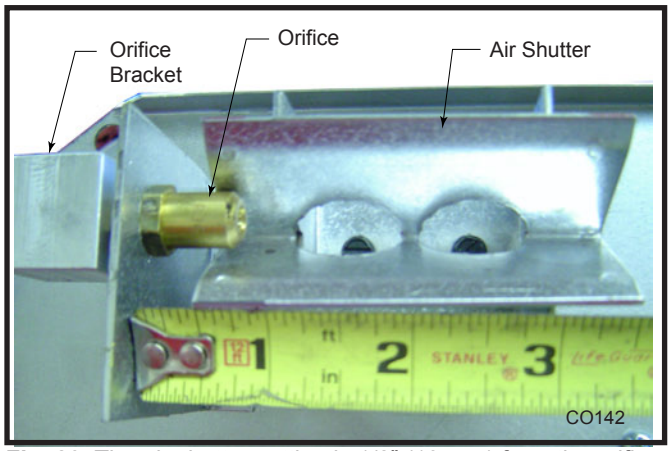

Fig. 83 The air shutter setting is 1/2” (13 mm) from the orifice bracket to the edge of the air shutter.

All Models

1. Replace burner making sure venturi on bottom of ember bed aligns with orifice and is seated properly on air shutter assembly. (Fig. 81) Make sure burner is slid into place at a slight angle and opposite to how it was removed. When burner is slid into place, the three (3) pem studs should slide down through clearance holes into the bottom of the control panel.
2. Thread and tighten 3/8” nuts back onto pem studs on underneath side of control panel, reversing Step 1 shown in Figure 80.
3. Reinstall logs as per instructions on Page 26.
4. Place conversion label supplied with kit on rating plate.
5. Replace glass and stove front.
6. Restore gas to system and relight appliance according to Lighting Instructions on Page 31.
7. Leak check the system using a gas leak detector solution.
8. Relight the main burner in both the “HI” and “LO” positions to verify proper burner ignition and operation.

Conversion is complete.

Table 2. Injector Orifice Size Matrix

Conversion to LP					
				Input (BTU/h)	
Model	Kit #	Orifice	Part #	Minimum	Maximum
RADVT	20012729	1.75 mm	20012946	25,000	36,000
RADVTCS	20300165				
Conversion to Natural Gas					
				Input (BTU/h)	
Model	Kit #	Orifice	Part #	Minimum	Maximum
RADVT	20012899	#31 / 0.120”	20006927	25,000	38,000
RADVTCS	20300166				

Table 3. Air Shutter Adjustment

Model	Natural Gas	Natural Gas High Altitude	LP
RADVT/RADVTCS	1/2” Open	1/2” Open	1/2” Open

Table 4. High Altitude Orifice

[Required for altitudes above 2000’ (610 m) up to 4500’ (1,370 m)]				
			Input (BTU/h)	
Model	Orifice	Part #	Minimum	Maximum
RADVT/RADVTCS (Natural gas only)	#33 / 0.113”	20012554	25,000	36,000

*LP models do not need re-orificed up to 4500’ (1,370 m) above sea level.

Maintenance

Your Radiance Gas Heater will provide years of service with minimal upkeep. The following procedures will help ensure that your stove continues to function properly.

Annual System Inspection

Have the entire heater and venting system inspected annually by a qualified gas technician. Replace any worn or broken parts.

Logset and Burner / Cleaning and Inspection

Cleanliness is critical to the proper function of the heater. The logset and burner must all be kept free of dust and unobstructed by debris. Inspect these areas before each use and clean as necessary.

1. Turn the burner OFF and let the heater cool completely before cleaning.
2. Lift the Stove Front up and then swing the bottom out to disengage it from the heater shell. (Fig. 83)
3. Carefully remove the glass and frame assembly and place it out of the way on a flat, padded surface such as a counter protected by a towel.
4. Carefully inspect the Logs for damage. Contact your local dealer if any damage is evident.
5. Use a soft bristled brush to sweep dust or debris from the Logs, Pilot and Burner. Use care as the logs are fragile and susceptible to damage.
6. Replace the glass panel and frame assembly.
7. Replace the Stove Front.

Care of Cast Iron

An occasional dusting with a dry rag will help keep the *painted surfaces* looking new. Use high-temperature stove paints, available through your local dealer, to touch-up areas as needed. Clean areas to be painted with a wire brush and be sure to cover the logs, burner and valve assembly, glass and frame assembly. Apply the paint sparingly; two light coats of paint will give better results than a single heavy coat.

Clean *porcelain enamel surfaces* with a soft, damp cloth. Do not use abrasive cleaning agents. If necessary, use only a cleaning agent formulated especially for use on porcelain enamel surfaces.

CAUTION

TURN THE PILOT OFF BEFORE PAINTING. ALLOW THE HEATER TO COOL COMPLETELY BEFORE PAINTING.

Cleaning the Glass

WARNING: Allow the glass to cool completely before attempting to clean.

WARNING

HOT GLASS WILL CAUSE BURNS.

DO NOT TOUCH GLASS UNTIL COOLED.

NEVER ALLOW CHILDREN TO TOUCH GLASS.

It will be necessary to clean the glass periodically. During start-up, condensation, which is normal, forms on the inside of the glass and causes lint, dust and other airborne particles to cling to the glass surface. Also initial paint curing may deposit a slight film on the glass. It is therefore recommended that the glass be cleaned two or three times with a non-ammonia household cleaner and warm water (we recommend gas fireplace glass cleaner). After that the glass should be cleaned two or three times during each heating season depending on the circumstances present.

Clean glass after first two weeks of operation.

Glass Replacement

Replace glass only with MHSC approved parts. Refer to Page 44 for Replacement Parts. Refer to Figure 84 and previous instructions for removal of the damaged glass frame.

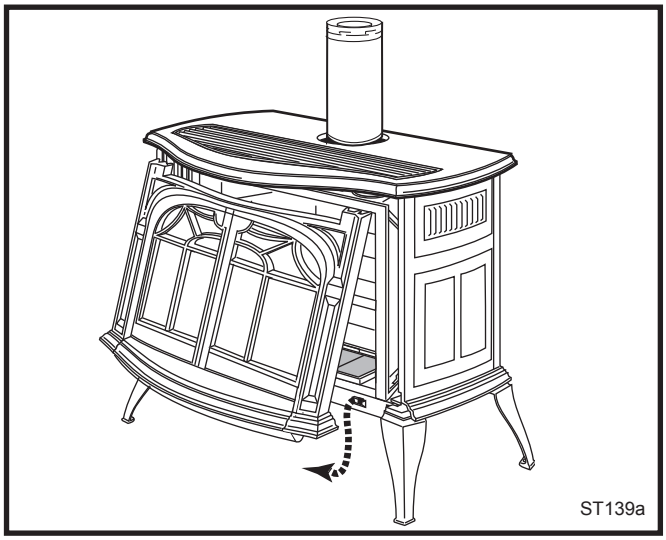

Fig. 84 Remove the Stove Front.

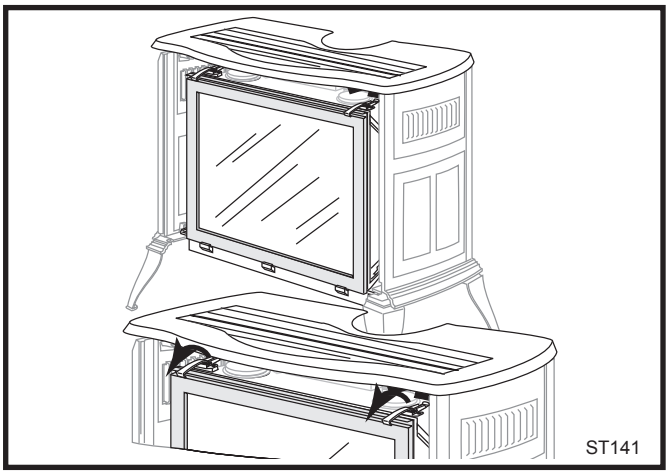

Fig. 85 Release the latches to remove the glass frame.

Gasket Replacement

The Radiance Gas Heater uses a 'tadpole' type gasket to seal between the glass panel and the frame. In time, this gasket can become brittle and compressed and should be replaced. New gasket is available from your dealer.

Shut off the gas supply and allow the stove to cool. Wear safety goggles and a dust mask.

1. Remove the Front, Glass Frame and Glass Panel. (Figs. 83 & 84) Remove the old gasket. Use a razor blade to separate the glass and gasket from the frame, and to clean the glass of any remaining cement or bits of gasket. Use a cold chisel if necessary.
2. Determine the correct length of gasket by laying it out around the edge of the glass. Allow an extra 1 - 2" (25-50mm). Mark the spot to be cut. Use a utility knife.
3. Starting on a long edge, remove about 6" of the protective paper strip and apply the flat adhesive face of the gasket around the outside-facing edge of the panel. Continue around the panel, applying about 6" at a time and being careful to not stretch the material. Do not overlap the gasket ends. (Fig. 85)
4. Apply a thin bead of high temperature silicone rubber sealant along the inside corner of the glass frame, all around the perimeter. Place the flat gasketed side of the glass panel back into the steel frame. Pinch the rounded inside-facing gasket material to bulk it up.
5. Replace the glass frame and front panel as previously described.

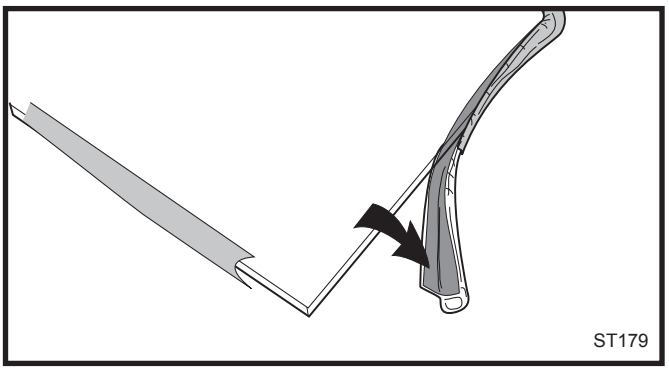

Fig. 86 Wrap the gasket material around the outside edge of the glass.

Inspect the Vent System Annually

Have the vent system inspected annually by a qualified technician. Shut off the main gas supply before inspecting the system. Both the inner exhaust pipe and the outer combustion supply pipe must be checked to confirm that they are unblocked and in good condition.

Check the Gas Flame Regularly

To ensure that the stove is operating properly, check the flames periodically to confirm they match Figure 86. The flames will be blue during the first 15-20 minutes of operation, and will gradually turn to yellow after that.

Do not use your stove if the flame pattern differs from that shown here. Contact your Vermont Castings dealer or a qualified technician for help.

Figure 87

Wiring Diagrams - RADVT

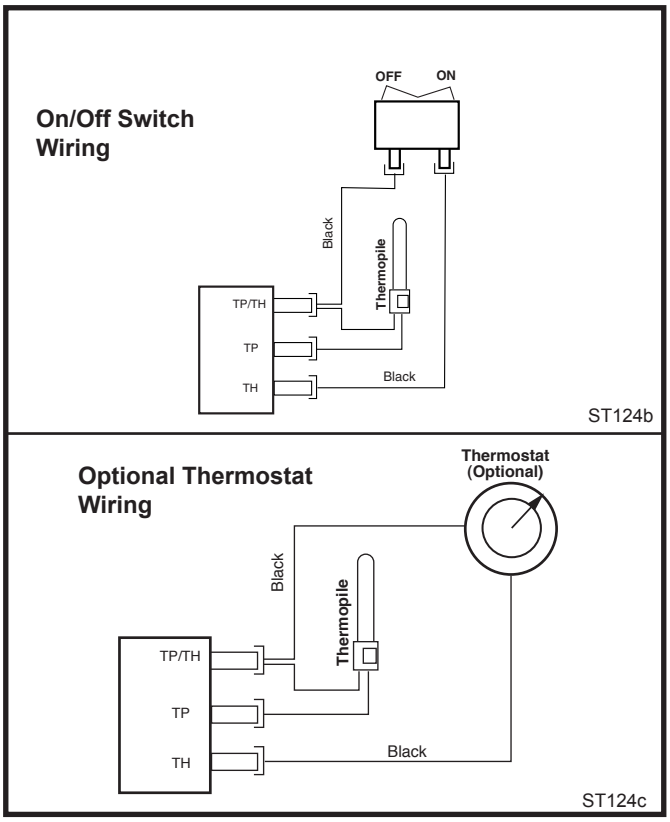

Fig. 88 On/off switch and optional thermostat circuit.

NOTE: IF ANY OF THE ORIGINAL WIRE, AS SUPPLIED WITH THE APPLIANCE, MUST BE REPLACED, IT MUST BE REPLACED WITH TYPE SF-2, 200°C WIRE OR ITS EQUIVALENT.

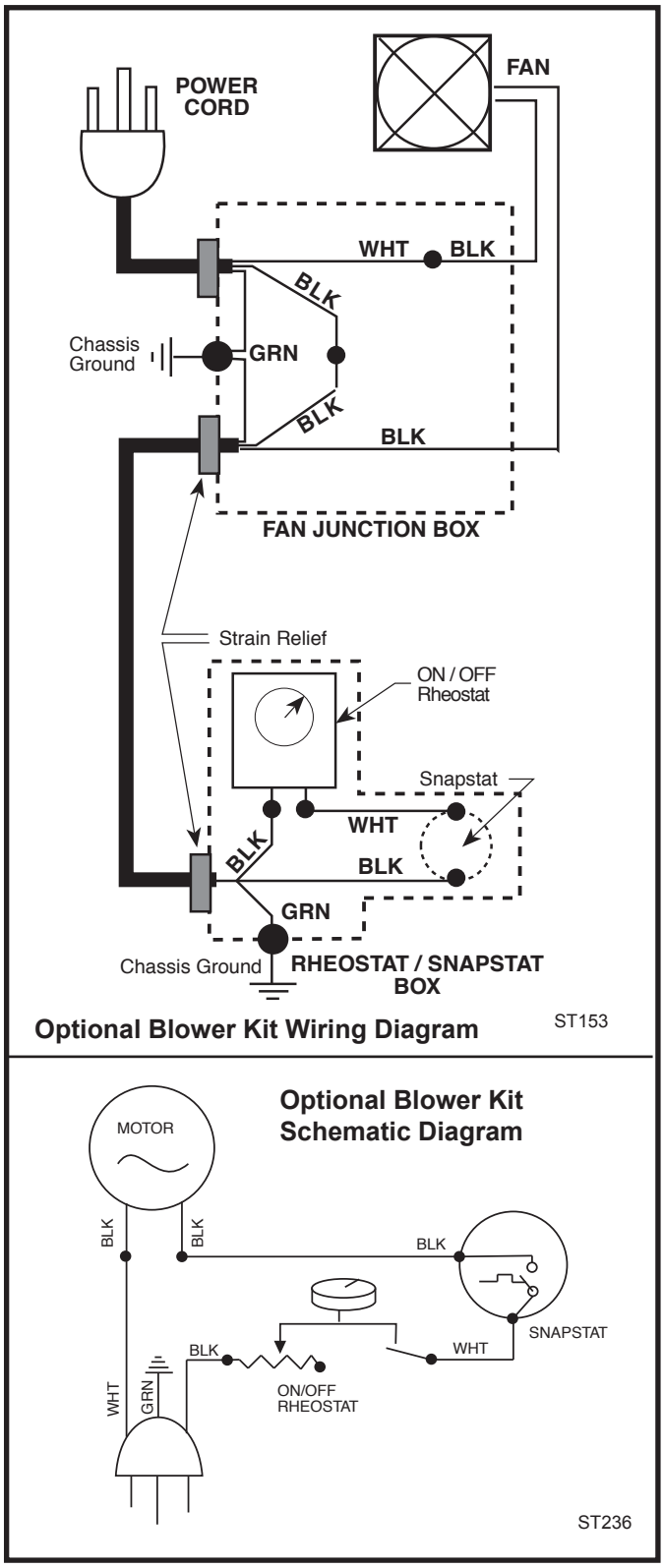

Fig. 89 Fan circuit.

Wiring Diagrams - RADVTCS

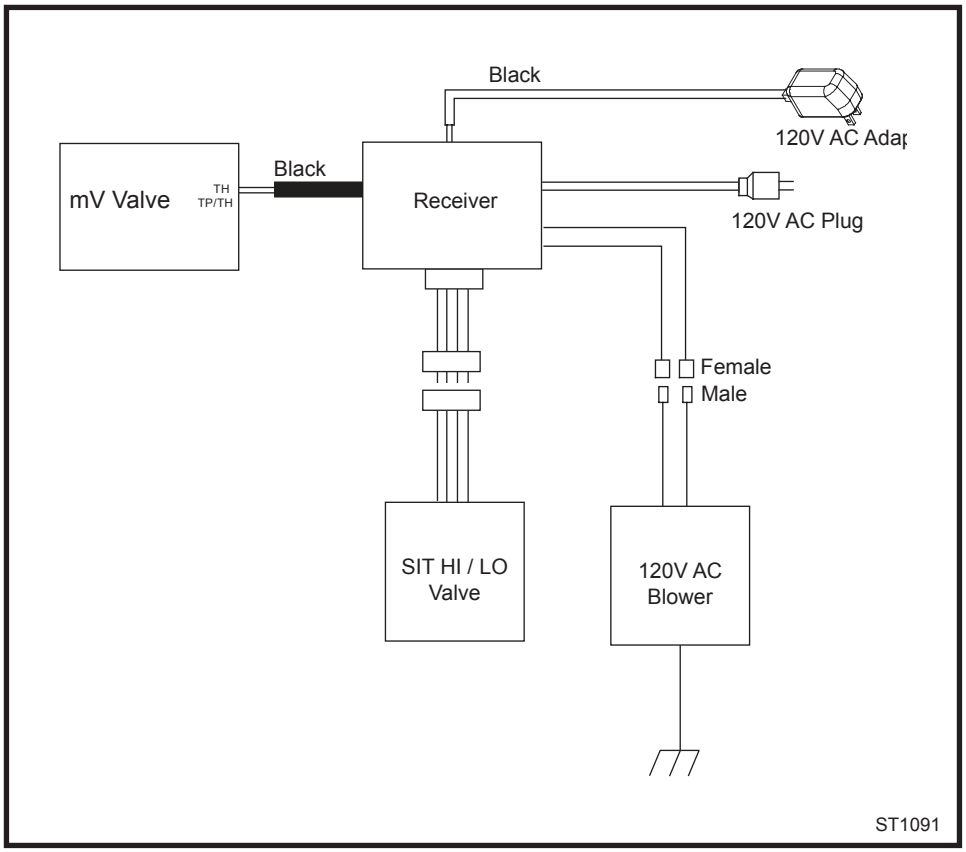

Fig. 90 SIT Hi/Lo blower schematic.

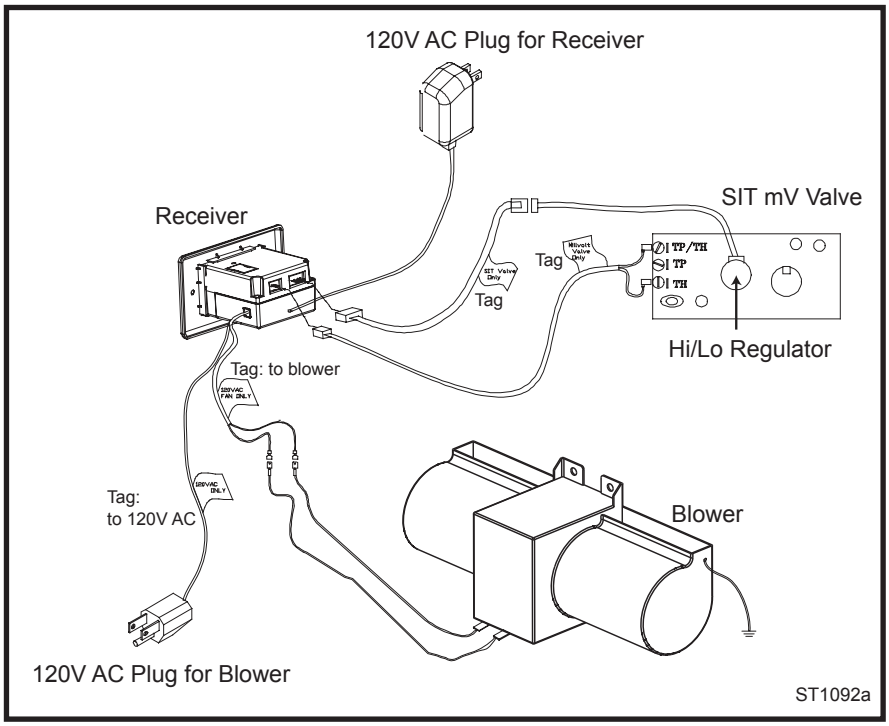

Fig. 91 SIT Hi/Lo blower wiring.

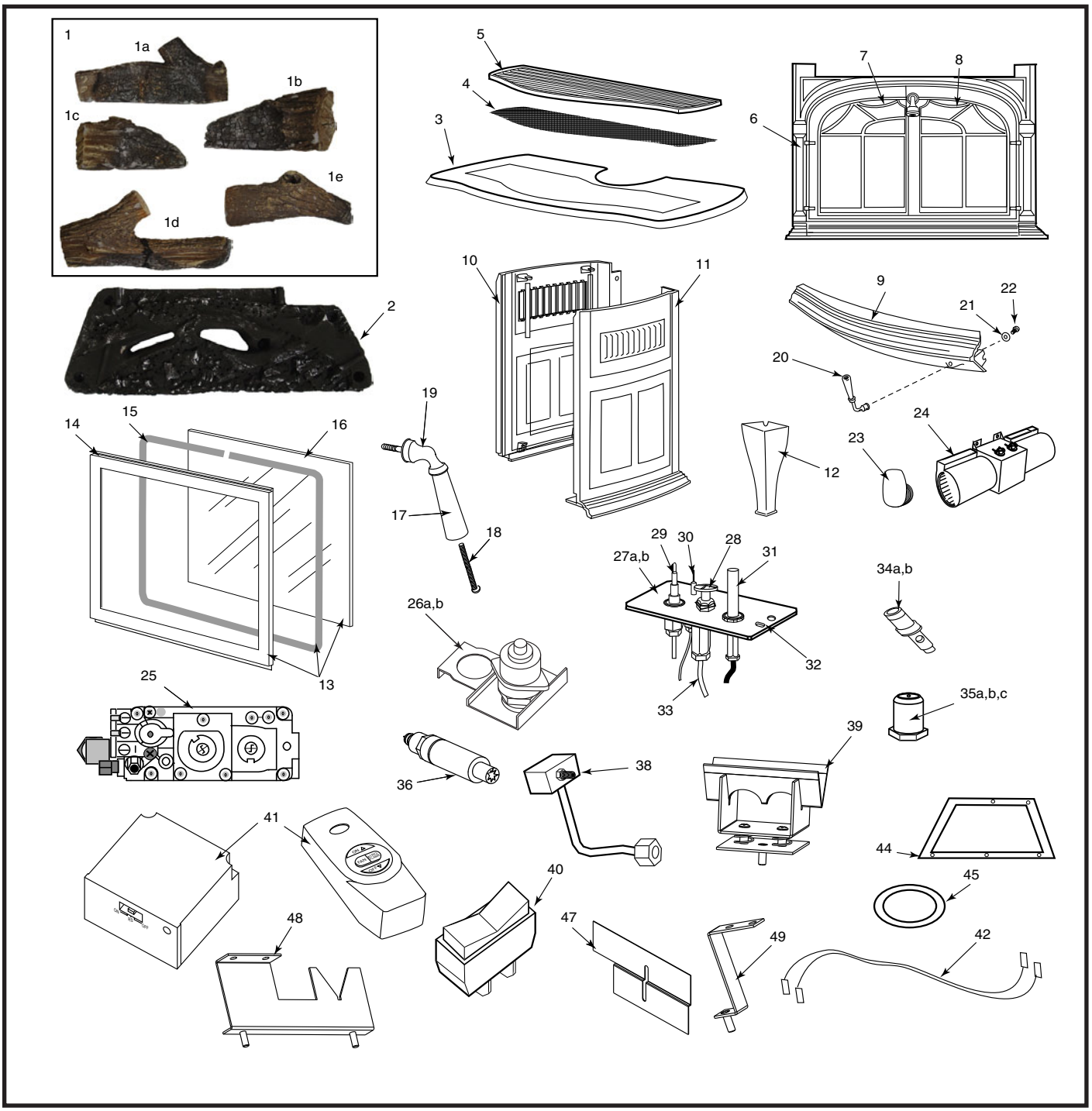

MHSC reserves the right to make changes in design, materials, specifications, prices and discontinue colors and products at any time, without notice.

Radiance Direct Vent Gas Heater

Models: RADVT Series: RADVTCB, RADVTEB, RADVTBS, RADVTBD, RADVTBM; RADVTCS Series: RADVTCSCB, RADVTCSEB, RADVTCSBS, RADVTCSBD, RADVTCSBM

Radiance Direct Vent Gas Heater (continued)

Models: Models: RADVT Series: RADVTCB, RADVTEB, RADVTBS, RADVTBD, RADVTBM; RADVTCS Series: RADVTCSCB, RADVTCSEB, RADVTCSBS, RADVTCSBD, RADVTCSBM

Ref.	Description	RADVT/RADVTCS
1.	Log Set - Complete	20012550
1a.	Log, Rear	20012541
1b.	Log, Right Front	20012543
1c.	Log, Left Front	20012542
1d.	Left Cross Log	20012544
1e.	Right Cross Log	20012545
2.	Ember Bed Assembly	20012206
3.	Top	Refer to Enamel Parts Chart
4.	Screen, Top	1601970
5.	Grille	1301195
6.	Front II	Refer to Enamel Parts Chart
7.	Door, Left	Refer to Enamel Parts Chart
8.	Door, Right	Refer to Enamel Parts Chart
9.	Control Door	Refer to Enamel Parts Chart
10.	Left End	Refer to Enamel Parts Chart
11.	Right End	Refer to Enamel Parts Chart
12.	Leg	Refer to Enamel Parts Chart
13.	Glass Frame Assembly	5003075
14.	Frame, Glass	1409112
15.	Gasket, Glass Med. Knit	1203702
16.	Glass, GFP Firebox	1601290
17.	Wood Handle	1600664
18.	Pan Hd, Sl 1/4-20 x 3-Z	1201310
19.	Brushed Nickel Insert	30002714
20.	Control Door Handle Assembly	30002730
21.	Washer, Flat 1/4 - Blk. 266 x .629.064	1202473
22.	CS, Hex Hd 1/4-20 x 5/8” - Blk	1201372
23.	Latch, Front Door	30001249
24.	Fan Blower (RADVTCS Series Only)	30005069
25.	Valve Nova SIT820.852	20012218
25a.	Valve SIT MV HI/LO 0.820.652 - Nat. (RADVTCS Series Only)	37D0117
26a.	Stepper Motor - Nat. (RADVTCS Series Only)	50D0099
26b.	Stepper Motor - LP (RADVTCS Series Only)	50D0100
27a.	Pilot Assembly 3Way N/DV RN 0.199.706	10002264
27b.	Pilot Assembly 3Way N/DV RP 0.199.703	10002265
28.	Pilot Top Convertible	10002266
29.	Thermocouple 24”	53373 7531137
30.	Electrode Ignitor w/ Cable SIT24	10001297
31.	Thermopile 18” RS	51827 7533113
32.	Nut Electrode SIT #0.974.144	57886
33.	Tubing Pilot w/ Fitting 1/8 x 24”	10001296
34a.	Pilot Orifice #62 - NG Top Convertible	37D0022
34b.	Pilot Orifice #35 - LP Top Convertible	37D0023
35a.	Orifice Hood 1.75 mm LP	20012946
35b.	Orifice Hood #31 (0.120”) Natural	20006927
35c.	Orifice - High Altitude #33 (0.113”) Natural	20012554
36.	Ignitor Piezo w/ Nut SIT	057958

Radiance Direct Vent Gas Heater (continued)

Models: Models: RADVT Series: RADVTCB, RADVTEB, RADVTBS, RADVTBD, RADVTBM; RADVTCS Series: RADVTCSCB, RADVTCSEB, RADVTCSBS, RADVTCSBD, RADVTCSBM

Ref.	Description	RADVT/RADVTCS
37.	Bracket Piezo Ignitor/Control (not shown)	20010876
38.	Manifold Assembly	20012202
39.	Air Shutter Assembly	20012204
40.	Trim ON/OFF Switch	30000874
41.	Remote Kit (Hi/Lo, Blower) (RADVTCS Series only)	RCSITEA
42.	Wire w/ Straight Term 2 End 50”	10002582
44.	Gasket Base Pan	20004287
45.	Gasket, HE Door	1203687
46.	Gasket Cement, 3 oz. Tube (not shown)	1206122
47.	Restrictor Plate	20013028
48.	Right Burner Support Assembly	20012443
49.	Tie Bracket Assembly	20012442
50.	Rear Shroud Assy. (RADVT Series Only)	20004194
50a.	Rear Shroud Assy. (RADVTCS Series Only)	20300123
51.	Bracket Igniter (not shown) (RADVTCS Series Only)	20300111

Fuel Conversion Kits

Conversion Kit, NG to LP - RADVTCS	Kit 20300165
Conversion Kit, NG to LP - RADVT	Kit 20012729
Conversion Kit, LP to NG - RADVTCS	Kit 20300166
Conversion Kit, LP to NG - RADVT	Kit 20012899

Radiance Direct Vent Gas Heater (continued)

Models: Models: RADVT Series: RADVTCB, RADVTEB, RADVTBS, RADVTBD, RADVTBM; RADVTCS Series: RADVTCSCB, RADVTCSEB, RADVTCSBS, RADVTCSBD, RADVTCSBM

Shell Enamel Parts - Radiance Direct Vent									
Enamel Color	Model	Top	Left End	Right End	Front	Left Door	Right Door	Control Door	Leg (4)
Classic Black	RADVTCB RADVTCSCB	1301194	30001751	30001752	30001376	30001378	30001377	30001413	30001753
Biscuit	RADVTBS RADVTCSBS	30003244	30003239	30003238	30003240	30003242	30003241	30003243	30003245
Bordeaux	RADVTBD RADVTCSBD	2321194	30001771	30001770	30001416	30001418	30001417	30001419	30001772
Brown Majolica	RADVTBM RADVTCSBM	30004933	30004927	30004926	30004928	30004930	30004929	30004931	30004934
Ebony Black	RADVTEB RADVTCSEB	30003262	30003257	30003256	30003258	30003260	30003259	30003261	30003263

Optional Accessories

Fan Kits - RADVT Series

FK26 Fan

The FK26 fan helps distribute heated air from within the firebox out into the room. The fan is controlled by a snapstat that turns power on and off as the firebox temperature rises above and falls below a preset temperature. A rheostat provides for variable fan speeds. Used with standard millivolt models.

Specifications

115 Volt / 60Hz / .75 Amps

Maintenance

The fan itself does not require regular maintenance, however, periodic cleaning of the fan and the surrounding area is required.

Installation

Refer to Page 16 for installation instructions.

Remote Controls - RADVT

The remote control allows you to turn the heater on or off from anywhere in the room. Refer to Page 43 for wiring diagrams. These remote controls are for use with standard millivolt models.

Model	Functions Controlled
RCB,RCM, RCBE,WMTD	On/Off Remote
RCST,RCSTE,RCT, WWTD,RCSTEB, RCSITEA, RCSIT	ON/OFF Thermostat Remote
WT	Wall Thermostat
MVWS	Wall Switch

Screen Kit

An optional screen, R40SK, for use with the operable doors is available to allow the doors to be left in the open position.

Warming Shelf

Warming shelves add versatility to your stove; they can be used to keep foods warm at mealtime.

Model	Color
1560	Classic Black
1553	Brown Majolica
1555	Biscuit
1557	Ebony Black
1565	Bordeaux

The shelf installation is done in three stages. First you attach the shelf loosely to the stove, leaving the screws loose enough to allow final adjustments. Then, you position the shelf and adjust the brackets so the shelf fits correctly. Finally, you tighten the screws.

Refer to the instructions included with each warming shelf for complete installation procedures.

Decorative Rings

7” brass or charcoal gray rings are available to add a decorative touch to the exposed stove pipe.

Model	Description
7FSDRG/4	7” Charcoal Gray Rings (4)
7FSDRP/4	7” Polished Brass Rings (4)

LIMITED LIFETIME WARRANTY

PRODUCT COVERED BY THIS WARRANTY

All Vermont Castings brand gas stoves, gas inserts, and gas fireplaces installed in the United States of America or Canada.

LIMITED LIFETIME WARRANTY

MHSC warrants that all cast iron parts, the combustion chamber, ceramic burner, and heat exchanger of every Vermont Castings gas product will be free of defective material or workmanship during the period the product is owned by the original owner subject to proof of purchase and the conditions and limitations listed on this warranty document.

BASIC ONE-YEAR WARRANTY

MHSC warrants to the original owner that your new Vermont Castings Gas Appliance is free from defects in material or workmanship for a period of one year from the date of purchase, subject to the following conditions and limitations. Labor to replace these parts is covered for one year, reimbursed per our warranty service fee schedule.

COMPONENT WARRANTY LIMITATATIONS

PORCELAIN ENAMEL FINISHED PARTS: MHSC offers no warranty on chipping of enamel surfaces. Inspect all products prior to accepting them for any damage to the enamel. The salt air environment of coastal areas or a high humidity environment can be corrosive to the porcelain enamel finish. These conditions can cause rusting of the cast iron beneath the porcelain enamel finish, which will cause the finish to flake off. Color lot variations with parts and/or accessories can occur and are not covered by warranty.

GLASS: Glass is not warranted for breakage due to misuse or accident. Glass is not covered for discoloration or stains due to environmental issues, or improper cleaning and maintenance.

PLATED PARTS AND ACCESSORIES: Brass, nickel, and gold parts should be cleaned with Lemon oil only. Commercial cleaners cannot be used. Mortar mix and masonry cleaners corrode the brass finish. The MHSC will not be responsible for, nor will it warrant any brass parts which are damaged by external chemicals or down draft conditions.

ACCESSORIES: Unless otherwise noted, MHSC supplied accessories are covered for a period of one year.

GENERAL CONDITIONS AND LIMITATIONS

- This Vermont Castings product must be installed or serviced by a qualified installer, preferably NFI or WETT (Canada) certified, as prescribed by the local jurisdiction. It must be installed and operated at all times in accordance with the Installation and Operating instructions furnished with the product. Any alteration, willful abuse, accident, or misuse of the product shall nullify this warranty.
- This warranty is non-transferable, and is made to the original owner, provided that the purchase was made through an authorized supplier of Vermont Castings branded MHSC products.
- Parts covered under the Limited Lifetime Warranty will be covered for the lifetime of the appliance up to a maximum of seven (7) years after MHSC discontinues the model. The maximum amount recoverable under this warranty is limited to the purchase price of the product and, if MHSC is unable to provide replacement or repair in an expedient and cost effective manner, MHSC may discharge all obligations under this warranty by refunding the purchase price of the product.
- Any labor and related repair charges relating to the cost and expenses of replacing or repairing defective components under the Limited Lifetime Warranty are not covered, except as provided for under the Basic One-Year Warranty.
- Any part or component replaced under the provisions of this warranty is covered for six months or the remainder of the original warranty, whichever is longest.
- Any installation, labor, construction, transportation, or other related costs/expenses arising from defective part(s), repair, replacement, or otherwise of same, will not be covered by this warranty, nor shall the Company assume responsibility for same. **IN NO EVENT SHALL MHSC BE LIABLE FOR ANY INCIDENTAL OR CONSEQUENTIAL DAMAGES CAUSED BY DEFECTS IN THE PRODUCT except as provided by law**
- SOME STATES DO NOT ALLOW FOR THE EXCLUSION OR LIMITATIONS OF INCIDENTAL AND CONSEQUENTIAL DAMAGES OR LIMITATIONS ON HOW LONG AN IMPLIED WARRANTY LASTS, SO THE ABOVE LIMITATIONS MAY NOT APPLY TO YOUR CIRCUMSTANCES. THIS WARRANTY GIVES YOU SPECIFIC RIGHTS AND YOU MAY HAVE OTHER RIGHTS WHICH VARY FROM STATE TO STATE.
- All other warranties expressed or implied with respect to the product, its components and accessories, or any obligations/liabilities on the part of the Company are hereby expressly excluded.
- The Company neither assumes, nor authorizes any third party to assume on its behalf, any other liabilities with respect to the sale of this Vermont Castings product
- The warranties as outlined within this document do not apply to chimney components or other non MHSC accessories used in conjunction with the installation of this product.
- Damage to the unit while in transit is not covered by this warranty but is subject to claim against the common carrier. Contact the dealer from whom you purchased your fireplace/stove (do not operate the appliance as this might negate the ability to process the claim with the carrier).
- The Company will not be responsible for:

a) Down drafts or spillage caused by environmental conditions such as near-by trees, buildings, roof tops, hills, or mountains.

b) Inadequate ventilation or negative air pressure caused by mechanical systems such as furnaces, fans, clothes dryers, etc.

- This warranty is void if:

a) The fireplace has been operated in atmospheres contaminated by chlorine, fluorine, or other damaging chemicals.

b) The fireplace has been subjected to prolonged periods of dampness or condensation

c) Any damages to the fireplace, combustion chamber, heat exchanger or other components due to water, or weather damage, which is the result of but not limited to, improper chimney/venting installation.

d) Any alteration, willful abuse, accident, or misuse of the product has occurred.

IF WARRANTY SERVICE IS NEEDED...

Contact your installing Vermont Castings dealer. Make sure you have your warranty, your sales receipt, the model number and serial number of your MHSC product. If you're the installing dealer is unknown or unable to provide necessary parts or service, a list of Authorized Vermont Casting dealers can be located on the internet at www.vermontcastings.com

NATIONAL FIREPLACE INSTITUTE®

NFI

CERTIFIED

www.nficertified.org

We recommend that our gas hearth products be installed and serviced by professionals who are certified in the U.S. by the National Fireplace Institute® (NFI) as NFI Gas Specialists.

MHSC

149 Cleveland Drive • Paris, Kentucky 40361

www.mhsc.com