This Owner's Manual is provided and hosted by Appliance Factory Parts.

Appliance Factory Parts
Experts in BBQ, Humidifier, & Appliance Parts
1-800-955-7075

Vermont Castings INTREPID INDVRBM Owner's Manual

Shop genuine replacement parts for Vermont Castings INTREPID INDVRBM

Find Your Vermont Castings Wood or Gas Stove Parts - Select From 53 Models

-------- Manual continues below --------

INSTALLER / CONSUMER SAFETY INFORMATION

PLEASE READ THIS MANUAL BEFORE INSTALLING AND USING APPLIANCE.

WARNING!
IF THE INFORMATION IN THIS MANUAL IS NOT FOLLOWED EXACTLY, A FIRE OR EXPLOSION MAY RESULT CAUSING PROPERTY DAMAGE, PERSONAL INJURY OR LOSS OF LIFE.

—Do not store or use gasoline or other flammable vapors and liquids in the vicinity of this or any other appliance.

—WHAT TO DO IF YOU SMELL GAS:

- **Do not try to light any appliance.**
- **Do not touch any electric switch; do not use any phone in your building.**
- **Immediately call your gas supplier from your neighbor's phone. Follow the gas supplier's instructions.**
- **If you cannot reach your gas supplier, call the fire department.**

Installation and service must be performed by a qualified installer, service agency or the gas supplier.

This appliance may be installed in an after market permanently located manufactured (mobile) home where not prohibited by local codes.

This appliance is only for use with the type of gas indicated on the rating plate.

This appliance is not convertible for use with other gases unless a certified kit is used.

VERMONT CASTINGS

Intrepid® Direct Vent, Rear Vent Gas Heater

Models:
INDVRCB, INDVREB, INDVRMB, INDVRBS, INDVRCH, INDVRVG, INDVRBD, INDVRBB, INDVRCG, INDVRGG, INDVRSG, INDVRBM

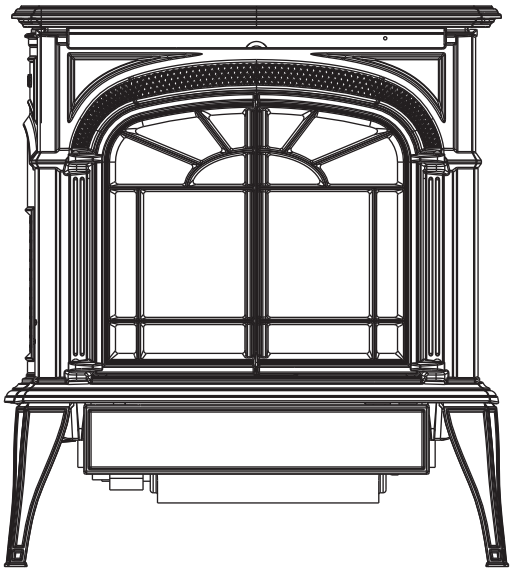

Homeowner's Installation and Operating Manual

DESIGN CERTIFIED

CERTIFIED

INSTALLER: Leave this manual with the appliance.
CONSUMER: Retain this manual for future reference.

20012761 9/10 Rev. 8

Table of Contents

PLEASE READ THE INSTALLATION & OPERATING INSTRUCTIONS BEFORE USING APPLIANCE.
Thank you and congratulations on your purchase of a Vermont Castings stove.
IMPORTANT: Read all instructions and warnings carefully before starting installation. Failure to follow these instructions may result in a possible fire hazard and will void the warranty.

Installation & Operating Instructions
General Information....3
Requirements for the Commonwealth of Massachusetts....4
Stove Dimensions....5
Installation Requirements....6
Locating the Stove....6
Clearance Requirements....6
Minimum Clearances, Parallel Installation, Corner Installation....7
Wall and Ceiling Clearances....7
Mantel Clearances....7
Hearth Requirements....7
Gas Specifications....8
Air Shutter Setting....8
Gas Inlet and Manifold Pressures....8
High Elevations....8
Horizontal Termination....8
Vertical Termination....9
Restrictor Plate Adjustment for Extended Pipe Runs....9
Vent Termination Clearances....10
General Venting Information - Termination Location....11
Termination Clearances....12

Installation
Install Optional FK20 Fan Kit....13
Venting System Components....14
Venting System Assembly, General Information, Options, Planning....15
Rear Vent....16
Horizontal Installation....17
Vertical Installation....19
Cathedral Ceiling Installation....21
General Maintenance....22
Supplemental Canadian Instructions....22
Vertical Through Existing Chimney....22
Converting a Class-A Metal Chimney or Masonry Chimney to a Direct Vent System....25
Connect Gas Supply Line....27
Burner Information....28
Complete the Assembly....28
Install ON/OFF Switch....28
Install the Front Plate....28
Thermostat Connection....28
Install the Log Set....29

Operation
Your First Fire....30
Pilot and Burner Inspection....30
Flame & Temperature Adjustment....30
Flame Characteristics....31
Lighting and Operating Instructions....32
Troubleshooting....33
Fuel Conversion Instructions....34

Maintenance
Annual System Inspection....37
Logset and Burner Cleaning....37
Care of Cast Iron....37
Cleaning the Glass....37
Glass Replacement....37
Gasket Replacement....38
Inspect the Vent System Annually....38
Check the Gas Flame Regularly....38
Stove Disassembly....38
Wiring Diagrams....39

Replacement Parts....40
Optional Accessories....41
Warranty....47
Energuide....48

Installation & Operating Instructions

The Intrepid Direct Vent room Heater, Models: INDVRCB, INDVREB, INDVRMB, INDVRBS, INDVRCH, INDVRVG, INDVRBD, INDVRBB, INDVRCG, INDVRGG, INDVRSG, INDVRBM is a vented gas appliances listed to ANSI Standard Z21.88-2005 and CSA-2.33-2005 for Vented Room Heaters, and CSA 2.17-M91, Gas-Fired Appliances For Use at High Altitudes.

The installation of the Intrepid Direct Vent Room Heater must conform with local codes, or in the absence of local codes, with National Fuel Gas Code, ANSI Z223.1/NFPA 54 — latest edition and CSA B-149.1 (EXCEPTION: Do not derate this appliance for altitude. Maintain the manifold pressure at 3.5" w.c. for Natural Gas and 10" w.c. for LP gas at maximum input.) Refer to Page 7 (RF only).

This appliance is only for use with the type of gas indicated on the rating plate. This appliance is not convertible for use with other gases unless a certified kit is used.

Installation and replacement of gas piping, gas utilization equipment or accessories, and repair and servicing of equipment shall be performed only by a qualified agency, preferably NFI or WETT (Canada) certified. The term "qualified agency" means any individual, firm, corporation, or company that either in person or through a representative is engaged in and is responsible for (a) installation or replacement of gas piping, or (b), the connection, installation, repair, or servicing of equipment, who is experienced in such work, familiar with all precautions required, and has complied with all the requirements of the authority having jurisdiction.

The Intrepid Direct Vent Room Heater should be inspected before use and at least annually by a qualified service agency. It is imperative that control compartments, burners, and circulating air passageways of the appliance be kept clean.

The Intrepid Direct Vent Room Heater and the individual shut-off valve must be disconnected from the gas supply piping during any pressure testing of that system at test pressures in excess of 1/2 psig (3.5 kPa).

The Intrepid Direct Vent Room Heater must be isolated from the gas supply piping system by closing the individual manual shutoff valve during any pressure testing of the gas supply piping system at test pressures equal to or less than 1/2 psig.

An accessible tap is located above the pilot/on-off knob for checking the inlet pressure.

'Direct Vent' describes a sealed combustion system in which incoming outside air for combustion and outgoing exhaust enter and exit through two separate concentric passages within the same sealed vent system. The system does not use room air to support combustion. The Direct Vent system permits the gas appliance to be vented directly to the outside atmosphere through the side of the house or vertically through the roof.

This appliance is approved for bedroom installations in the U.S. and Canada.

This appliance may be installed in an aftermarket* manufactured (mobile) home, where not prohibited by state or local codes.

WARNING: Operation of this heater when not connected to a properly installed and maintained venting system can result in carbon monoxide (CO) poisoning and possible death.

The Intrepid Direct Vent Room Heater, when installed, must be electrically grounded in accordance with local codes or, in the absence of local codes, with the National Electrical Code ANSI/NFPA 70, (latest edition), or of the current Canadian Electrical Code C22.1.

Due to high temperatures this appliance should be located out of traffic and away from furniture and draperies.

WARNING: This appliance is hot while in operation. Keep children, clothing, and furniture away. Contact may cause burns or ignition of combustible materials.

Children and adults should be alerted to the hazards of high surface temperatures and should stay away to avoid burns or clothing ignition. Young children should be carefully supervised when they are in the same room as the appliance.

Clothing or other flammable materials should not be placed on or near the appliance.

Any safety screen, glass or guard removed for servicing an appliance must be replaced prior to operating the appliance.

The appliance area must be kept clear and free from combustible materials, gasoline, and other flammable vapors and liquids.

The flow of combustion and ventilation air must not be obstructed. The installation must include adequate accessibility and clearance for servicing and proper operation.

WARNING: Do not operate the Room Heater with the glass panel removed, cracked or broken. Replacement of the panel should be done by a licensed or qualified service person.

Do not use this appliance if any part has been under water. Immediately call a qualified service technician to inspect the appliance and to replace any part of the control system and any gas control which has been under water.

Do not burn wood, trash or any other material for which this appliance was not designed. This appliance is designed to burn either natural gas or propane only.

This gas appliance must not be connected to a chimney flue serving a separate solid-fuel burning appliance.

CAUTION: Label all wires prior to disconnection when servicing controls. Wiring errors can cause improper and dangerous operation.

Verify proper operation after servicing.

* ***Aftermarket:*** *Completion of sale, nor for purpose of resale, from the manufacturer.*

Intrepid
Direct Vent / Rear Vent
Certified to:

ANSI Z21.88b-2008 / CSA Z2.33b-2008
Vented Gas Fireplace Heaters

Proposition 65 Warning: Fuels used in gas, woodburning or oil fired appliances, and the products of combustion of such fuels, contain chemicals known to the State of California to cause cancer, birth defects and other reproductive harm.
California Health & Safety Code Sec. 25249.6

Installation & Operating Instructions

Requirements for the Commonwealth of Massachusetts

All gas fitting and installation of this heater shall only be done by a licensed gas fitter or licensed plumber.

For all side wall horizontally vented gas fueled equipment installed in every dwelling, building or structure used in whole or in part for residential purposes, including those owned or operated by the Commonwealth and where the side wall exhaust vent termination is less than seven (7) feet above finished grade in the area of the venting, including but not limited to decks and porches, the following requirements shall be satisfied:

Installation of Carbon Monoxide Detectors

At the time of installation of the side wall horizontal vented gas fueled equipment, the installing plumber or gas fitter shall observe that a hard wired carbon monoxide detector with an alarm is installed on each additional level of the dwelling, building or structure served by the side wall horizontally vented gas fueled equipment. It shall be the responsibility of the property owner to secure the services of qualified licensed professionals for the installation of hard wired carbon monoxide detectors.

In the event that the side wall horizontally vented gas fueled equipment is installed in a crawl space or an attic, the hard wired carbon monoxide detector with alarm and battery back-up may be installed on the next adjacent floor level.

In the event that the requirements of this subdivision can not be met at the time of completion of installation, the owner shall have a period of thirty (30) days to comply with the above requirements; provided, however, that during said thirty (30) day period, a battery operated carbon monoxide detector with an alarm shall be installed.

Approved Carbon Monoxide Detectors

Each carbon monoxide detector as required in accordance with the above provisions shall comply with NFPA 720 and ANSI/UL 2034 listed and IAS certified.

Signage

A metal or plastic identification plate shall be permanently mounted to the exterior of the building at a minimum height of eight (8) feet above grade directly in line with the exhaust vent terminal for the horizontally vented gas fueled heating appliance or equipment. The sign shall read, in print size no less than one-half (1/2) inch in size, **“GAS VENT DIRECTLY BELOW, KEEP CLEAR OF ALL OBSTRUCTIONS”.**

Inspection

The state or local gas inspector of the side wall horizontally vented gas fueled equipment shall not approve the installation unless, upon inspection, the inspector observes carbon monoxide detectors and signage installed in accordance with the provisions of 248 CMR 5.08(2)(a)1 through 4.

Exemptions

The following equipment is exempt from 248 CMR 5.08(2)(a)1 through 4:

- The equipment listed in Chapter 10 entitled “Equipment Not Required To Be Vented” in the most current edition of NFPA 54 as adopted by the Board; and
- Product Approved side wall horizontally vented gas fueled equipment installed in a room or structure separate from the dwelling, building or structure used in whole or in part for residential purposes.

MANUFACTURER REQUIREMENTS

Gas Equipment Venting System Provided

When the manufacturer of Product Approved side wall horizontally vented gas equipment provides a venting system design or venting system components with the equipment, the instructions provided by the manufacturer for installation of the equipment and the venting system shall include:

- Detailed instructions for the installation of the venting system design or the venting system components; and
- A complete parts list for the venting system design or venting system.

Gas Equipment Venting System NOT Provided

When the manufacturer of a Product Approved side wall horizontally vented gas fueled equipment does not provide the parts for venting the flue gases, but identifies “special venting systems”, the following requirements shall be satisfied by the manufacturer:

- The referenced “special venting system” instructions shall be included with the appliance or equipment installation instructions; and
- The “special venting systems” shall be Product Approved by the Board, and the instructions for that system shall include a parts list and detailed installation instructions.

A copy of all installation instructions for all Product Approved side wall horizontally vented gas fueled equipment, all venting instructions, all parts lists for venting instructions, and/or all venting design instructions shall remain with the appliance or equipment at the completion of the installation.

Stove Dimensions - Intrepid Direct Vent Gas Heater

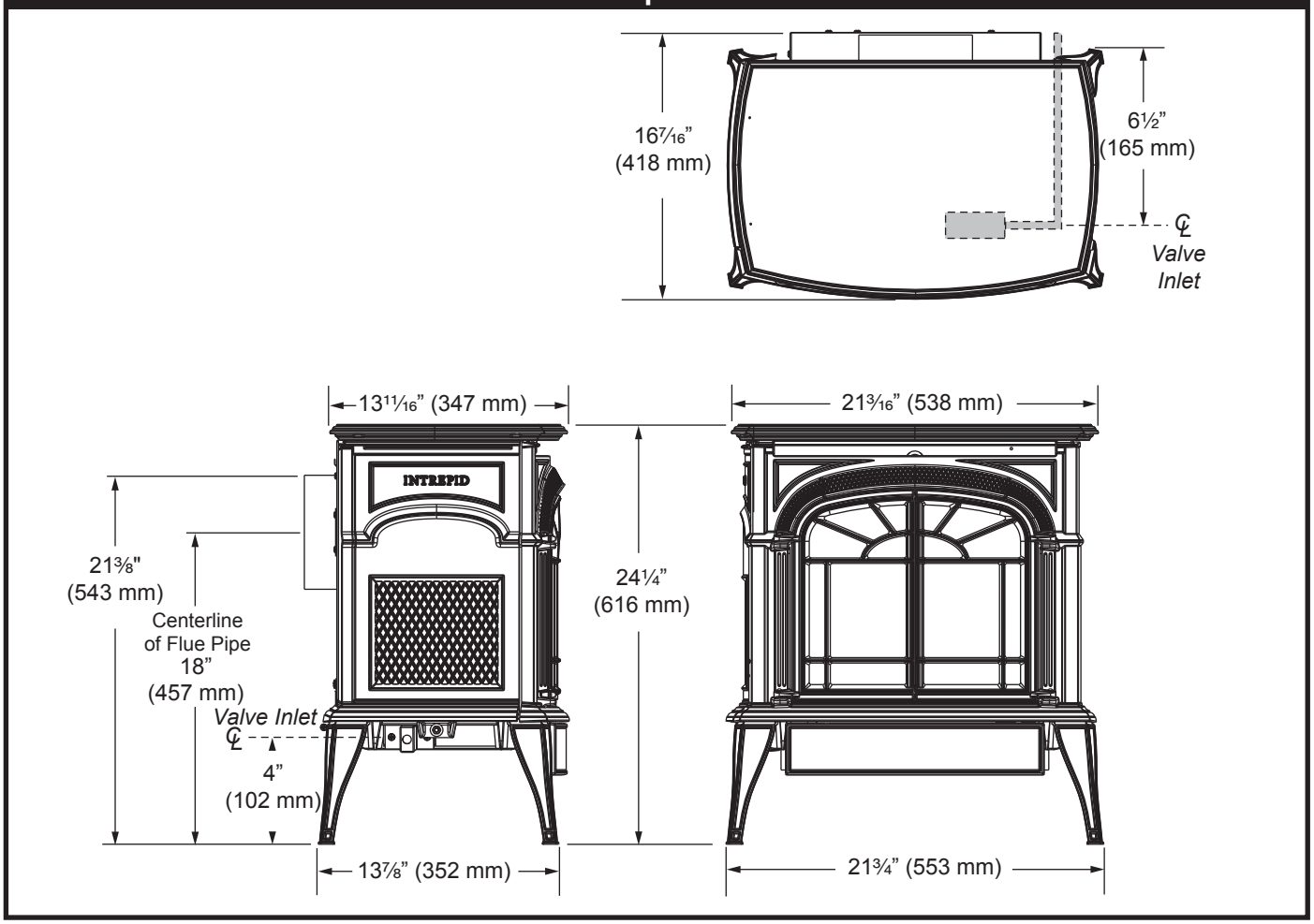

Fig. 1 Intrepid dimensions.

Installation Requirements

The installation must conform with local codes or, in the absence of local codes, with the National Fuel Gas Code, ANSI Z223.1/NFPA 54 - latest edition. (EXCEPTION: Do not derate this appliance for altitude. Maintain the manifold pressure at 3.5 inches w.c. for Natural Gas, and 10 inches w.c. for Propane).

In Canada, installation must be in accordance with the current CSA B-149.1 Installation Codes and/or local codes.

The installation should be done by a qualified service person who is familiar with the building codes and installation techniques appropriate for your area to accomplish a safe and effective installation.

Your dealer or your local gas supplier will be able to refer a qualified service person.

WARNING: Due to high temperatures, the HEATER should be located out of traffic and away from furniture and draperies.

The surface of the Heater is hot when it is in use. Young children should be watched carefully when they are in the same room when the Heater is in use, and they should be taught to avoid the hot surface. Keep any objects that can burn well away from the Heater, and observe the recommended clearances that follow.

WARNING

HOT GLASS WILL CAUSE BURNS.

DO NOT TOUCH GLASS UNTIL COOLED.

NEVER ALLOW CHILDREN TO TOUCH GLASS.

Locating the Stove

In choosing a location for the stove, consider:

- The location of outside walls;
- Where additional heat is needed:
- Where family members gather most often;
- The vent system requirements.

NOTE: We do not recommend the use of wallpaper next to this stove. Over time, radiant heat may cause the wallpaper to shrink, or may adversely affect the binders in the wallpaper adhesive.

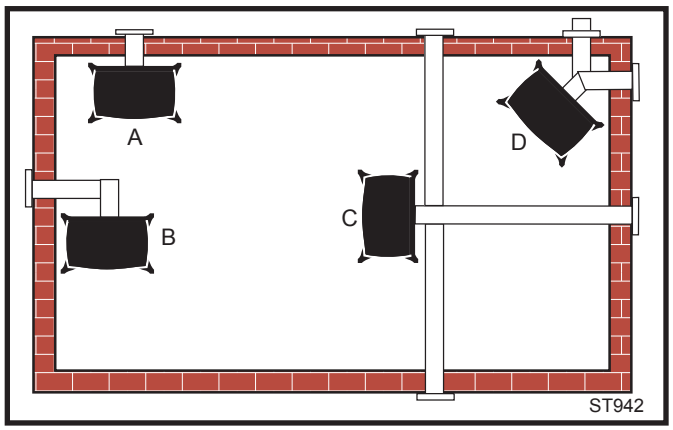

Fig. 2 Possible stove locations.

Clearance Requirements

Minimum Clearances to Combustible Materials

Measure side clearances as shown in Figures 3, 4 and 5 from the outer edge of the cast iron stove top. Measure rear clearances from the outermost surface of the steel rear skirt.

This heater is approved for installation into an alcove constructed of combustible materials to the dimensions and clearances shown on the next page.

The same clearances apply in a standard parallel installation.

WARNING:

- **Always maintain required clearances (air spaces) to nearby combustibles to prevent fire hazard. Do not fill air spaces with insulation. All venting components must maintain a 1" (25 mm) clearance to combustible materials. Maintain a 6" (152 mm) clearance when using single wall pipe. Maintain a 2" (51 mm) clearance on top and 1" (25 mm) on sides and bottom when venting straight off the rear.**
- **The gas appliance and vent system must be vented directly to the outside of the building and never be attached to a chimney serving a separate solid fuel or gas-burning appliance.**
- **Refer to the manufacturer's instructions included with the venting system for complete installation procedures.**

Parallel Installation: Minimum Clearance and Flue Centerline

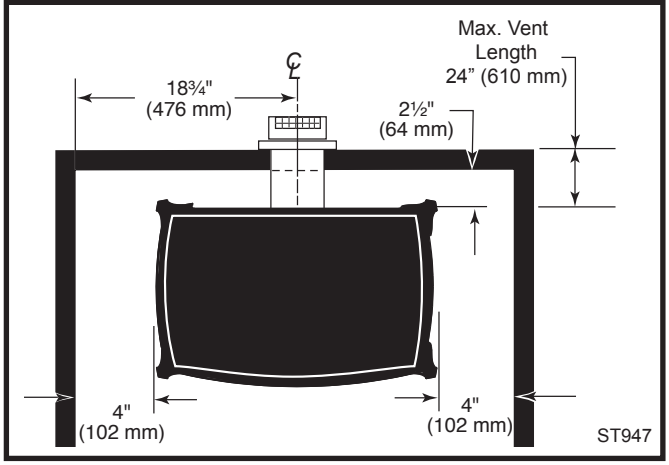

Fig. 3 Parallel Installation, minimum back and side clearance.

Corner Installation: Minimum Clearance and Flue Centerline

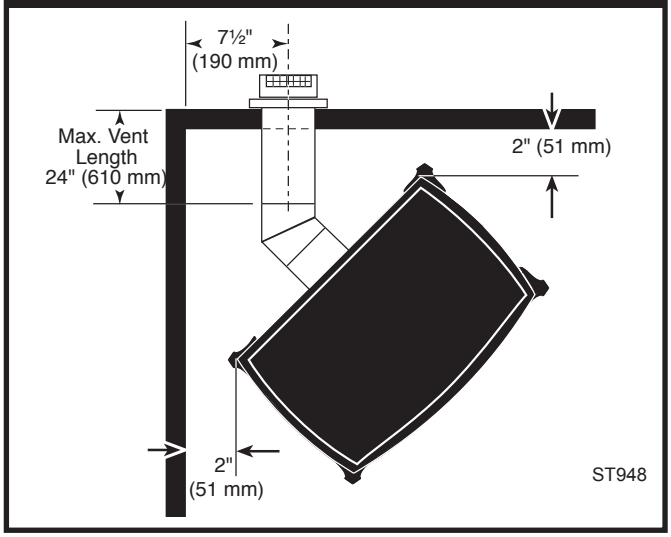

Fig. 4 Corner installation, minimum corner clearance and flue centerline.

Wall and Ceiling Clearances

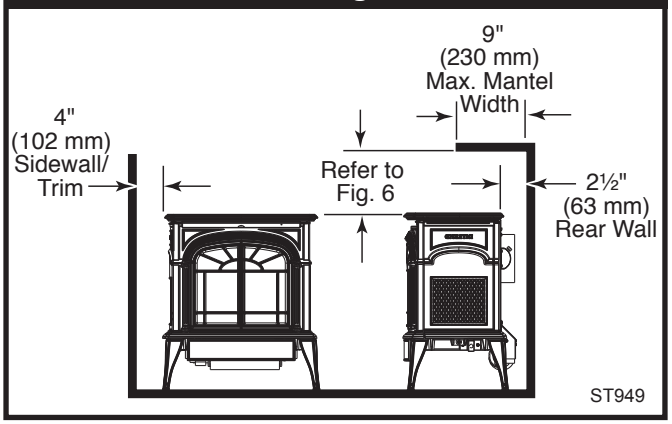

Fig. 5 Alcove and ceiling clearances.

Mantel Clearances

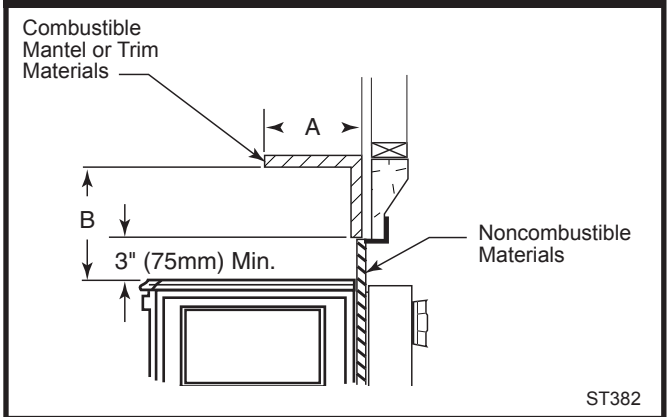

A (Max.)	B (Min.)
9” (230 mm)	10½” (270 mm)
7½” (190 mm)	9” (230 mm)
6” (152 mm)	7½” (190 mm)
4½” (114 mm)	6” (152 mm)
3” (76 mm)	4½” (114 mm)
1½” (38 mm)	3” (76 mm)

A = Depth of Mantel and/or Top Trim
B = Height from Top of Heater

Fig. 6 Mantel / top trim clearances.

Hearth Requirements

The Intrepid Heater must be installed on rigid flooring. When the heater is installed directly on any combustible surface other than wood flooring, a metal or wood panel extending the full width and depth of the unit must be used as the hearth. There are no other hearth requirements.

Gas Specifications

Model	Fuel	Gas Control	Max. Input BTU/h	Min. Input BTU/h
INDVR Series	Nat	Millivolt	18,500	12,500
INDVR Series	Prop	Millivolt	16,000	12,000

Air Shutter Setting
Minimum injector air inlet opening

Model	Natural Gas	LP
INDVR	1/2” Open	1/2” Open

Weight: Fully assembled 350 lbs.

Gas Inlet and Manifold Pressures

	Natural	LP (Propane)
Inlet Minimum	5.5” w.c.	11.0” w.c.
Inlet Maximum	14.0” w.c.	14.0” w.c.
Manifold Pressure	3.5” w.c.	10” w.c.

The installation must conform with local codes or, in the absence of local codes, with the National Fuel Gas Code, ANSI Z223.1/NFPA 54 - latest edition. (EXCEPTION: Do not derate this appliance for altitude. Maintain the manifold pressure at 3.5” w.c. for Natural Gas and 10” w.c. for Propane.)

High Elevations

Input ratings are shown in BTU per hour and are certified without deration for elevations up to 4,500 feet (1,370m) above sea level.

For elevations above 4,500 feet (1,370m) in USA, installations must be in accordance with the current ANSI Z223.1/NFPA 54 and/or local codes having jurisdiction.

In Canada, please consult provincial and/or local authorities having jurisdiction for installations at elevations above 4,500 feet (1,370m).

WARNING: Improper installation, adjustment, alteration, service or maintenance can cause injury or property damage. Refer to this manual for correct installation and operational procedures. For assistance or additional information consult a qualified installer, service agency, or the gas supplier.

Horizontal Termination

Except for straight-through the wall vent installations.

The vent must rise vertically a minimum of 24” (610mm) after the first elbow directly off the back of the unit, before the next elbow. The horizontal run may extend up to 20’ (6m) and include a vertical rise of up to 40’ (12m). (Fig. 7) Horizontal termination must also meet the criteria shown in Figures 11 and 12.

- Approved vent systems must terminate above and including the heavy line in Figure 7.
- Two 45° elbows may be substituted for each single 90□ elbow.
- With a rise between 2’ - 5’, one 90° or two 45° elbows may be used (Excluding the first elbow directly off the back of the unit.

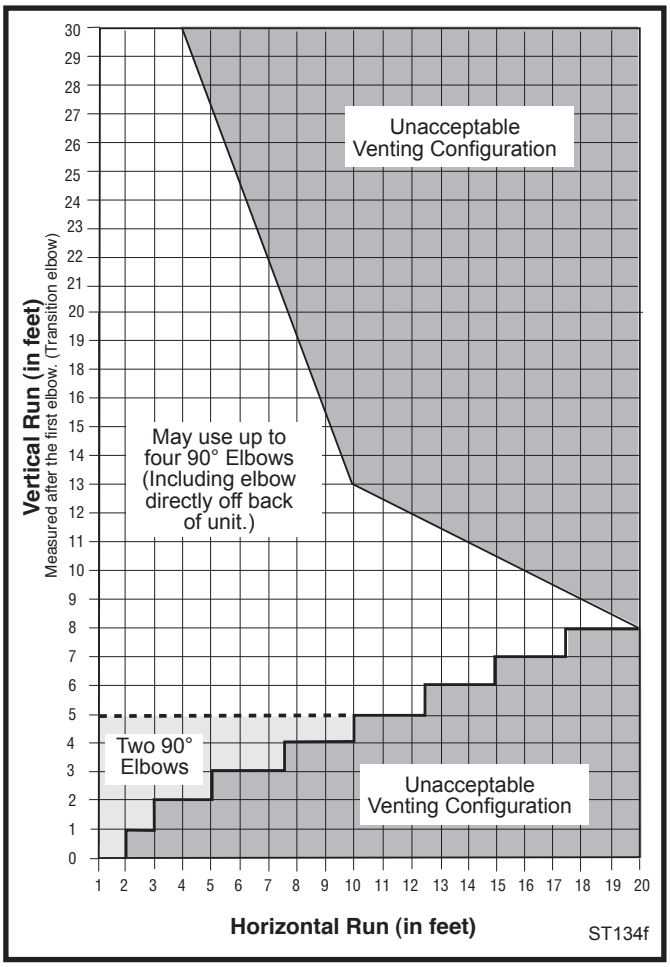

Fig. 7 Horizontal vent termination window.

Vertical Termination

A vertical vent system must terminate no less than 8' (2.44 m) and no more than 40' (12 m) above the appliance flue collar. A restrictor plate (supplied) must be used (where specified) in all vertically terminated vent systems. **NOTE: The restrictor plate supplied with the vertical termination kit should be discarded. Install restrictor plate according to recommendations in Figure 10.** A vertically terminated vent system must also conform to the following criteria:

- No more than three 90° elbows may be used.
- Two 45° elbows may be substituted for one 90° elbow. No more than six elbows may be used.
- Vent must rise a minimum of 2 feet before offset is used.
- Termination height must conform to roof clearance as specified in Figure 11.

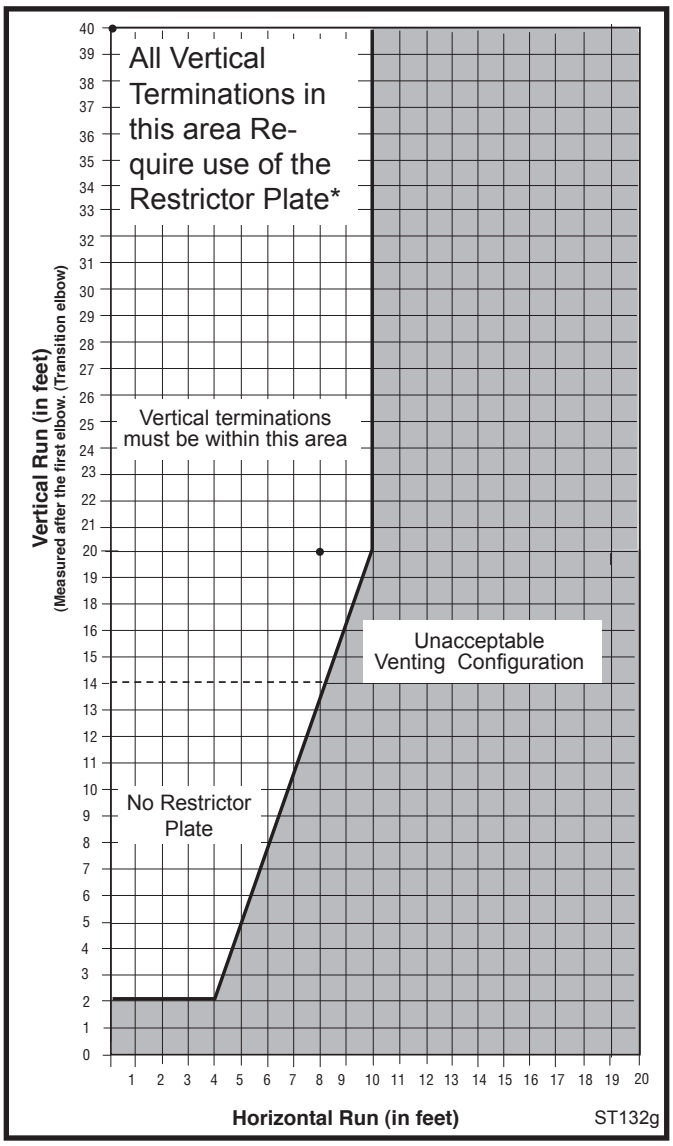

Fig. 8 Vertical vent termination window.

Restrictor Plate Adjustment for Extended Pipe Runs

This stove is shipped with a restrictor plate in the Parts Bag. Adjustments can be made by loosening the adjustment screw to allow the restrictor plate to slide up or down. (Fig. 9) A guide for usage is shown in Figure 10.

NOTE: Some installations may require some adjustment by the installer for optimum flame appearance. Optimum flame appearance is a flame that is not subject to tall, dirty yellow flames producing soot or flames lifting off of the ember bed ports.

Restrictor Plate Adjustment

1. Remove the logs if installed.
2. Remove the adjustment screw in the back wall of the firebox.
3. Install restrictor plate as shown in Figure 9 with angle on plate on the top right side. Secure with adjustment screw.
4. Adjust restrictor according to examples in Figure 10.
5. Install logs following log installation instructions.

Fig. 9 Restrictor plate.

Examples for Extended Run/Restrictor Plate Settings - top of plate to center of bolt

1. 90° elbow, 40' (12 m) vertical - 2⅞" (73 mm)
2. 90° elbow, 20' (6 m) vertical, 90° elbow, 8' (2.4 m) horizontal - 2⅞" (73 mm)

Figure 10

Vent Termination Clearances

When planning the installation, consider the location of the vent terminal and clearances. Some of the most common clearances to keep in mind are shown in Figure 11.

Important: All vent clearances must be maintained. Check your vent termination clearances against Figures 11 and 12.

The vent should be placed so that people cannot be burned by accidentally touching the vent surfaces when the stove is operating.

The vent termination should be located where it cannot be damaged by such things as automobile doors, lawn mowers or snowblowers and it should be located away from areas where it could become blocked by snow, etc.

Some considerations are:

- Obstructions or impediments to venting.
- Nearby combustible materials that could come into contact with combustion exhaust gases.
- Other nearby openings {within 9” (230 mm)} through which exhaust gas could reenter the building.
- All vegetation within 3’ (914 mm) that may interfere with the draft.

Other factors that influence where the installation will be sited include the location of outside walls, where additional heat may be desired in the home, where the family members gather most regularly, and perhaps most importantly, the distance limitations of the venting system.

IMPORTANT

- The horizontal termination must not be recessed into the exterior wall or siding.
- Horizontal vent runs must be level toward the vent termination.
- Clearances around the vent termination must be maintained.

Your stove is approved to be vented either through the side wall, or vertical through the roof.

- **MHSC does not require any opening for inspection of vent pipe.**
- **Only venting components specifically approved and labelled for this stove may be used.**
- **Minimum clearances between vent pipes and combustible materials is one (1”) inch (25mm), except where stated otherwise.**
- Venting terminals shall not be recessed into a wall or siding.
- Horizontal venting must be installed on a level plane without an inclining or declining slope.

There must not be <u>any</u> obstruction such as bushes, garden sheds, fences, decks or utility buildings within 24” from the front of the termination hood.

Do not locate termination hood where excessive snow or ice build up may occur. Be sure to check vent termination area after snow falls, and clear to prevent accidental blockage of venting system. When using snow blowers, make sure snow is not directed towards vent termination area.

Location of Vent Termination

It is imperative the vent termination be located observing the minimum clearances as shown in Figure 11.

General Venting Information - Termination Location

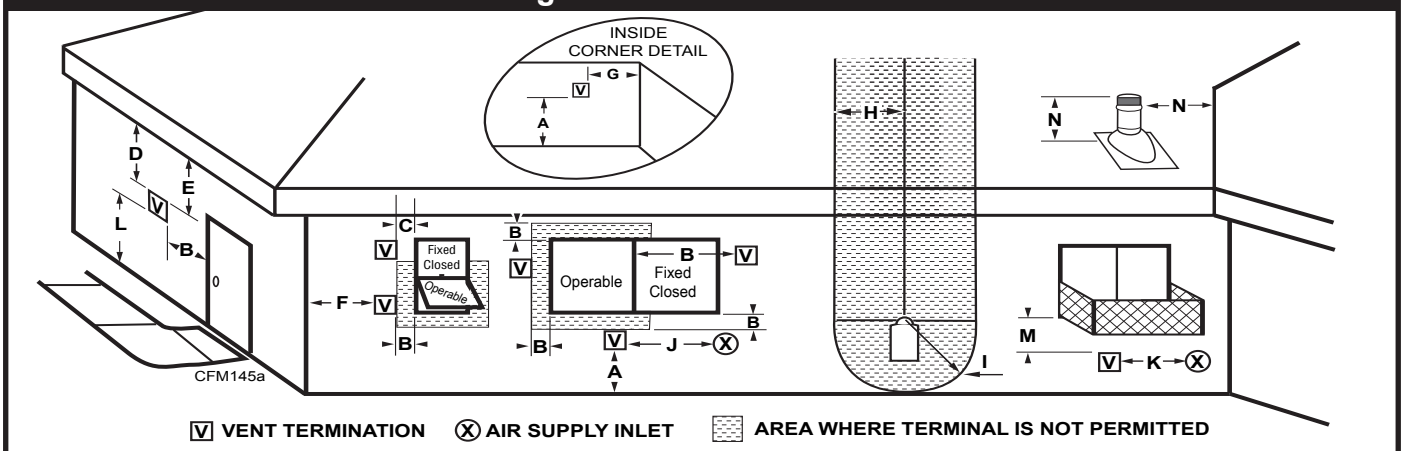

	Canadian Installations[1]	US Installations[2]
A = Clearance above grade, veranda, porch, deck, or balcony	12” (30cm)	12” (30cm)
B = Clearance to window or door that may be opened	6” (15cm) for appliances < 10,000Btuh (3kW), 12” (30cm) for appliances > 10,000 Btuh (3kW) and < 100,000 Btuh (30kW), 36” (91cm) for appliances > 100,000 Btuh (30kW)	6” (15cm) for appliances < 10,000 Btuh (3kW), 9” (23cm) for appliances > 10,000 Btuh (3kW) and < 50,000 Btuh (15kW), 12” (30cm) for appliances > 50,000 Btuh (15kW)
C = Clearance to permanently closed window	12” (305mm) recommended to prevent window condensation	12” (305mm) recommended to prevent window condensation
D = Vertical clearance to ventilated soffit located above the terminal within a horizontal distance of 2’ (610mm) from the center line of the terminal	18” (458mm)	18” (458mm)
E = Clearance to unventilated soffit	12” (305mm)	12” (305mm)
F = Clearance to outside corner	see next page	see next page
G = Clearance to inside corner (see next page)	see next page	see next page
H = Clearance to each inside of center line extended above meter/regulator assembly	3’ (91cm) within a height of 15’ (5m) above the meter/regulator assembly	3’ (91cm) within a height of 15’ (5m)above the meter/regulator assy
I = Clearance to service regulator vent outlet	3’ (91cm)	3’ (91cm)
J = Clearance to nonmechanical air supply inlet to building or the combustion air inlet to any other appliances	6” (15cm) for appliances < 10,000 Btuh (3kW), 12” (30cm) for appliances > 10,000 Btuh (3kW) and < 100,000 Btuh (30kW), 36” (91cm) for appliances > 100,000 Btuh (30kW)	6” (15cm) for appliances < 10,000 Btuh (3kW), 9” (23cm) for appliances > 10,000 Btuh (3kW) and < 50,000 Btuh (15kW), 12” (30cm) for appliances > 50,000 Btuh (15kW)
K = Clearance to a mechanical air supply inlet	6’ (1.83m)	3’ (91cm) above if within 10’ (3m) horizontally
L = Clearance above paved sidewalk or paved driveway located on public property	7’ (2.13m)†	7’ (2.13m)†
M = Clearance under veranda, porch, deck or balcony	12” (30cm)□	12” (30cm)□
N = Clearance above a roof shall extend a minimum of 24” (610mm) above the highest point when it passes through the roof surface, and any other obstruction within a horizontal distance of 18” (450mm).		

1 In accordance with the current CSA-B149 Installation Codes
2 In accordance with the current ANSI Z223.1/NFPA 54 National Fuel Gas Codes
† A vent shall not terminate directly above a sidewalk or paved driveway which is located between two single family dwellings and serves both dwellings
□ only permitted if veranda, porch, deck or balcony is fully open on a minimum 2 sides beneath the floor:
NOTE: 1. Local codes or regulations may require different clearances.
2. The special venting system used on Direct Vent Stoves are certified as part of the appliance, with clearances tested and approved by the listing agency.
3. MHSC assumes no responsibility for the improper performance of the appliance when the venting system does not meet these requirements.

Fig. 11 Vent termination clearances.

Termination Clearances

Termination clearances for buildings with combustible and noncombustible exteriors.

Inside Corner

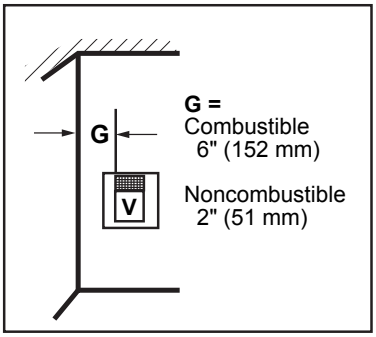

Outside Corner

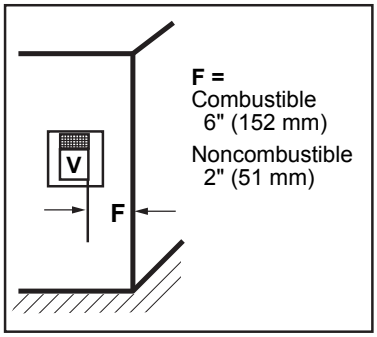

Alcove Applications*

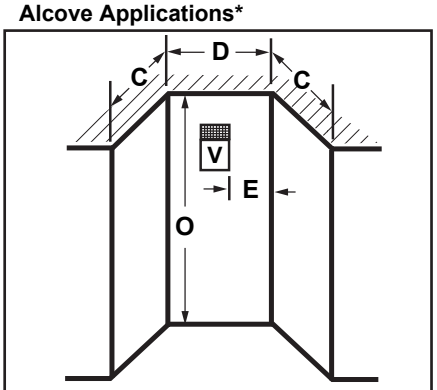

E = Min. 6” (152 mm) for non-vinyl sidewalls
Min. 12” (305 mm) for vinyl sidewalls
O = 8’ (2.4 m) Min.

No. of Caps	$D_{Min.}$	$C_{Max.}$
1	3’ (914 mm)	2 x D_{Actual}
2	6’ (1.8 m)	1 x D_{Actual}
3	9’ (2.7 m)	2/3 x D_{Actual}
4	12’ (3.7 m)	1/2 x D_{Actual}

$D_{Min.}$ = # of Termination caps x 3
$C_{Max.}$ = (2 / # termination caps) x D_{Actual}

584-15

Balcony - with no side wall

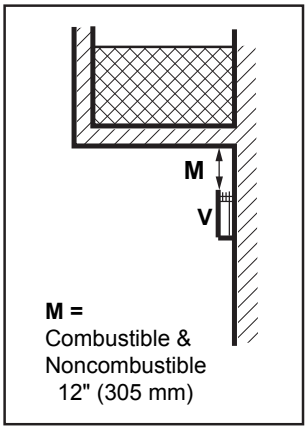

Balcony - with perpendicular side wall

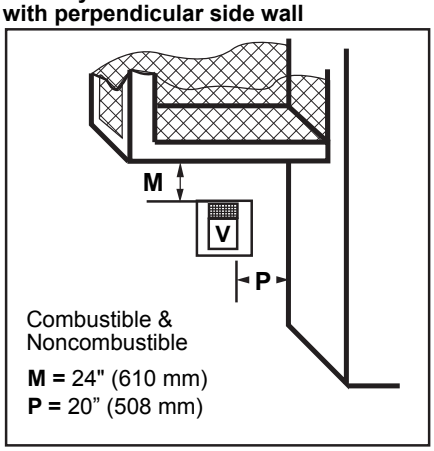

***NOTE:** Termination in an alcove space (spaces open only on one side and with an overhang) is permitted with the dimensions specified for vinyl or non-vinyl siding and soffits. 1. There must be a 3’ (914 mm) minimum between termination caps. 2. All mechanical air intakes within 10’ (1 m) of a termination cap must be a minimum of 3’ (914 mm) below the termination cap. 3. All gravity air intakes within 3’ (914 mm) of a termination cap must be a minimum of 1’ (305 mm) below the termination cap.

Fig. 12 Termination clearances.

Installation

Unpack the Stove

The stove is shipped fully assembled on its back. Unpack the stove and carefully set it upright.

CAUTION

Porcelain enamelled surfaces are fragile. Handle porcelain enamelled castings tenderly. Familiarize yourself with the assembly steps before you begin and proceed with deliberation and care. If possible, have assistance available.

Place enamelled castings on a soft, cushioned surface until you are ready to assemble.

Avoid contact between the castings and other hard surfaces or objects.

NOTE: Verify the two relief doors (located on top of the firebox) are properly seated on the gasket. The doors sit flush on the gasket, and should lift easily from the seal around the opening.

If you are installing the fan, install it before completing the stove venting.

If you are not installing a fan, proceed to the appropriate vent assembly section.

Install Optional Fan Kit FK20

Fan Kit Contents:

- #10 x 1/2” phillips screws, 2
- Control Knob
- Wire Tie
- Retaining Nut
- Snapstat
- Snapstat Bracket
- Blower Assembly w/ Rheostat Control & Snapstat

1. Remove the rear fan cover by removing the four (4) screws holding the cover in place on the rear shroud. (Fig. 13) Retain the screws for future use.
2. Attach the Snapstat to the bracket using two (2) #10 x 1/2” Phillips screws. (Fig. 14)
3. Locate and remove the 1/4-20 x 3/8” hex head bolt installed in the hole in the right rear ledge of the firebox. (A, Fig. 14) Use that bolt to secure the snapstat bracket to the firebox. The mounting hole is slotted to allow you to adjust the bracket so the snapstat head makes contact with the firebox surface. (Fig. 14)
4. Attach the fan to the firebox by reusing the two (2) pan head 1/4-20 screws on the top edge and the two (2) #10 x 1/2” sheet metal screws on the side edges. (Fig. 15)

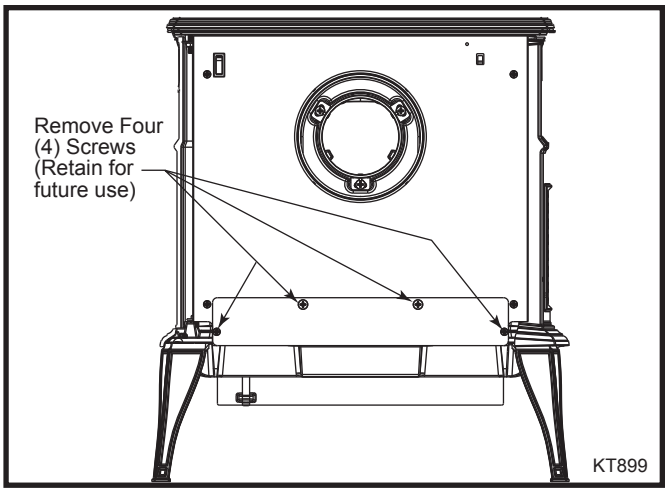

Fig. 13 Remove four (4) screws holding rear fan cover in place. Retain for future use.

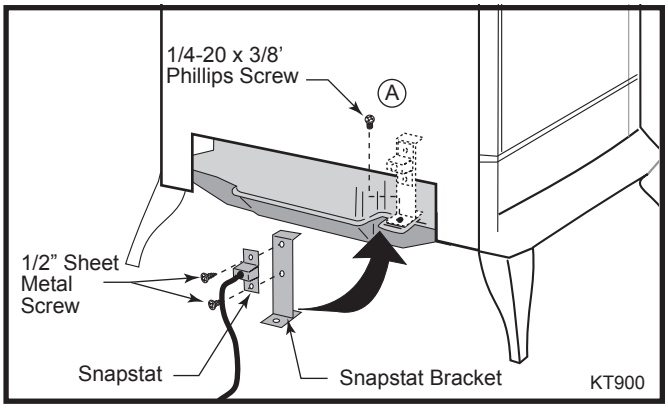

Fig. 14 Attach snapstat.

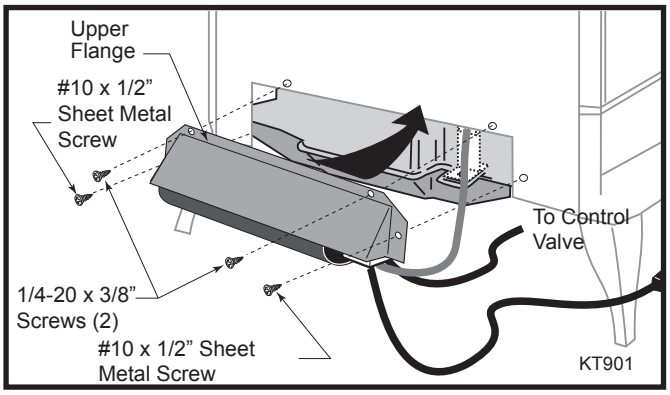

Fig. 15 Use screws removed earlier to attach fan kit to firebox.

5. The rheostat control switch attaches to the control panel plate provided on the front of the stove.
   - Insert the switch box shaft through the hole in the back of the left side of the panel, aligning the locator pin with the smaller hole in the panel. (Fig. 17)
   - Attach the retaining nut to the switch control shaft to secure it to the plate.

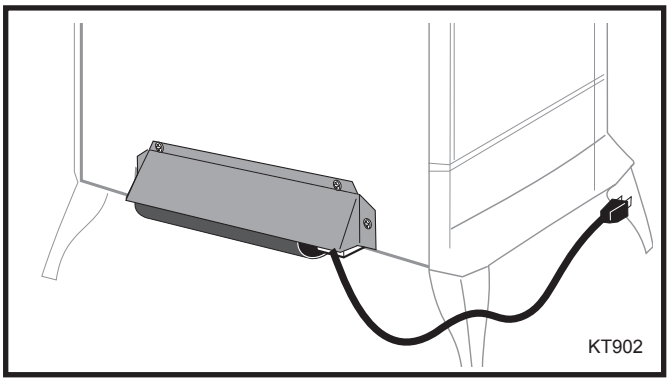

Fig. 16 Correct position of fan skirt installation.

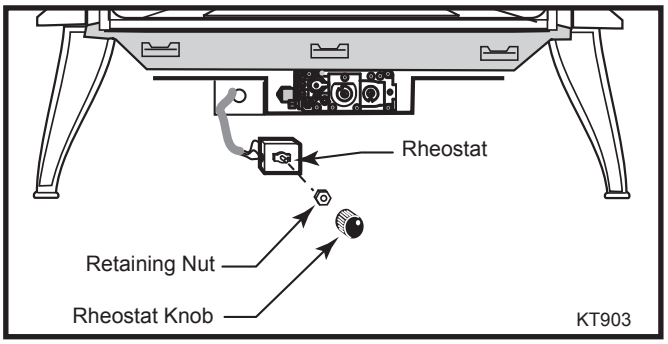

Fig. 17 Attach rheostat to bracket.

- Attach the control knob to the rheostat shaft.
- Use the wire tie to secure the fan and rheostat wire harnesses together to the tubing under the **bottom of the unit.**

Venting System Components

Approved Vent System Components

The Intrepid Heater must be vented to the outdoors through an adjacent exterior wall or through the roof. The venting system must be comprised of the appropriate listed venting components specified on this page. These parts are available from DuraVent Corporation.

See Figure 4 for dimensions relevant to the standard minimum-vent kits.

Simpson DuraVent Components
www.duravent.com
Phone: 1-800-835-4429, Fax: 1-707-446-4740

Minimum Horizontal Vent Kit	**46DVA-KHC**

Venting Component required for:
Basic Straight Through-the-Wall Installation

Horizontal Termination Cap	46DVA-HRC
MHSC Zero Clearance Sleeve (included)	54623
Firestop	46DVA-WFS
Wall Thimble Cover	46DVA-DC
24” Straight (Maximum length)	46DVA24B
Hardware Package (2 req’d)	56167

NOTE: Simpson DuraVent Wall Thimble, 46DVA-WT is ***not*** approved for use with this appliance except in noncombustible masonry walls.

For corner installation add:

45° Elbow, Blk.	46DVA-E45B

Venting Components

90° Elbow, Blk.	46DVA-E90B*
45° Elbow, Blk.	46DVA-E45B
6” Straight, Blk.	46DVA-06B*
9” Straight, Blk.	46DVA-09B
8½” Pipe Extension, Blk	46DVA-08AB*
16” Pipe Extension, Blk	46DVA-16AB
12” Straight	46DVA-12
24” Straight	46DVA-24B*
36” Straight	46DVA-36B
48” Straight	46DVA-48
Square Horizontal Termination Cap	46DVA-HC
Sconce Horizontal Termination Cap	46DVA-HSC
Round Horizontal Termination Cap	46DVA-HRC
Wall Plate	46DVA-DC*
Vinyl Siding Standoff	46DVA-VSS
Snorkel Termination - 14”	46DVA-SNK14
Snorkel Termination - 36”	46DVA-SNK30
Wall Strap	46DVA-WS
Cathedral Ceiling Support Box	46DVA-CS
Storm Collar	46DVA-SC
Firestop Spacer	46DVA-FS
Flashing 0/12 - 6/12	46DVA-F6
Flashing 6/12 - 12/12	46DVA-F12
Wall Thimble	46DVA-WT*
Wall Thimble Cover (Brass)	3PVP-TKV
Wall Firestop	46DVA-WFS
Attic Insulation Shield	46DVA-IS
Steel Chimney Conversion Kit	
Kit A (6⅝” - 8⅝”)	46DVA-KCA
Kit B (6⅝” - 10½”)	46DVA-KCB
Kit C (6⅝” - 13”)	46DVA-KCC
Masonry Chimney Conversion Kit	46DVA-KMC
Vertical Termination Cap (High Wind)	46DVA-VCH
Vertical Termination Cap (Low Profile)	46DVA-VC

*Included in Minimum Horizontal Vent Kit 46DVA-KHC

All DuraVent Straight vent pipe sections have a net length 1½” (37 mm) less than the nominal dimension; i.e., a 6” (152 mm) Straight pipe section has an effective length of 4½” (115 mm).

Refer to Simpson Duravent website for additional components. (www.duravent.com)

Venting System Assembly

General Information

The Intrepid is approved for installation only with the Simpson vent components listed on Page 14. Follow these and the vent component instructions exactly.

For U.S. installations: The venting system must conform with local codes and/or the current National Fuel Gas Code, ANSI Z223.1/NFPA 54

For Canadian installations: The venting system must conform to the current CSA B149.1 installation code.

Options

The Simpson Dura-Vent Direct Vent Pro offers a complete line of component parts for both horizontal and vertical installation. Many items are offered in decorative black as well as galvanized finish. The galvanized pipe and fittings may be used for concealed locations such as attics, or spaces where corrosion is a factor, such as above the roofline. Decorative black painted sections are recommended for use on visible interior runs. Decorative brass trim kits are available for both Wall Thimbles and Ceiling Support Boxes. Snorkel Terminations are available for applications which may require vertical rise on the building exterior.

Planning Your Installation

There are two basic types of Direct Vent Pro installations:

Horizontal Termination (Figs. 18 and 19)
Vertical Terminations (Fig. 20)

When planning your installation, it will be necessary to select the proper length of vent pipe for your particular requirement. For horizontal installations, check these instructions to determine the minimum clearance from the rear of the appliance to the wall. It is also important to note the wall thickness. Select the amount of vertical rise desired or required, for “vertical-to-horizontal” installations (verify that it is within the minimum and maximum limits. Refer to Page 7). To determine the length of vent pipe required for vertical installations, measure the distance from the appliance flue outlet to the ceiling, the ceiling thickness, the vertical rise in an attic or second story, and allow for sufficient vent height above the roofline. For multi-story applications, firestops are required at each floor/ceiling level. If an offset is needed in the attic, additional pipe and elbows will be required.

Figure 18

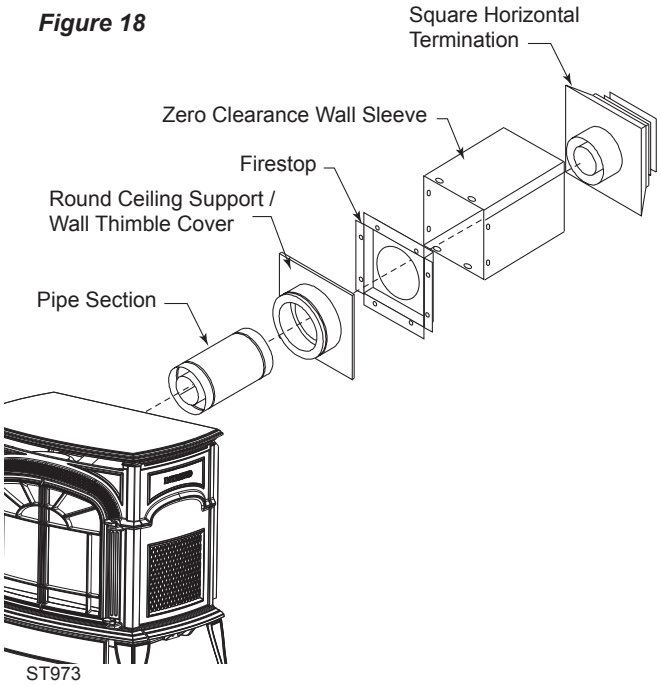

Figure 19

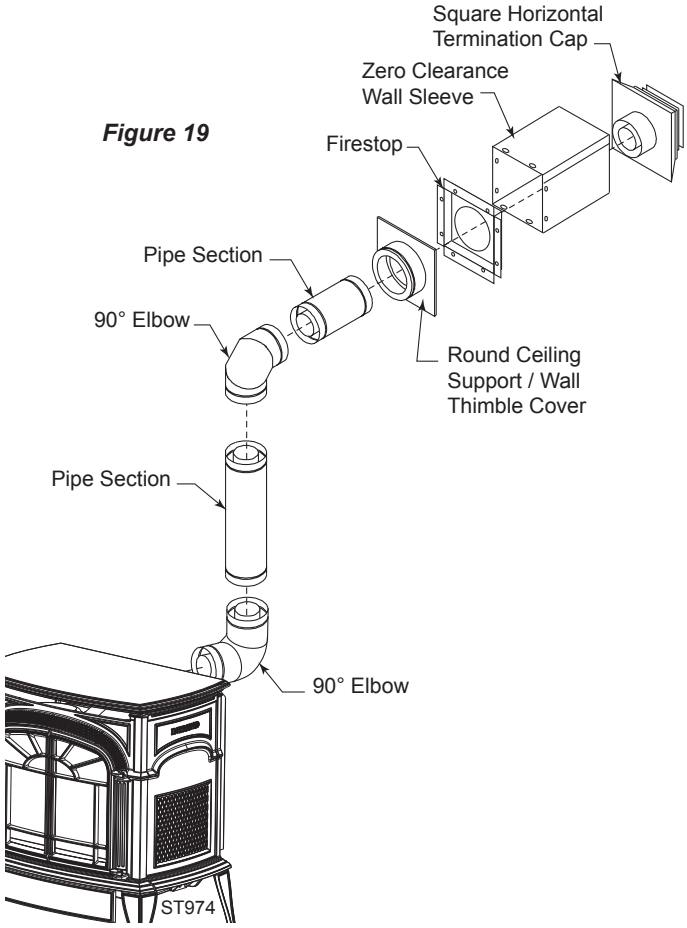

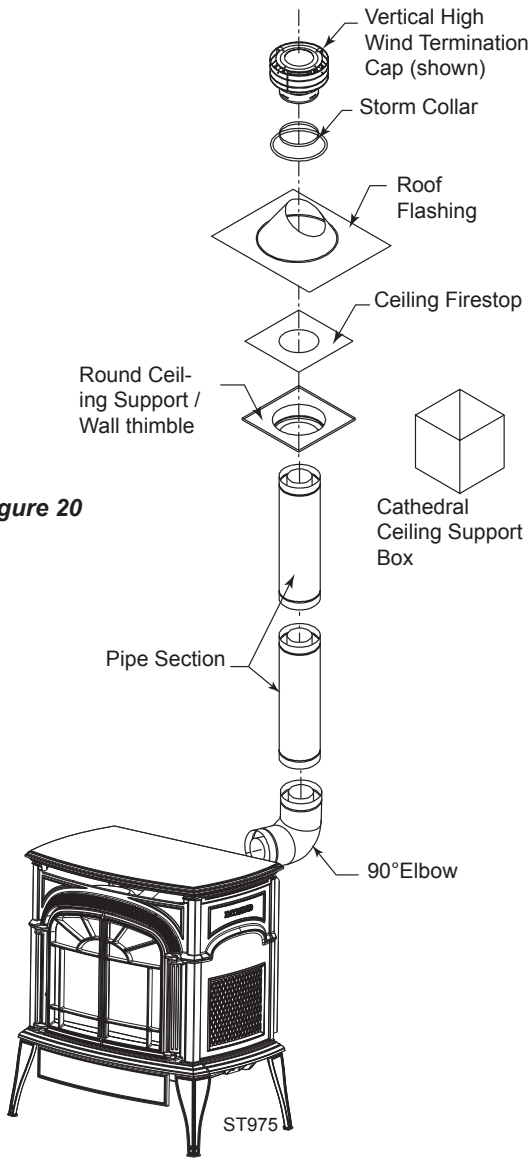

Figure 20

Rear Vent

Use components listed on Page 14 under 'Basic Straight through-the-Wall Installation' for an installation where the heater is parallel to the wall and the vent system extends straight back through that wall.

1. Locate the vent opening on the wall. Refer to Figures 20 & 21 to determine the top of the opening centerline. It may be necessary to first position the stove and measure to find the hole location. Depending on whether the wall is made of combustible materials, cut the opening to the size shown in Figure 21. Combustible wall openings must be framed as shown in Figure 21.
2. Measure the wall thickness and cut the zero clearance sleeve sections to proper length (MAXIMUM 12"). Assemble the sleeve with the #8 sheet metal screws supplied. Attach the firestop plate to the sleeve end with the holes. (Fig. 22) **NOTE:** The zero clearance sleeve is required in combustible walls only.
3. Install the Wall Firestop/Sleeve assembly into the wall cutout and fasten the firestop to the wall cutout framing members. (Fig. 23)

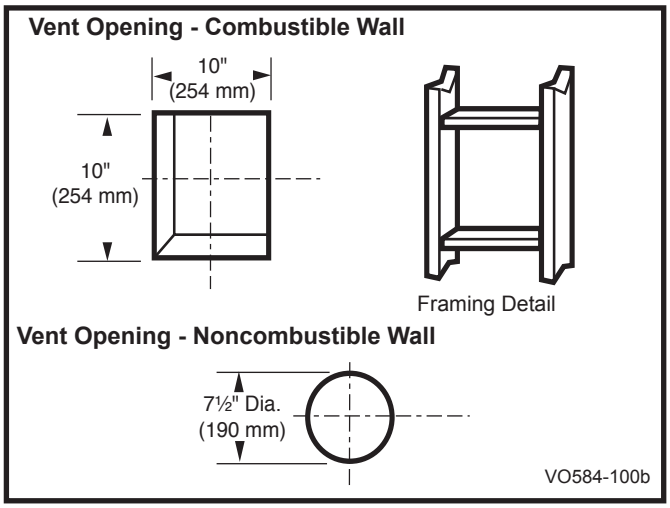

Fig. 21 Locate vent opening. **NOTE: Zero clearance sleeve is required for combustible wall installations.**

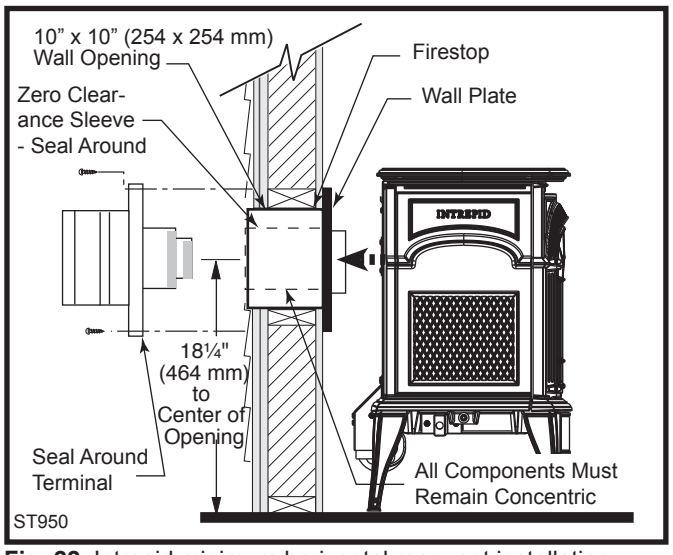

Fig. 22 Intrepid minimum horizontal rear vent installation.

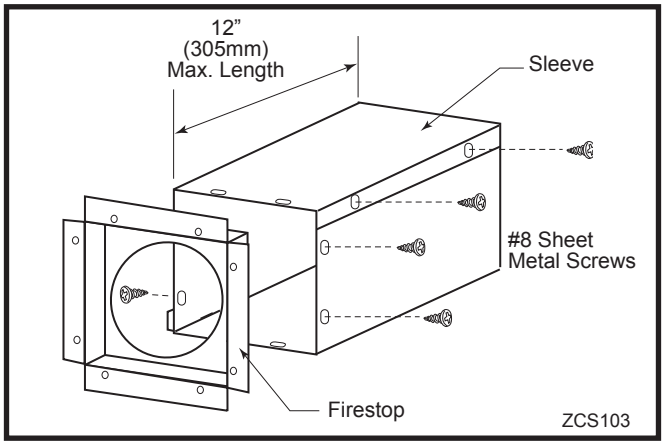

Fig. 23 Assemble the wall sleeve and firestop.

4. Slip the wall cover over the interior end of the horizontal pipe and install into the zero clearance sleeve. Seal the joint inside the wall plate if needed to keep cold air from being drawn into the home.
5. Install the vent terminal. (Fig. 22) Guide the inner and outer vent termination collars into the adjacent pipes. Double check that the vent pipes overlap the collars by 2”. Fasten the termination to the outside wall with the screws provided, and caulk the joint with weatherproof sealant.
6. Use wall straps to support vertical pipe runs at 4’ (1219 mm) intervals.

Horizontal Installation

Step 1. Set the gas appliance in its desired location. Check to determine if wall studs or roof rafters are in the way once the venting system is attached. If this is the case, you may want to adjust the location of the appliance.

Step 2. DirectVent Pro pipe and fittings are designed with special twist-lock connections. To connect the venting system to the appliance flue outlet, a twist-lock appliance adaptor is built into the appliance at the factory. Assemble the desired combinations of black pipe sections and elbows to the appliance adapter with pipe seams oriented towards the wall or floor, as much out of view as possible. (Fig. 24)

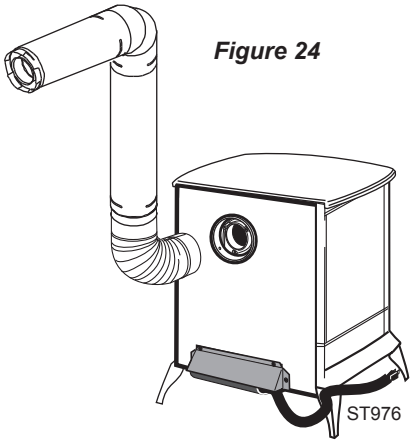

Figure 24

NOTES:

1. Twist-lock procedure: Line up locking lugs on male and female ends of pipe sections. Insert the male end of pipe into the female end until the locking lugs are covered. Twist the female end clockwise an eighth of a turn to lock sections together. (Fig. 25) Screws are not required to secure the joint, but are acceptable provided they do not penetrate the inner wall of the vent pipe.

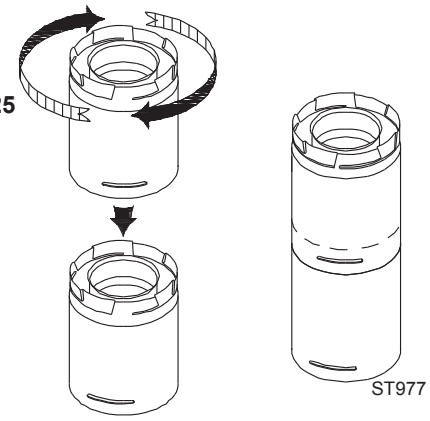

Figure 25

2. Horizontal vent runs of vent pipe must be supported to prevent any downward sags. Horizontal pipe sections should be supported at least every 4’ (1.2 m). Wall straps can be used for this purpose. Alternatively, plumbers tape or other suitable noncombustible material can be used to support the vent pipe.
3. DirectVent Pro venting requires no sealant.

Step 3. With the appliance adapter and pipe section attached, slide the stove into its correct location. Mark the wall for a square hole that measures 10” x 10” (254 x 254 mm). The centerline of the pipe should line up with the center of the square hole. (Fig. 26) Cut and frame the square hole in the exterior wall where the vent will be terminated. If the wall being penetrated is constructed of noncombustible material only, i.e. masonry block, brick or concrete only, a hole with zero clearance is acceptable.

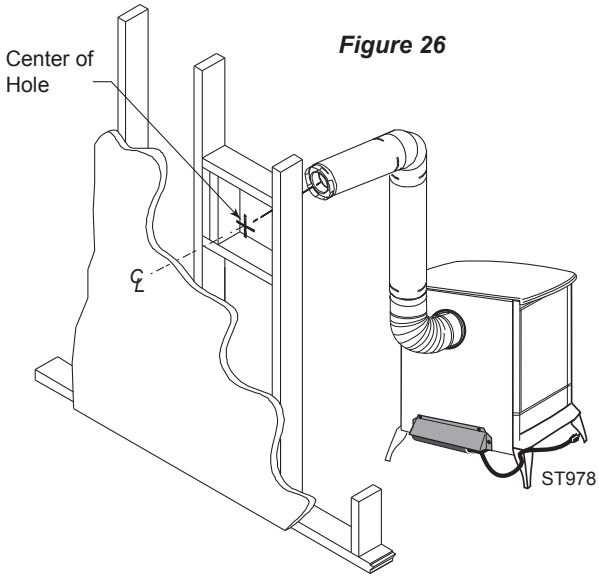

Figure 26

NOTES:

1. The horizontal run of venting must be level, or have a 1/4” (6 mm) rise for every 1’ (305 mm) of run toward the termination. Never allow the vent to run downward. A downward slope can trap heat and become a possible fire hazard.

2. The location of the horizontal vent termination on an exterior wall must meet all local and national building codes, and must not be easily blocked or obstructed. Refer to Pages 10 and 11 for proper Termination Clearances.

For installations requiring a vertical rise on the exterior of the building, 14” (356 mm) and 36” (914 mm) tall snorkel terminations are available. (Fig. 27) Follow the same installation procedures as used for standard horizontal terminations. If the snorkel termination must be installed below grade level, (i.e. basement application), proper drainage must be provided to prevent water from entering the snorkel termination. (Fig. 28) Do not attempt to enclose the snorkel within the wall or any other type of enclosure.

Figure 27

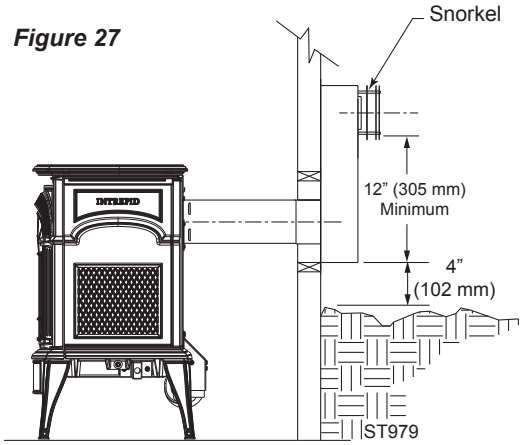

Figure 28

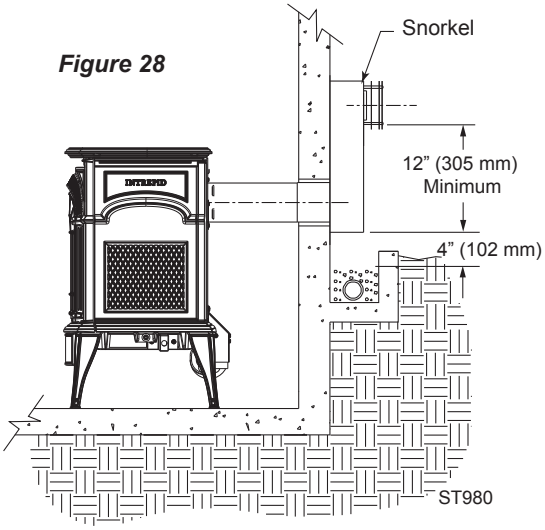

Step 4. Position the horizontal termination cap in the center of the square framed hole, and attach to the exterior wall with the four (4) wood screws provided. Before attaching the vent termination cap to the exterior wall, run a bead of non-hardening silicone sealant around the outside edges to make a seal between the cap and the wall. The arrow on the vent cap should be pointing up. Ensure proper clearances to combustible materials are maintained. (Fig. 29)

NOTES:

1. The four (4) wood screws provided should be replaced with appropriate fasteners for use on brick, block, concrete or other types of sidings.
2. For buildings with vinyl siding or stucco, another component must be used between the horizontal termination cap and the wall surface. The vinyl siding standoff prevents excessive heat from possibly melting the vinyl siding material. Vinyl siding standoffs are not required with snorkels. For vinyl wall installations a 4-piece vinyl siding standoff should be assembled and installed between the horizontal termination cap and the exterior wall. (Fig. 30) The vinyl should be cut away to the outer edges of the assembled standoff.

Figure 29

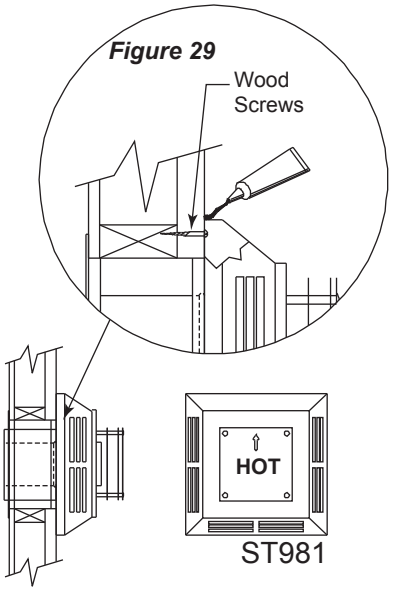

Figure 30

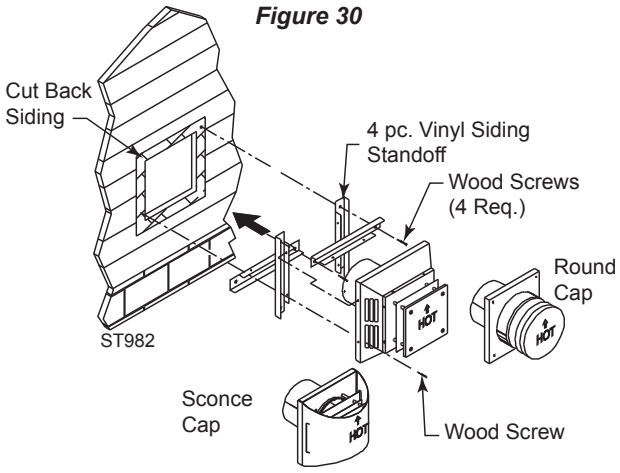

IMPORTANT: You must attach the four (4) pieces of the new vinyl siding standoff to the horizontal termination cap in specific order to ensure a weather tight fit. Loosely assemble the four parts, in order, around the base of the horizontal termination cap. Place the first of four pieces along the upper edge of the cap, then using two (2) screws per side, secure each piece to the predrilled holes along both sides of the cap, finally, attach the final piece to the bottom edge of the cap. Tighten all screws and mount cap, with all four (4) pieces attached, directly onto the wall with the four (4) 2½” (64 mm) screws provided. (Fig. 30)

3. When penetrating through stucco wall, install the counter flashing. The counter flashing allows stucco, or other materials, to be finished directly to the sides of the termination cap. First attach the counter flashing to the base of the horizontal termination cap with the small screws provided, then mount entire assembly onto the wall with the four (4) 2½" (64 mm) wood screws provided.
4. If the optional copper version of the horizontal termination cap is installed, use an appropriate noncombustible material to avoid direct contact between the galvanized and copper metals to prevent possible galvanic reaction.

Step 5. Before connecting your horizontal pipe sections to the horizontal termination cap, slide the wall thimble cover over the pipe section nearest the interior side of wall. (Fig. 31)

Step 6. Slide the appliance and vent assembly towards the wall, carefully inserting the pipe section into the cap assembly. It is important the pipe section extends into the back of the termination cap with a minimum overlap of 1¼" (32 mm). Use the two (2) sheet metal screws provided to secure the pipe section to the back of the termination cap. The wall thimble cover will cover the screw heads. (Fig. 31)

Figure 31

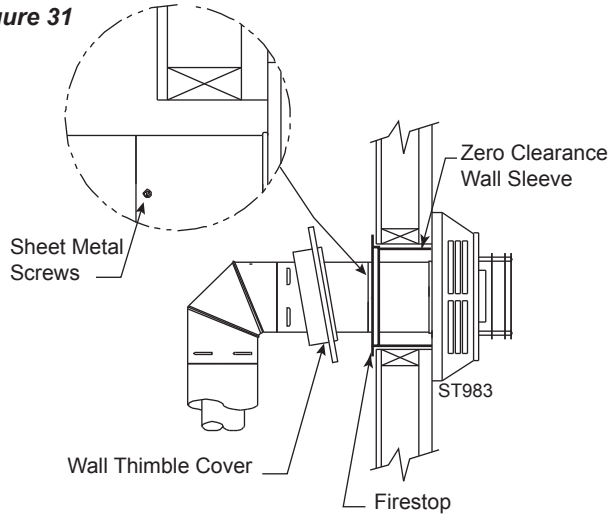

Step 7. Slide the wall thimble cover up to the wall surface and attach to the wall with screws provided. (Fig. 32) Apply optional decorative brass trim to wall thimble cover if desired.

Vertical Installation

Step 1. Check these installation instructions for required clearances (air spaces) to combustibles when passing through ceilings, walls, roofs, enclosures, attic rafters or other nearby combustible surfaces. Do not pack air spaces with insulation. Check these instructions for maximum vertical rise of the venting system and any maximum horizontal offset limitations.

Figure 32

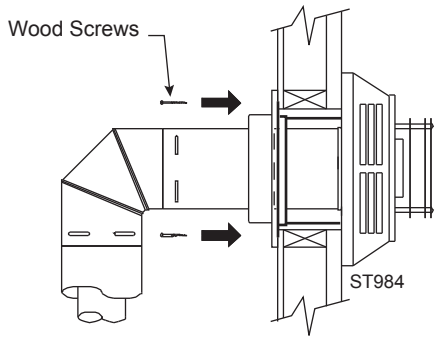

Step 2. Set the gas appliance in the desire location. Drop a plumb bob down from the ceiling to the position of the appliance flue exit, and mark the location where the vent will penetrate the ceiling. Drill a small hole at this point. Next, drop a plumb bob from the roof to the hole previously drilled in the ceiling, and mark the spot where the vent will penetrate the roof. (Fig. 33) Determine if ceiling joists, roof rafters, framing or other materials will obstruct the venting system. You may wish to relocate the appliance or to offset, to avoid cutting load-bearing members.

Figure 33

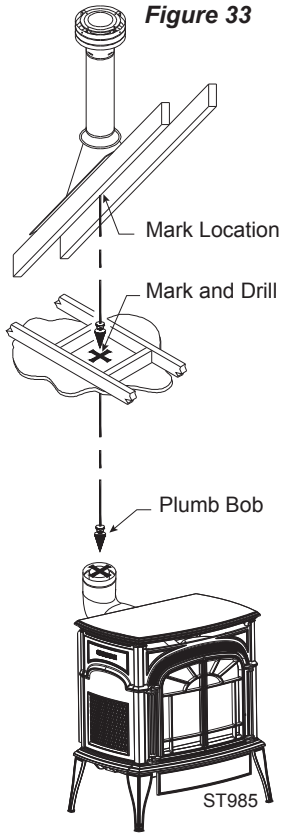

Step 3. To install the round ceiling support/wall thimble cover in a flat ceiling, cut a 10" x 10" (254 x 254 mm) square hole in the ceiling (unless otherwise specified) centered on the hole drilled in Step 2. Frame the hole as shown in Figure 34.

Step 4. If the twist-lock appliance adapter has not been installed on the stove, do so now.

Step 5. Assemble the desired pipe sections and elbows necessary to reach from the appliance adapter up through the round ceiling cover or support box. Ensure that all pipe and elbow connections are in their fully twist-locked position.

Step 6. Cut a hole in the roof centered on the small drill hole placed in the roof in Step 2. The opening should be of sufficient size to meet the minimum requirements for clearance to combustibles, as specified. Continue to assemble pipe sections and elbows as necessary to reach up through the roof line. Galvanized pipe and elbows may be utilized in the attic, as well as above the

Figure 34

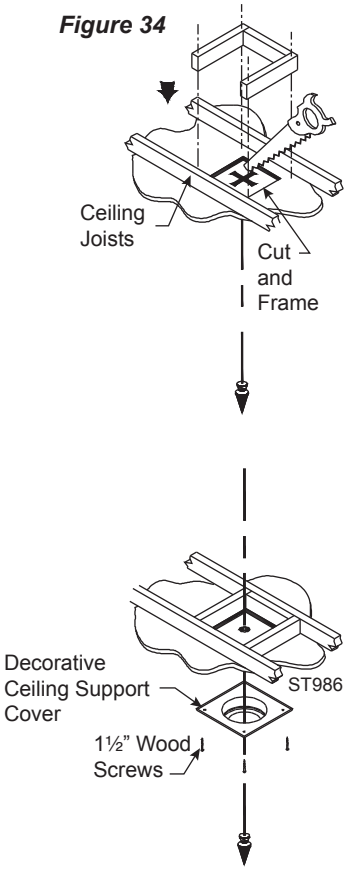

roofline. The galvanized finish is desirable above the roofline, due to higher corrosion resistance.

NOTES:

1. If exact lengths or distances must be met between elbow offsets or elsewhere, use the pipe extensions to adjust onto standard pipe sections. (Fig. 35)

Figure 35

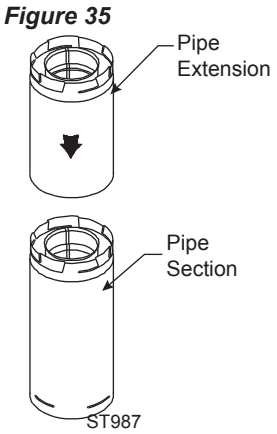

2. If an offset is necessary in the attic to avoid obstructions, it is important to support the vent pipe in order to avoid excessive stress on the elbows. Wall straps or plumber tape may be used for this purpose. (Fig. 36)
3. Wherever possible, use 45° elbows instead of 90° elbows. The 45° elbow offers less restriction to the flow of flue gases and intake air.

Figure 36

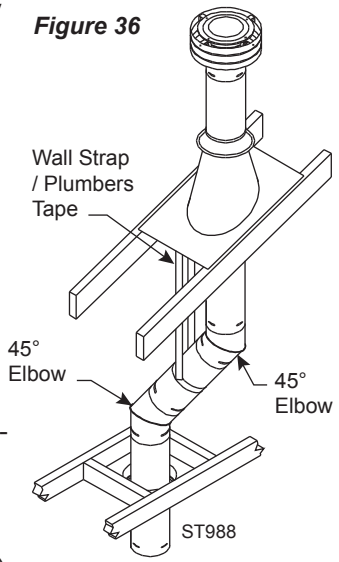

Step 7. Slip the roof flashing over the pipe section(s) protruding through the roof. Use a non-hardening sealant between the roof flashing and the roofing to prevent water leakage. Secure the base of the roof flashing to the roof with roofing nails. Ensure the roofing material overlaps the top edge of the roof flashing. (Fig. 38) Verify that you have at least the minimum clearances to combustibles at the roofline and in the attic.

Step 8. Continue to add pipe sections until the height of the system (before adding the cap) meets the minimum building codes requirements as described in Table 2, Figure 37. Note that for steep roof pitches, the vent height must be increased. In high wind conditions, nearby trees, adjoining rooflines, steep pitched roofs and other similar factors can result in poor draft, or down drafting. In these cases, increasing the vent height or switching to the high wind termination cap may help to solve the problem.

Figure 37

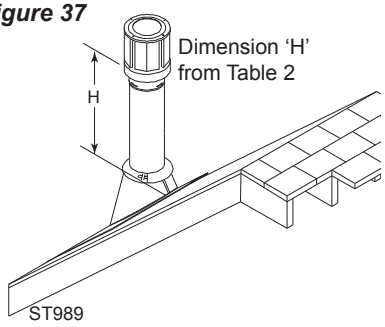

Table 2	
Roof Pitch	**Minimum Height**
Flat 7/12	1' (914 mm)
Over 7/12 to 8/12	1'6" (457 mm)
Over 8/12 to 9/12	2' (610 mm)
Over 912 to 10/12	2'6" (762 mm)
Over 10/12 to 11/12	3'3" (990 mm)
Over 11/12 to 12/12	4' (1.2 m)
Over 12/12 to 14/12	5' (1.5 m)
Over 14/12 to 16/12	6' (1.8 m)
Over 16/12 to 18/12	7' (2.1 m)
Over 18/12 to 20/12	7'3" (2.3 m)
Over 20/12 to 21/12	8' (2.4 m)

Step 9. Slip the storm collar over the pipe section, and push it down to the top of the roof flashing. (Fig. 38) Use non-hardening sealant between the storm collar and the pipe section

Step 10. Holding the bottom of the termination cap only, twist lock the cap onto the last pipe section protruding above the roofline.

NOTES:

1. For multi-story vertical installations, a ceiling firestop is required at the second floor, and any subsequent floors. (Fig. 39) Cut and frame a 9" x 9" (229 x 229 mm) square opening for installation of the ceiling firestop.
2. If vent passes through any occupied areas above the first floor, including closets and storage spaces, it must be enclosed. The enclosure may be framed and covered with sheet rock with standard construction materials, but required clearances to combustibles must be maintained. Consult these installation instructions for the minimum allowable clearances between the outside of the vent pipe and the combustible surfaces of the enclosure. Do not fill required air spaces with insulation.

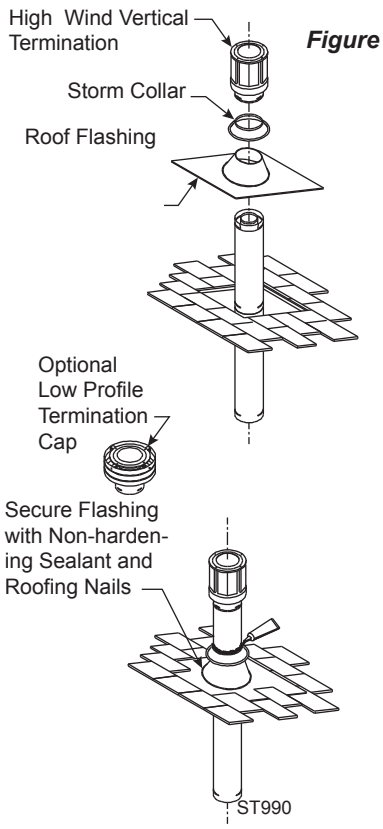

Figure 38

3. If venting system passes through an attic space an attic insulation shield must be installed to prevent contact between pipe sections and the insulation. Nail the base to floor of attic and adjust shield for appropriate insulation level, then attach the collar at the top of assembly. (Fig. 39) For vaulted ceilings, the attic insulation shield cannot be installed. To prevent building insulation and other debris from entering the support box or contacting the pipe, a chase enclosure can be constructed around the support box. Ensure proper clearance to combustibles are maintained.

Cathedral Ceiling Installation

Step 1. Follow installation Step 1 and 2 under Vertical Termination.

Step 2. Using the plumb bob, mark the centerline of the venting system on the ceiling and drill a small hole through the ceiling and roof at this point. From the roof, locate the drill hole and mark the outline of the Cathedral Ceiling Support Box.

Step 3. Remove shingles or other roof covering as necessary to cut the rectangular hole for the support box. Cut the hole 1/8” (3 mm) larger than the support box outline.

Step 4. Lower the support box through the hole in the roof until each side of the bottom of the support box protrudes at least 2” (51 mm) below the ceiling. (Fig.

Figure 39

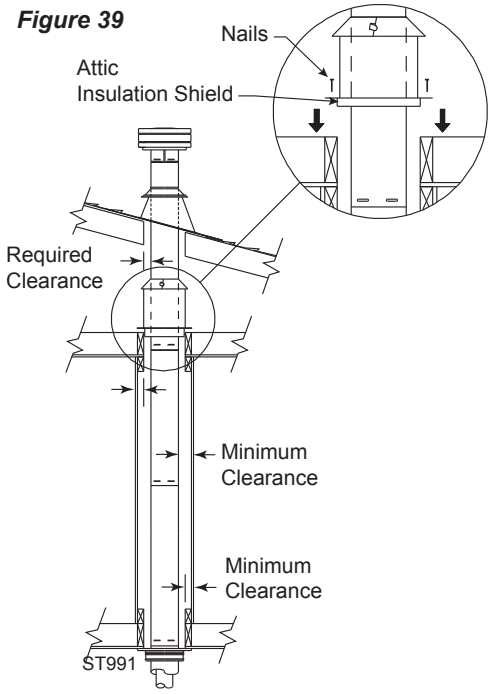

40) Align the support box both vertically and horizontally with a level. Temporarily tack the support box in place through the inside walls and into the roof sheathing.

Figure 40

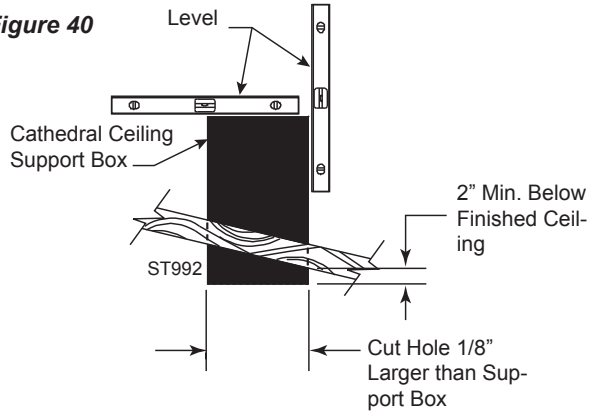

Step 5. Using tin snips, cut the support box from the top corners down to the roofline, and fold the resulting flaps over the roof sheathing. The flaps may be trimmed as needed. (Fig. 41) Before nailing it to the roof, run a bead of non-hardening sealant around the support box to make a seal between the support box and the roof. Clean out any combustible material from inside the support box.

Step 6. Follow Steps 4 and 5 of the Vertical Installation instructions.

Step 7. Place the support clamp (provided with the support box) inside the support box (at the bottom), and secure to the pipe section. The clamp allows the support box to support the weight of the pipe sections. Continue to add pipe sections until you are above the roofline.

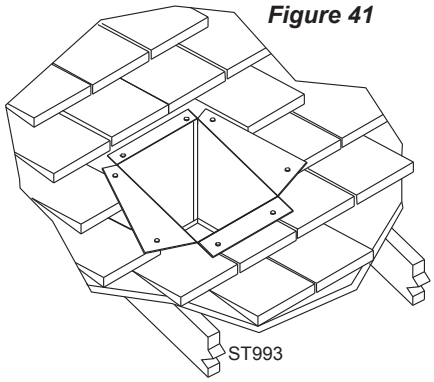

Figure 41

Step 8. Follow Steps 7 through 10 of the Vertical Installation instructions

Step 9. Install the black trim collar around the outside of the Cathedral ceiling support box. The two pieces of the trim collar slide over one another to allow for easy adjustment around the support box. Using the six (6) screws provided, secure the four corners and the overlapping sections of the trim collar to the underside of ceiling. You may want to predrill the holes for the overlapped sections for ease of installation. (Fig. 42)

Figure 42

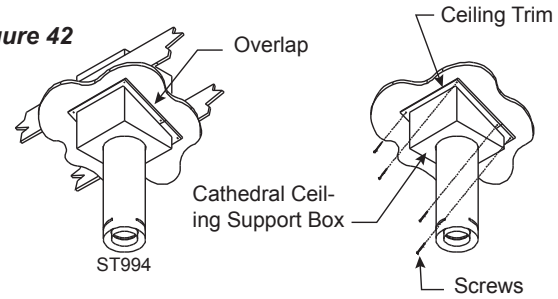

General Maintenance

Conduct an inspection of the venting system annually. Recommended areas to inspect are as follows:

1. Check areas of the venting system which are exposed to the elements for corrosion. These will appear as rust spots or streaks, and in extreme cases, holes. These components should be immediately replaced.
2. Remove the vertical terminations cap and shine a flashlight down the vent. Remove any bird nests, or other foreign material.
3. Check for evidence of excessive condensation, such as water droplets forming in the inner liner, and subsequently dripping out at joints. Continuous condensate can cause corrosion of caps, pipe and fittings. It may be caused by having excessive lateral runs, too many elbow and exterior portions of the system being exposed to cold weather.
4. Inspect joints to verify that no pipe sections or fittings have been disturbed or loosened. Also check mechanical supports such as wall straps or plumbers tape for rigidity.

Supplemental Canadian Instructions

When installing DirectVent Pro on appliances in Canada, a 2-piece decorative wall thimble is required in order to comply with IR #41. (Fig. 18 and 20) Install galvanized exterior wall thimble plate on exterior of building and black decorative wall thimble plate on the interior side of wall. Install wall thimble centered through a square framed opening in wall. Be sure to maintain all minimum clearances. When installing DirectVent Pro vertically through floors, a ceiling firestop is required at every floor/ceiling level.

Vertical Through Existing Chimney

The heater must be vented to the outdoors through an existing masonry or prefabricated fireplace chimney system through the roof.

The heater is approved to be vented to the outdoors through any solid-fuel fireplace chimney that has been constructed or installed in accordance with the national, Provincial/State and local building codes and is constructed of noncombustible materials. For Venting Requirements, refer to Page 10. Refer to Venting Components on Page 14.

Converting a Class-A Metal Chimney or Masonry Chimney to a Direct Vent System

Application

These instructions apply to the Simpson Dura-Vent Direct Vent Conversion kits for factory-built Class-A metal chimneys and masonry chimneys. These venting systems, in combination with the gas appliance, have been tested and listed by a major testing agency such as UL, AGA, Omni or Warnock Hersey. Check the manufacturer's rating plate and instruction manual to confirm that a Simpson Dura-Vent Direct Vent Chimney Conversion system is approved for use on the brand name appliance you have selected.

IMPORTANT

Read all instructions carefully before starting the installation. Failure to follow these instructions may create a fire or other safety hazard, and will void the warranty. Be sure to check the appliance manufacturer's installation instructions for specific venting and clearance to combustible requirements, which may vary from one appliance to another.

Installation Precautions

The Simpson Dura-Vent Direct Vent System is an engineered product that has been designed and tested for use with an approved list of direct vent gas appliances.

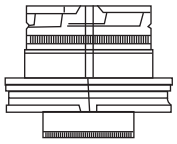

Use Conversion Kit A (#0931) for the following chimney:
6” ID Metalbestos
6” ID Security Chimney
6” ID Jackes - Evans
6” ID Hart & Cooley
6” ID Pro Jet

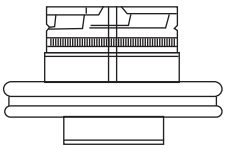

Use Conversion Kit B (#0932) for the following chimney:
6” ID Simpson Dura-Vent
7” & 8” ID Metalbestos
7” ID Security Chimney
7” & 8” ID Jackes - Evans
7” & 8” ID Hart & Cooley
7” & 8” ID Pro Jet
6” & 7” ID Metal -Fab
6” & 7” ID American Metals

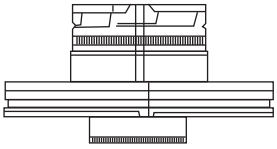

Use Conversion Kit C (#0933) for the following chimney:
7” & 8” ID Simpson Dura-Vent
8” ID Air Jet
8” ID Metal Fab
8” ID American Metals

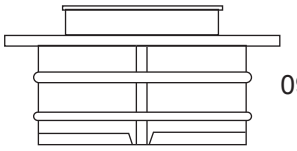

0909B

ST955

The Simpson Dura-Vent warranty will be voided, and serious fire, health or other safety hazards may result from any of the following actions:

- Installation of any damaged Direct Vent component.
- Unauthorized modification of the Direct Vent System.
- Installation of any component part not manufactured or approved by Simpson Dura-Vent.
- Installation other than as instructed by Simpson Dura-Vent and the appliance manufacturer.

Consult your local building codes before beginning the installation. Have the existing installation inspected by a qualified chimney sweep or professional installer, prior to converting to direct vent. The existing chimney system must be in serviceable condition, and functionally sound. **The direct vent conversion described herein applies only to factory-built metal ceiling-supported type systems and masonry through-the-wall type systems. NOTE: You cannot install a Conversion Kit in a through-the-wall type factory-built metal chimney.**

General Installation

Two different types of direct vent conversion systems are described here. One is through an existing factory-built metal chimney going through the ceiling. The other is through the wall of an existing masonry chimney. Follow the appropriate directions for your situation.

A typical direct vent conversion of a factory-built metal chimney is shown in Figure 43. The concept of the direct vent conversion is to connect an adapter to an Underwriters Laboratories listed 4” diameter aluminum flex pipe (Simpson Dura-Vent’s DuraFlex is an example of a UL listed flex pipe). The flex is then passed down through the center of the existing metal chimney system. Three sizes of termination caps are available which should fit most sizes and makes of metal chimney systems. The Retro Connector (909B) is then attached to the bottom of the flex pipe. Both the cap adapter and retro connector are attached to the existing chimney with sheet metal screws. The appliance is then connected to the chimney with appropriate black direct vent pipe and an adjustable length section.

A typical conversion of an existing masonry chimney is shown in Figure 45. For installation through the wall of an existing masonry chimney, a cap adapter (985K) and flashing are used at the top of the masonry chimney. The 4” aluminum liner is connected to the adapter and is passed down the chimney and out through the masonry wall. This is attached to the retro connector (909B) which is in turn, attached to the masonry wall and is then connected to the direct vent pipe leading to the appliance.

Figure 43
Converting a Factory-Built Metal Chimney

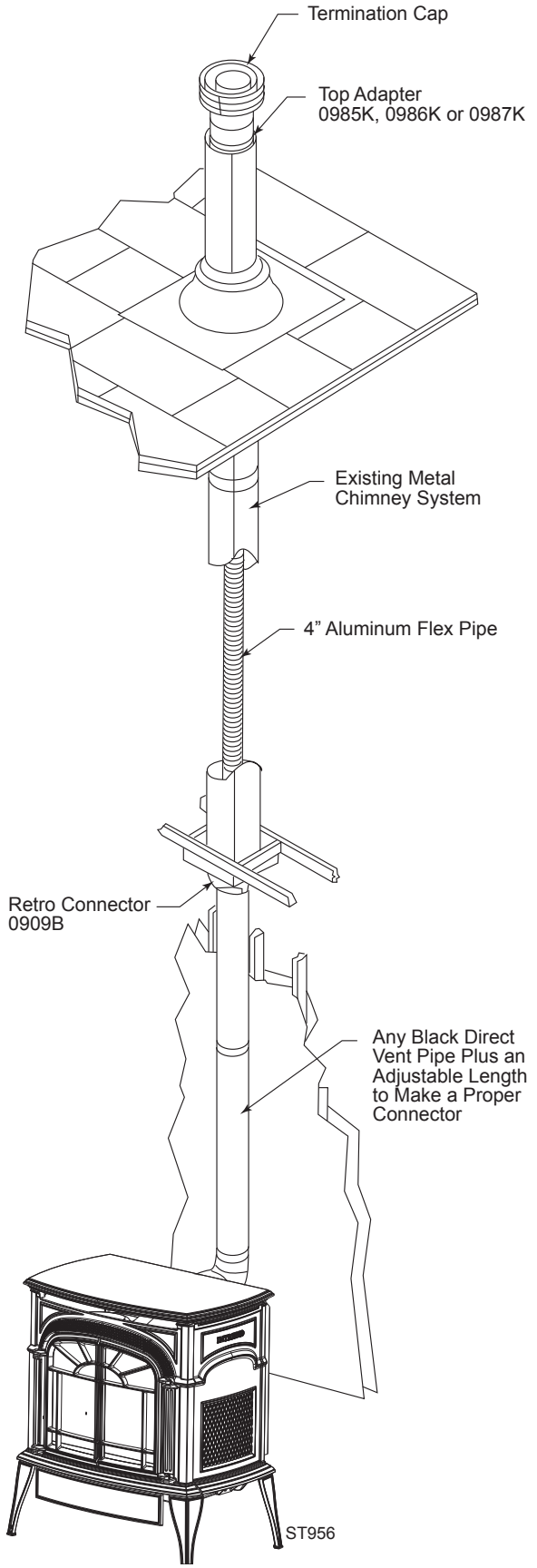

Figure 44
Co-Linear Insert

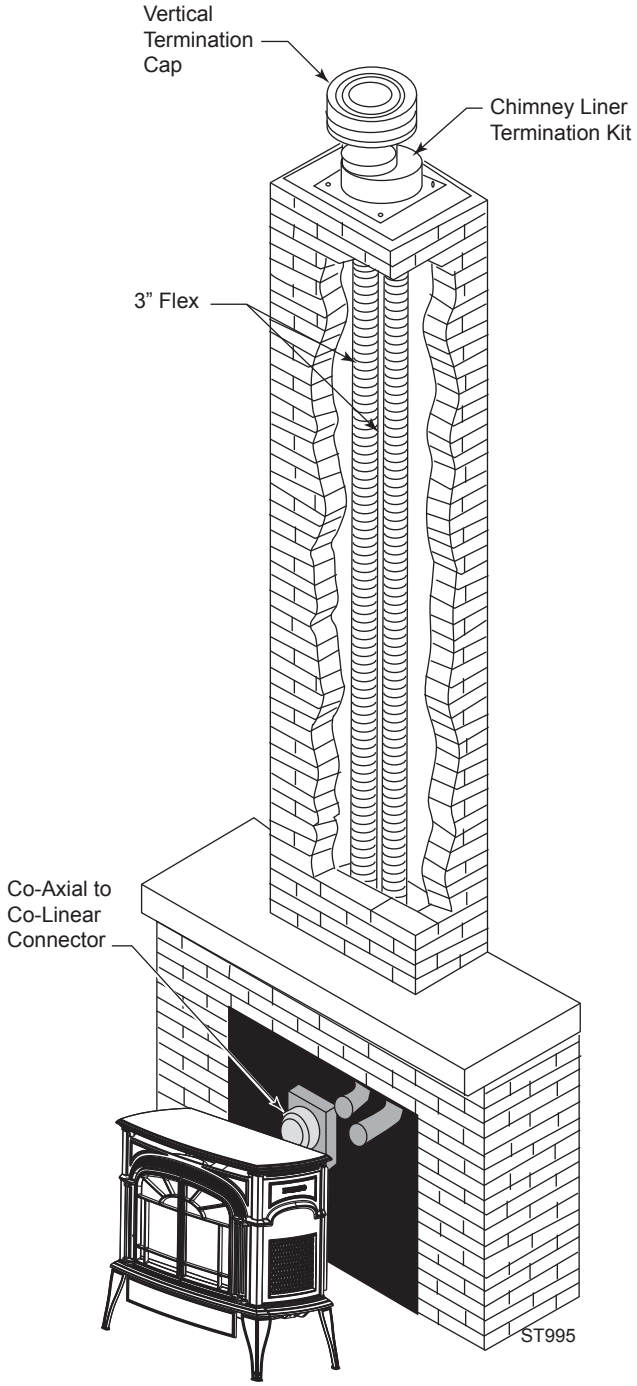

Figure 45
Converting a Masonry Chimney

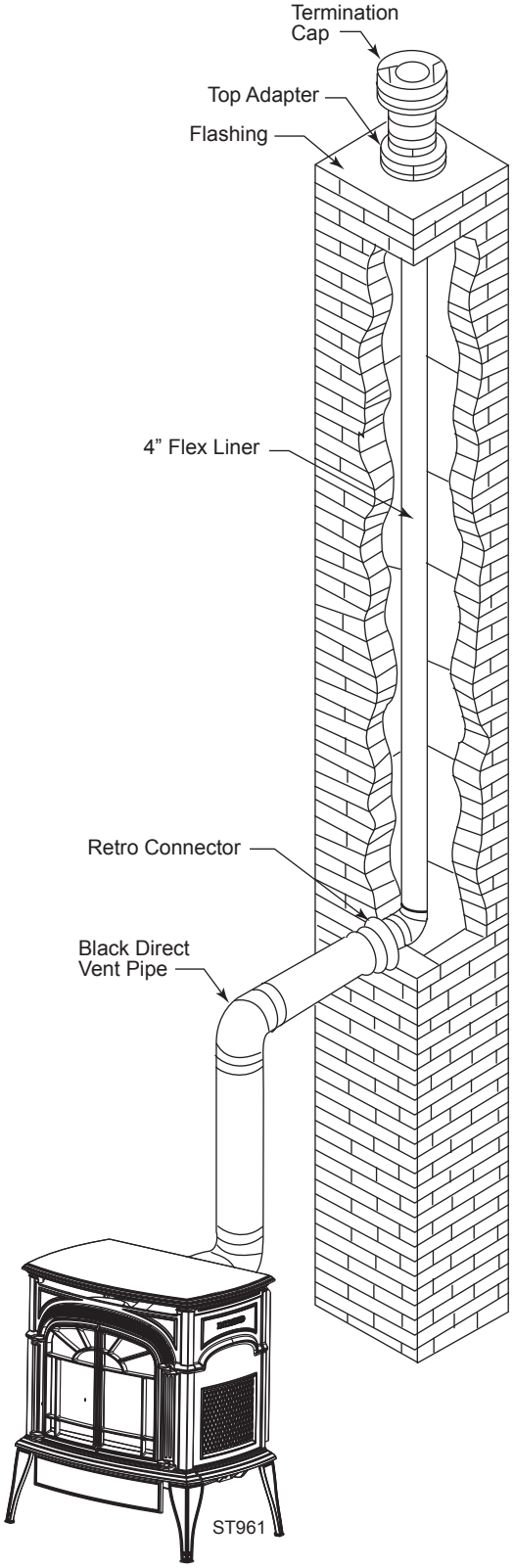

Installation Instructions for Converting a Factory-Built Metal Chimney

Figure 46

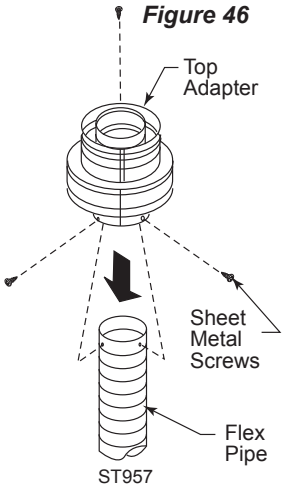

1. Remove the existing chimney cap.
2. Measure the distance from the top end of the chimney to the bottom of the ceiling support box, add 3” to this measurement and cut a section of 4” flex pipe to that length (the flex should already be extended to its nominal length).
3. Connect the end of the flex pipe section to the underside of the cap adapter you have selected using three (3) sheet metal screws. (Fig. 46)

Figure 47

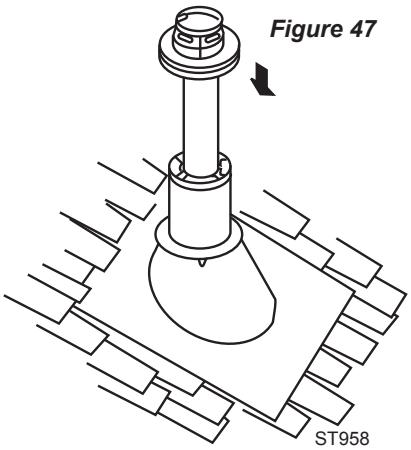

4. Pass the flex pipe down through the center of the chimney system, and center the adapter on the top of the chimney pipe. Drill four (4) 1/8” diameter holes through the adapter and into the chimney top. Insure that you are in fact, drilling into the metal on the chimney. Twist-lock the termination cap (980, 991 or 930) onto the adapter. (Figs. 47 and 48)

Figure 48

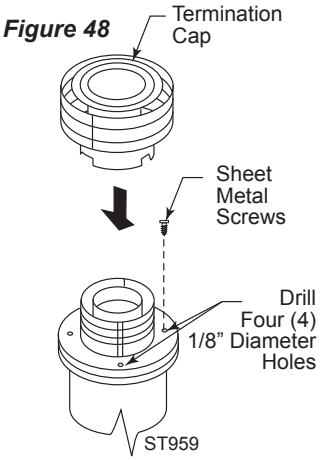

5. Pull the flex pipe down through the ceiling support box, until it protrudes approximately 3” (76 mm). Connect the flex pipe to the retro connector by slipping it into the 4¾” (121 mm) diameter sleeve on the top side of the connector. Use three (3) sheet metal screws to assemble these two parts.

Figure 49

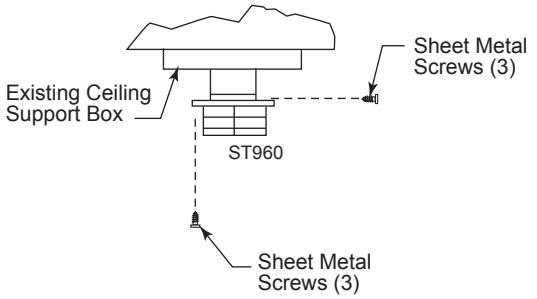

6. Push the flex pipe back up into the ceiling support box, center the retro connector and attach it to the support box or decorative sleeve for double wall solid packed pipe, with the sheet metal screws furnished. The holes in the retro connector are pre-punched. (Fig. 49)
7. The connection between the appliance and the retro connector may be completed with sections of black direct vent pipe, together with an adjustable length.

Installation Instructions for Converting a Masonry Chimney

IMPORTANT: The existing masonry flue opening need to have an area of at least 35 square inches (226 square mm) to insure proper intake/exhaust flow.

1. Before cutting any holes, assemble the desired sections of black direct vent pipe to determine the center of the masonry penetration.
2. Once the center point of the penetration has been determined, cut a 6” (152 mm) diameter hole in the masonry. Be careful, if the hole is too large, the retro connector might not mount properly. If the hole is too small, then the appliance might starve for intake air. If there is a frame wall in front of the masonry wall, cut and frame a 10” (254 mm) clear square opening in the wall (centered around the 6” (152 mm) masonry opening). If there is sheet rock only (no studs) in front of the masonry, the 10” (254 mm) clear opening is still needed, but does not need to be framed. This allows the retro connector to mount directly on the masonry and provide clearance to the combustibles. (Fig. 54)
3. Secure the flashing (705C) to the top of the masonry chimney using a bead of non-hardening sealant-adhesive. If the flashing is larger than the top of the chimney, then cut and fold flashing as needed to fit chimney. (Fig. 50)
4. To determine the length of flex required, measure from 3” (76 mm) above the top of the flashing down to the level of the opening. Add to this measurement the distance from the center of the chimney to out through the wall. Cut a piece of 4” (102 mm) flex to this length (the flex should already be extended to its nominal length).

Figure 50

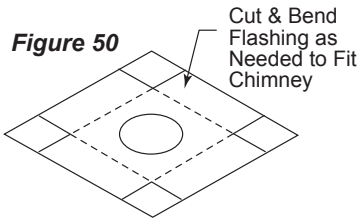

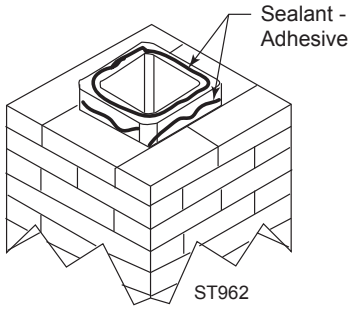

5. Connect the 4” flex liner to the cap adapter (985K) using three sheet metal screws. (Fig. 46)
6. Feed the 4” flex liner through the flashing into the chimney. Continue to feed the liner out through the opening in the masonry wall.
7. Secure the cap adapter to the flashing. Use three (3) sheet metal screws through the side of the adapter into the flange on the flashing as shown in Figure 51. Twist-lock the termination cap (980,991, 930) on to the cap adapter.

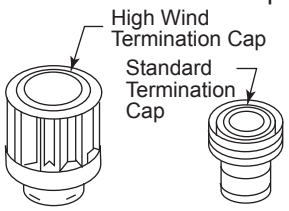

8. Attach the flex to the retro connector. Use three sheet metal screws to attach the flex liner to the connector. (Fig. 52) Mount the retro connector to the masonry wall using masonry bolts. Re-drill larger holes on connector as needed. Be careful to insure that the connector is centered in the opening and the mounting holes line up with the masonry wall.

Figure 51

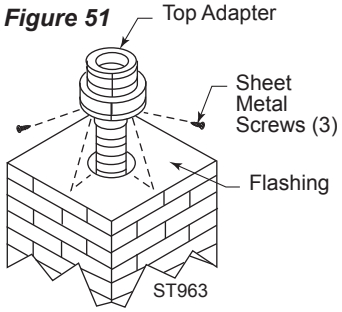

9. Slide the wall thimble cover (940) over the retro connector and secure the with masonry bolts as shown in Figure 53. If you have a framed wall in front of the masonry, use wood screws to mount the wall thimble cover to the framed wall, over the retro connector and the 10” (254 mm) square

Figure 52

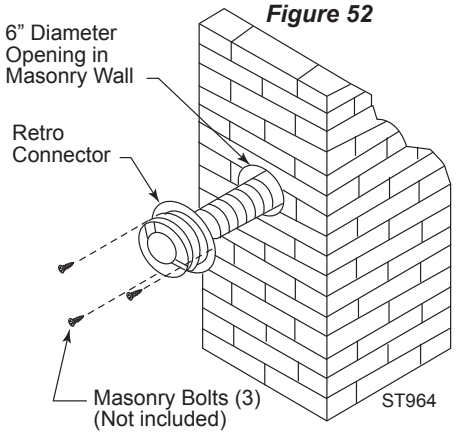

Figure 53

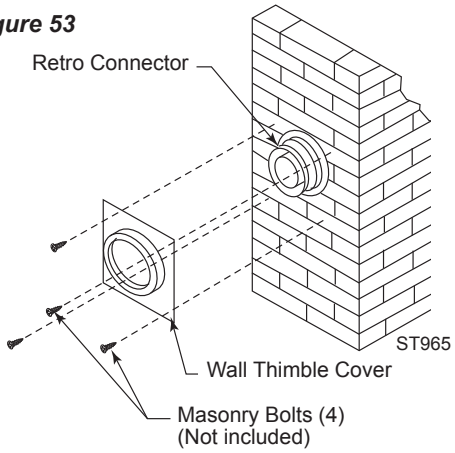

framed opening as shown in Figure 54. If needed, add a section of direct vent pipe to the retro connector in order to extend through the opening in the wall thimble cover.

10. The connection between the appliance and the retro connector may be completed with the section of black direct vent pipe, together with an adjustable length pipe section.

Figure 54

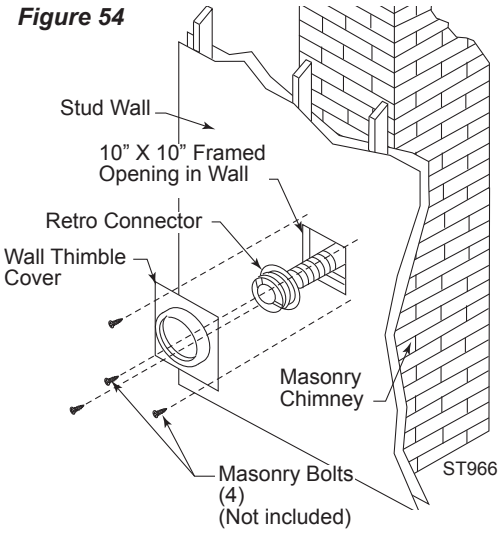

Connect the Gas Supply Line

Check the rating plate attached by a steel cable to the firebox, to confirm that you have the appropriate firebox for the type of fuel to be used. The Intrepid may be converted from one gas to another using the appropriate Fuel Conversion Kit listed on Page 42.

CAUTION

This appliance should only be connected by a qualified gas technician. Test to confirm manifold pressures as specified below.

The Intrepid Heater and the individual shutoff valves must be disconnected from the gas supply piping during any pressure testing of that system at test pressures in excess of 1/2 psig (3.5 kPa).

The Intrepid Heater must be isolated from the gas supply piping system by closing the individual manual shutoff valve during any pressure testing of the gas supply piping system at test pressure equal to or less than 1/2 psig.

There must be a gas shutoff between the stove and the supply.

In order to connect Natural Gas, use a fitting with 3/8" NPT nipple on the valve side and 1/2" natural gas supply line with a minimum input of 21,000 BTUs at a minimum inlet pressure of 5.5" w.c.

In order to connect Propane, use a fitting with 3/8" NPT nipple on the valve side and 1/2" propane gas supply line with a minimum input of 21,000 BTUs at a minimum inlet pressure of 11.0" w.c.

In the U.S.: Gas connection should be made in accordance with current National Fuel Gas Code, ANSI Z223.1/NFPA 54. Since some municipalities have additional local codes, be sure to consult your local authority.

In Canada: consult the local authority and CSA-B149.1 installation code.

Connect the gas supply and test for leaks. Use a mild soap and water solution applied with a brush no larger than 1" (25 mm). Never apply soap and water solution with a spray bottle. Do not use an open flame for leak testing.

Burner Information

The appliance must only use the gas specified on the rating plate, unless converted using a Vermont Castings Fuel Conversion Kit. Refer to Page 42 for correct Fuel Conversion Kit for your stove model.

Coversion instructions are provided with each kit and beginning on Page 34 of this manual.

THIS APPLIANCE SHOULD BE CONNECTED TO THE GAS SUPPLY ONLY BY A QUALIFIED GAS SERVICE TECHNICIAN. FOLLOW ALL LOCAL CODES.
THERE MUST BE A GAS SHUT-OFF BETWEEN THE STOVE AND THE SUPPLY.

Complete the Assembly

- Open the swiveling latches (cams) on the top left and right corners of the glass frame.
- Position the glass and frame against the firebox by placing the bottom edge on the brackets on the bottom face of the firebox.
- Swing the assembly against the firebox, and close the latches firmly against the pins protruding from the firebox top.

Install ON/OFF Switch

The switch assembly parts are found in the parts bag.

1. Apply wiring harness to the ON/OFF switch terminals then insert into cut out on switch housing. The ON/OFF switch will 'snap' into the cutout. (Fig. 55)
2. Run wires through cut out in side of shroud, under bottom of rear shroud to valve.
3. Using supplied #10 x 1/2" screws, attach switch housing over cut out opening in rear shroud.
4. Attach wires to valve terminals. (Fig. 56)

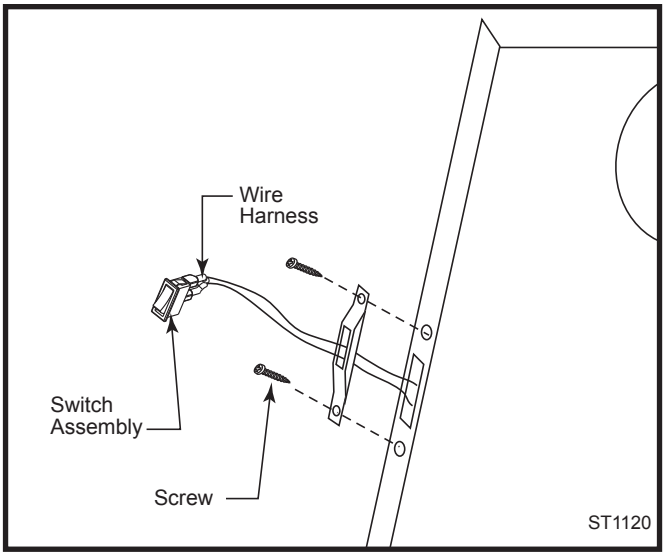

Fig. 55 Attach switch assembly to rear shroud.

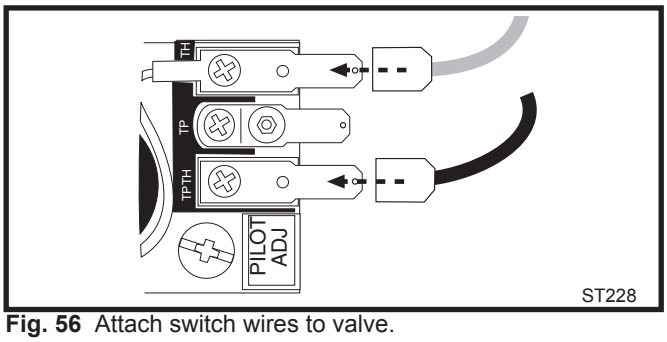

Fig. 56 Attach switch wires to valve.

Install the Front Plate

Grasp the Front Plate and lift it into position, engaging the two steel tabs at the upper corners behind the adjacent bosses in the Side Plates. (Fig. 57) Seat the Front against the Sides so that the tabs at the bottom lip engage with the notches in the edge of the stove base.

When properly installed, the bottom of the Front Plate cannot be pulled away from the sides without also lifting it up.

If you are installing optional Warming Shelves, do so now, according to the instructions supplied with that kit.

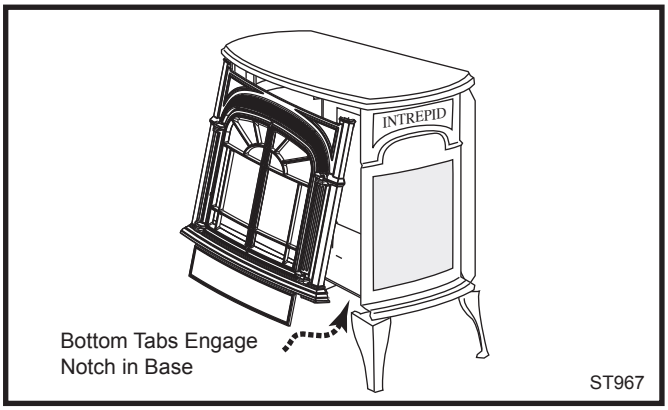

Fig. 57 Install stove front.

Thermostat Connection
(Optional) R Models Only

Use only a thermostat rated for 500 - 750 millivolts.

Check the table below for the appropriate gauge thermostat wire to use for the length of lead required in your installation.

Thermostat Wire / Gauge	Maximum Run
18	40 feet
20	25 feet
22	16 feet

1. Install the wall thermostat in the desired location and run the wires to the stove location. Terminate these leads with 1/4" female connectors.
2. Connect the thermostat wires to the valve. (Fig. 56)

This completes assembly of the Intrepid stove.

Install the Log Set

Remove the logs from their packaging and inspect each piece for damage. **DO NOT INSTALL DAMAGED LOGS.**

CAUTION: Before installation, inspect ember bed burner for damage. **Do not use** ember bed if damaged or cracked. **NOTE:** Small, shallow surface cracks are acceptable.

1. Install the rear log by matching the notch on the bottom left of the log on the raised notch on back left side of the ember bed. Cutout on bottom right side is clearance for pilot assembly. (Fig. 58) Gently push right side of log back until it contacts thermopile on pilot assembly.

Figure 58

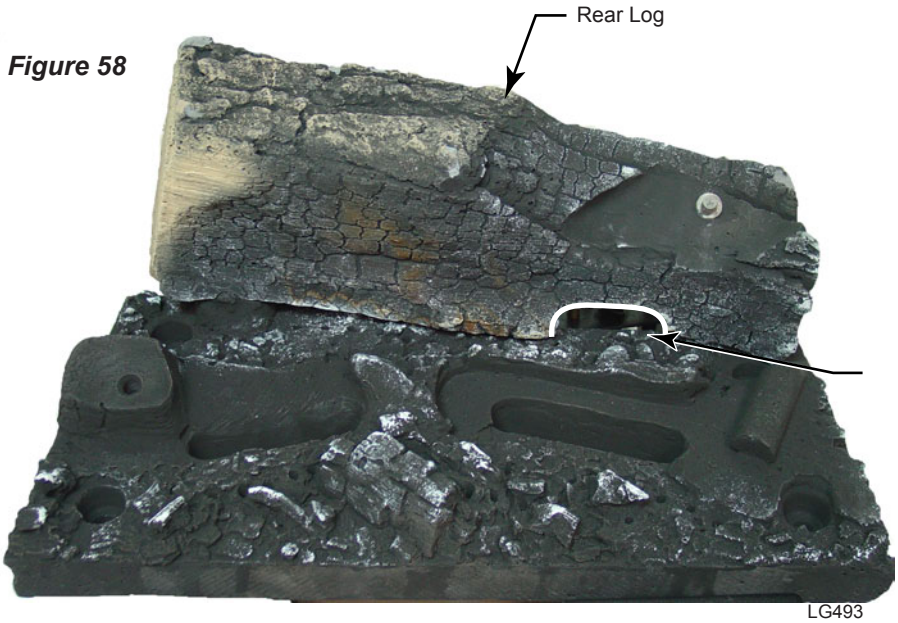

Figure 59

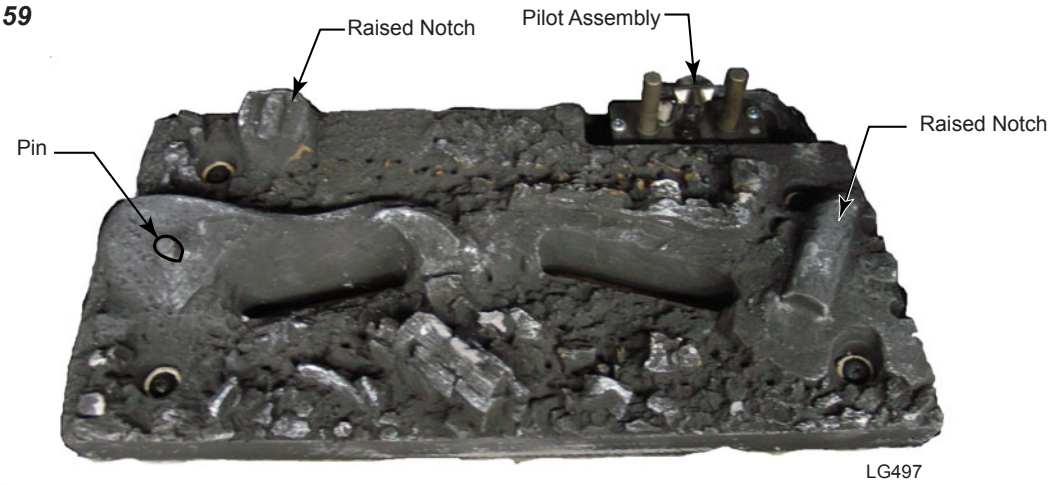

Figure 60

2. Place the left front log on the pin locator on ember bed. Position the log over the air inlet hole and on notched out portion of ember bed. (Fig. 60)
3. Place front right log on ember bed by mating notch on bottom of log with raised notch on ember bed. Position over the air inlet hole and on notched out portion of ember bed. (Fig. 60)

4. Install top log by mating hole on bottom of log with locating pin on top right side of rear log. (Fig. 61) Position log so it is angled down toward the area where the front two logs meet.

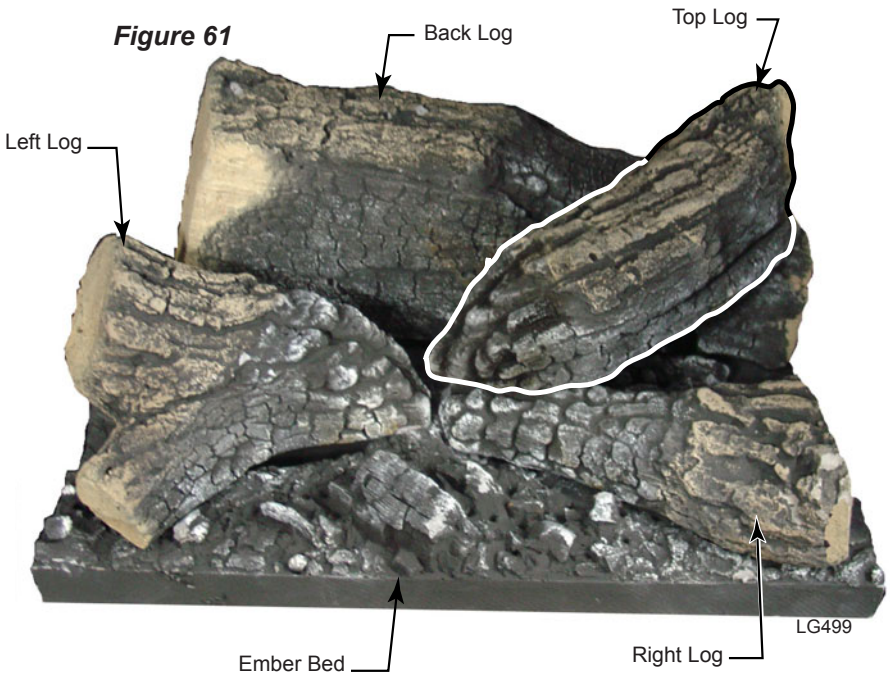

Figure 61

Operation

The Intrepid is operated with the operable door front plate in place with the doors open or closed. To open the front doors, pull either door toward you.

Your First Fire

Read these instructions carefully and familiarize yourself with the burner controls shown in Figure 62. Locate the pilot assembly, Figure 63. Follow the lighting instructions on Page 32 exactly.

During the first fire, it is not unusual to smell some odor associated with new logs, paint and metal being heated. Odors should dissipate within a few hours. You can open a window to provide fresh air to alleviate the condition.

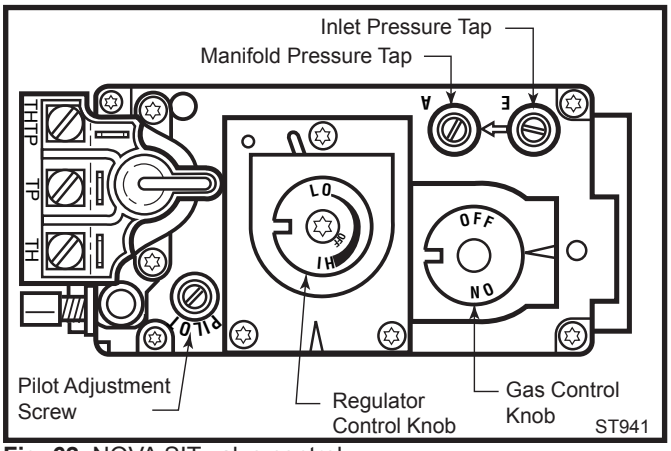

Fig. 62 NOVA SIT valve control.

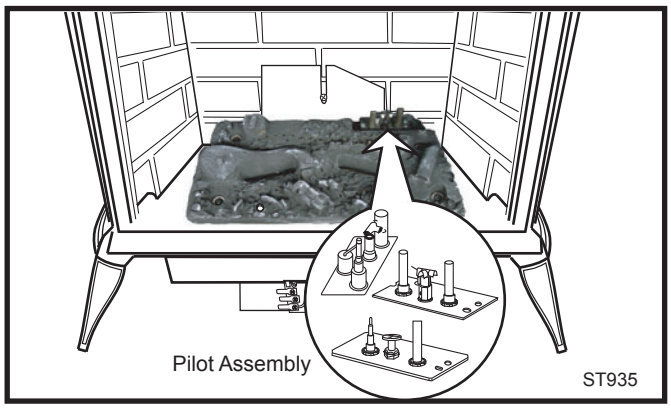

Fig. 63 Pilot Assembly location.

Pilot and Burner Inspection

Each time you light your heater check that the pilot flame and burner flame pattern are as shown in Figure 65. If flame patterns are incorrect, turn the heater off. Contact your dealer or a qualified gas technician for assistance. Do not operate the heater until the pilot flame is correct.

Follow regular maintenance procedures as described on Page 37.

Flame & Temperature Adjustment

For stoves equipped with HI/LO valves, flame adjustment is accomplished by rotating the HI/LO adjustment knob located near the center of the gas control valve. (Fig. 64)

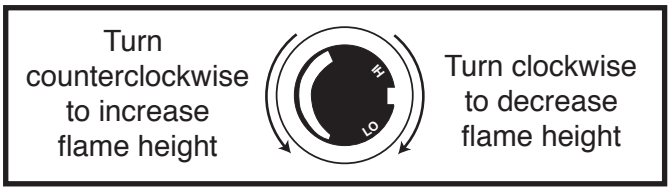

Fig. 64 Flame adjustment knob for SIT valve.

Flame Characteristics

It is important to periodically perform a visual check of the pilot and the burner flames. Compare them to Figure 65.

If any of the flames appear abnormal call a service person.

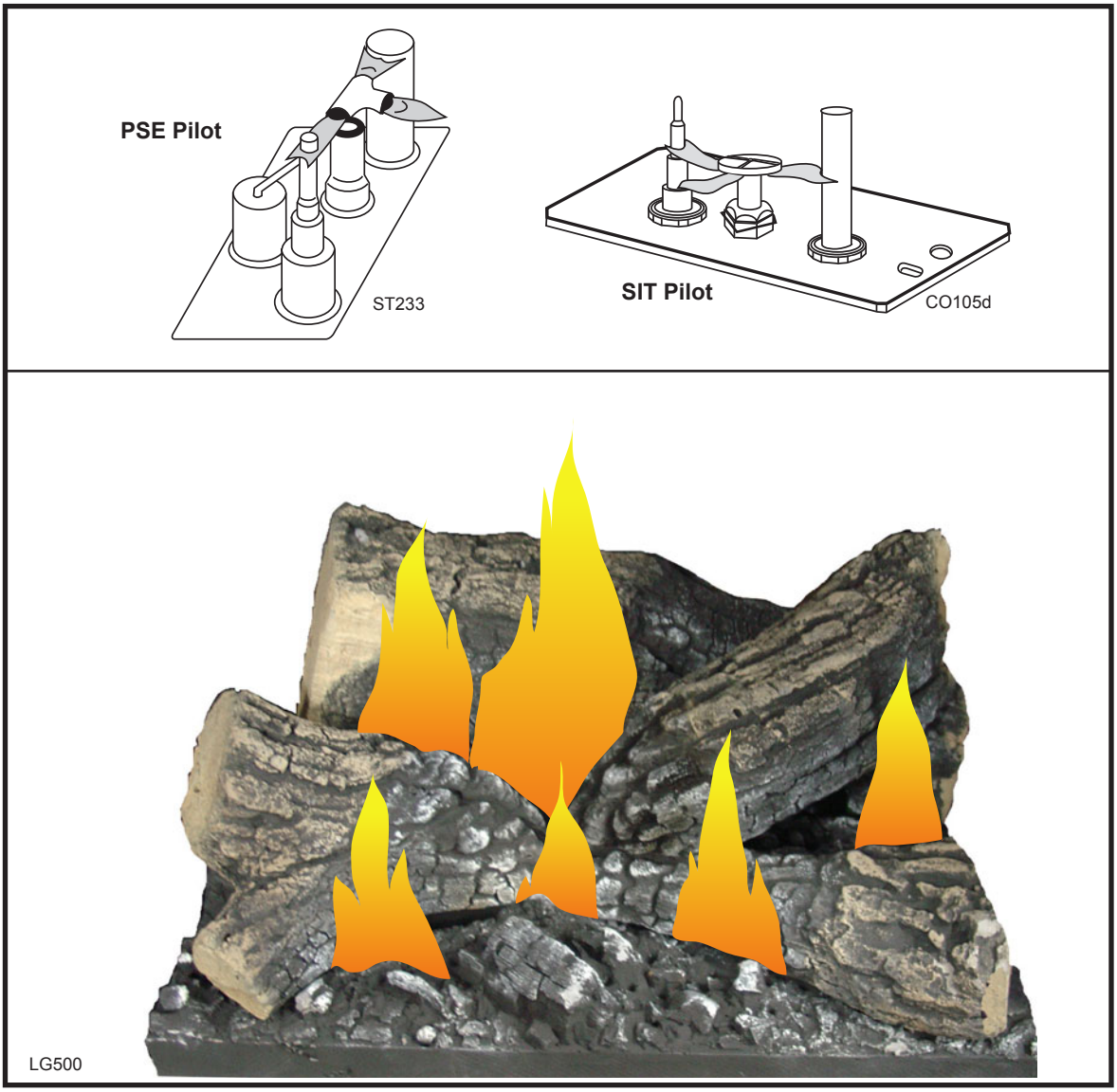

Fig. 65 Correct pilot and burner flame patterns.

Extension Knobs

On/Off and Hi/Lo control knob extensions have been included in the finish bag. These may be installed on the appropriate knob by aligning the notch on the existing knob (Fig. 62) with the tab on the inside of the extension knob (Fig. 66) Push the extension knob as far as it will go onto the existing knob.

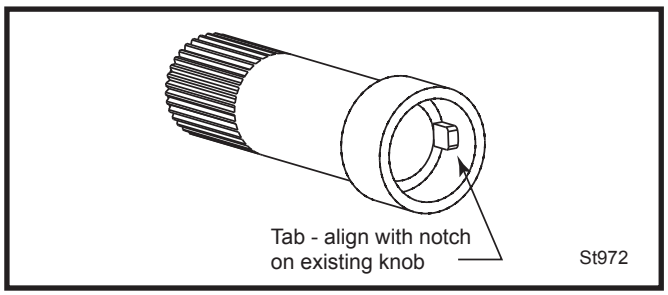

Fig. 66 Extension knob.

Lighting and Operating Instructions

FOR YOUR SAFETY READ BEFORE LIGHTING

WARNING:If you do not follow these instructions exactly, a fire or explosion may result causing property damage, personal injury or loss of life.

A. This heater has a pilot which must be lit manually. When lighting the pilot follow these instructions exactly.

B. BEFORE LIGHTING smell all around the heater area for gas. Be sure to smell next to the floor because some gas is heavier than air and will settle on the floor.

WHAT TO DO IF YOU SMELL GAS

- Do not try to light any fireplace
- Do not touch any electric switch
- Do not use any phone in your building
- Immediately call your gas supplier from a neighbor's phone. Follow the gas supplier's instructions.
- If you cannot reach your gas supplier, call the Fire Department

C. Use only your hand to push in or turn the gas control knob. Never use tools. If the knob will not push in or turn by hand, do not try to repair it, call a qualified service technician. Applying force or any attempted repair may result in a fire or explosion.

D. Do not use this fireplace if any part has been under water. Immediately call a qualified service technician to inspect the heater and to replace any part of the control system and any gas control which has been under water.

Lighting Instructions

1. **STOP!** Read the safety information above.
2. Turn off all electrical power to the fireplace.
3. Turn the On/Off switch to "OFF" position, set the remote to OFF or set thermostat to lowest level.
4. Open control access panel.
5. Push in gas control knob slightly and turn clockwise ↷ to "OFF".

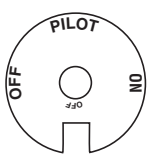

SIT NOVA

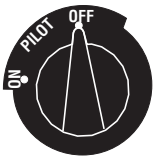

Honeywell

6. Remove glass door before lighting pilot. (See Glass Frame Removal section).
7. Wait five (5) minutes to clear out any gas. Then smell for gas, including near the floor. If you smell gas, STOP! Follow "B" in the safety information above. If you do not smell gas, go to the next step.
8. Visibly locate pilot by the main burner.
9. Turn knob on gas control counterclockwise ↶ to "PILOT".
10. Push the control knob all the way in and hold. Immediately light the pilot by repeatedly depressing the piezo spark ignitor until a flame appears. Continue to hold the control knob in for about one (1) minute after the pilot is lit. Release knob and it will pop back up. Pilot should remain lit. If it goes out, repeat steps 5 through 8.

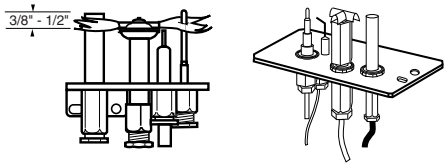

- If knob does not pop up when released, stop and immediately call your service technician or gas supplier.
- If after several tries, the pilot will not stay lit, turn the gas control knob to "OFF" and call your service technician or gas supplier.

11. Replace glass door.
12. Turn gas control knob to "ON" position.
13. Turn the On/Off switch to "ON" position or set thermostat to desired setting.
14. Turn on all electrical power to the fireplace.

To Turn Off Gas To Heater

1. Turn the On/Off switch to Off position or set the thermostat to lowest setting.
2. Turn off all electric power to the fireplace if service is to be performed.
3. Open control access panel.
4. Push in gas control knob slightly and turn clockwise ↷ to "OFF". Do not force.
5. Close control access panel.

Troubleshooting the Gas Control System

SIT NOVA 820 MILLIVOLT VALVE

NOTE: Before trouble shooting the gas control system, be sure external gas shut off is in the “On” position.

Symptom	Possible Causes	Corrective Action
1. Spark ignitor will not light	A. Defective or misaligned electrode at pilot	Using a match, light pilot. If pilot lights, turn off pilot and push the red button again. If pilot will not light - check gap at electrode and pilot-should be 1/8” to have a strong spark.
	B. Defective ignitor (Push Button)	With the control knob in the pilot position, push the control knob all the way and hold. Check for spark at electrode and pilot. If no spark to pilot, and electrode wire is properly connected, replace the battery in the ignitor module and try again. Refer to Maintenance Section. If the problem still exists, replace the ignitor module box.
2. Pilot will not stay lit after carefully following lighting instructions	A. Defective pilot generator (thermocouple), remote wall switch	Check pilot flame. Must impinge on thermocouple/thermopile. NOTE: This pilot burner assembly utilizes both a thermocouple and a thermopile. The thermocouple operates the main valve operation (On and Off). Clean and or adjust pilot for maximum flame impingement on thermopile and thermocouple.
	B. Defective automatic valve	Turn valve knob to “Pilot”. Maintain flow to pilot; millivolt meter should read greater than 10mV. If the reading is okay and the pilot does not stay on, replace the gas valve. NOTE: An interrupter block (not supplied) must be used to conduct this test.
3. Pilot burning, no gas to main burner	A. Wall switch or wires defective	Check wall switch and wires for proper connections. Jumper wire across terminals at wall switch, if burner comes on, replace defective wall switch.. If okay, jumper wires across wall switch wires at valve, if burner comes on, wires are faulty or connections are bad.
	B. Thermopile may not be generating sufficient millivoltage	1. Be sure wire connections form thermopile at gas valve terminals are tight and thermopile is fully inserted into pilot bracket. 2. One of the wall switch wires may be grounded. Remove wall switch wires form valve terminals if pilot now stays lit, trace wall switch wiring for ground. May be grounded to fireplace or gas supply. 3. Check thermopile with millivolt meter. Take reading at thermopile terminals of gas valve. Should read 250-300 millivolts (minimum 150) while holding valve knob depressed in pilot position and wall switch “Off”. Replace faulty thermopile if reading is below specified minimum.
	C. Plugged burner orifice	Check burner orifices for debris and remove.
	D. Defective automatic valve operator	Turn valve knob to “On”, place wall switch to “On” millivolt meter should read greater than 150mV. If the reading is okay and the burner does not come on, replace the gas valve.
4. Frequent pilot outage problem	A. Pilot flame may be too low or blowing (high) causing the pilot safety to drop out	Clean and/or adjust pilot flame for maximum flame impingement on thermopile and thermocouple.
	B. Possible blockage of the vent terminal	Check the vent terminal for blockage (recycling the flue gases).

Fuel Conversion Instructions

WARNING! This conversion kit shall be installed by a qualified service agency in accordance with the manufacturer's instructions and all applicable codes and requirements of the authority having jurisdiction. If the information in these instructions is not followed exactly, a fire, explosion or production of carbon monoxide may result causing property damage, personal injury or loss of life. The qualified service agency is responsible for the proper installation of this kit. The installation is not proper and complete until the operation of the converted appliance is checked as specified in the manufacturer's instructions supplied with the kit.

CAUTION: The gas supply shall be shut off prior to disconnecting the electrical power, before proceeding with the conversion.

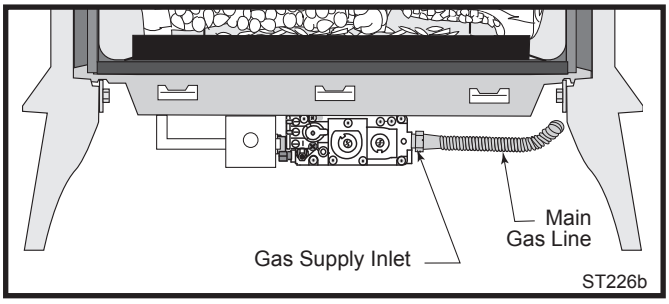

Fig. 67 Attach the gas line to the right side of the valve.

Conversion Precautions

Before proceeding, turn control knob on valve to OFF and turn gas supply OFF. Turn OFF any electricity that may be going to the appliance.

Conversion Procedure

1. Remove stove front. Lift stove front up and then swing bottom out and away to disengage from the stove body. (Page 37, Fig. 81)
2. Swing open the swiveling latches at the top left and right corners of the glass frame. (Page 38, Fig. 82)
3. Pull the top edge of the glass and frame assembly away from the firebox face. Place the assembly out of the way on a flat, padded surface such as a counter protected by a towel.
4. Remove the logset from the firebox.

Valve Conversion

1. Turn control knob to the OFF position, and shut off the gas supply to the valve.
2. Allow the valve to cool to room temperature.
3. Remove the black protection cap by hand. (Fig. 68)
4. Insert a 5/32" or 4 mm Allen wrench into the hexagonal key-way of the screw (Fig. 69), rotate it counterclockwise until it is free and extract it.
5. Check that the screw is clean and if necessary remove dirt.
6. Flip the screw. (Fig. 70)
7. Using the Allen wrench as shown in Figure 71, rotate the screw clockwise and tighten until snug.

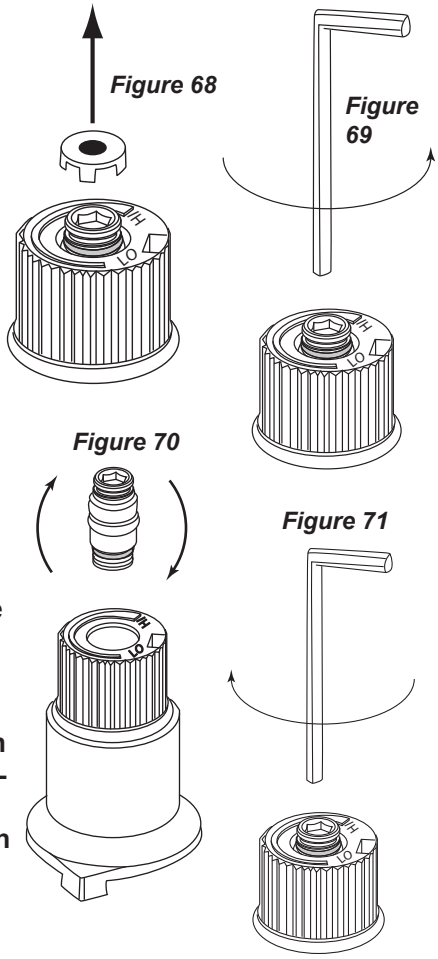

WARNING: Do not overtighten the screw. Recommended to grip the wrench by the short side.

8. Verify that if the conversion is from NG to LP, the screw must be reassembled with the red o-ring visible. (Fig. 72)
9. Replace the black protection cap.

WARNING: Check that also the pilot and main burner injectors are appropriate for the gas type.

Figure 72

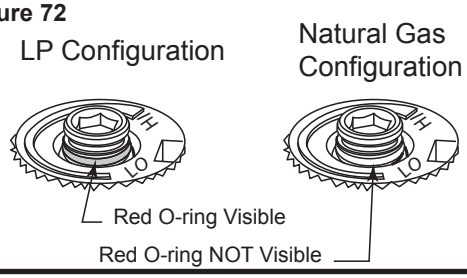

Pilot Orifice Conversion

1. Locate pilot. (Fig. 73)
2. Replace pilot orifice.

Pilot Type 1

- Remove pilot hood by lifting up. (Fig. 74) Do not remove snap ring to remove pilot hood. **NOTE:** It is not necessary to remove the pilot tube for conversion.

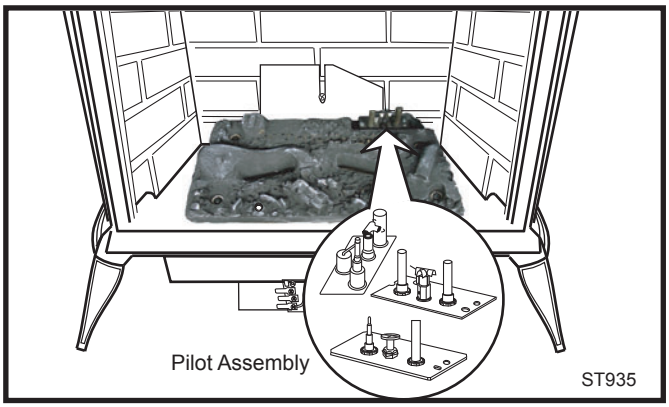

Fig. 73 Pilot Assembly location.

- Remove pilot orifice with Allen wrench. (Fig. 75)
- Install the conversion orifice.
- Reinstall pilot hood. Be sure to align hood with index tab.

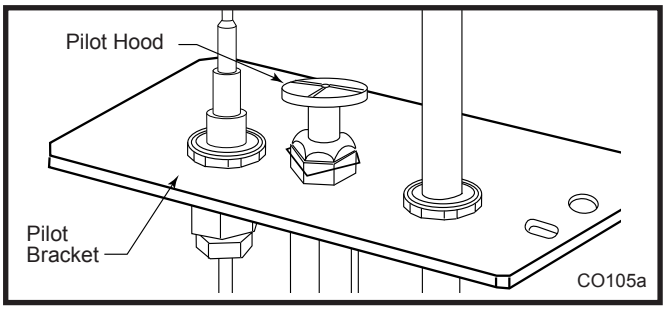

Fig. 74 Remove pilot hood.

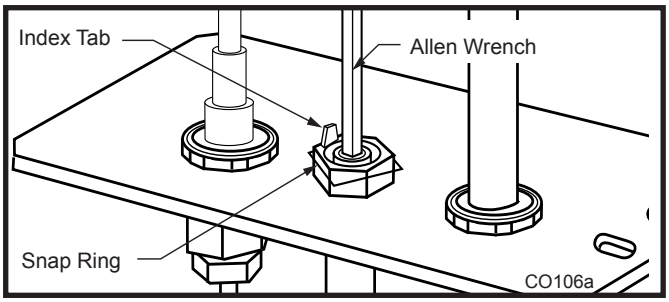

Fig. 75 Remove pilot orifice.

Pilot type 2

- Loosen pilot hood turning counterclockwise using a 7/16” wrench. (Fig. 76) **NOTE:** You may use penetrating oil to prevent pilot hood threads from seizing up.
- Remove pilot orifice with needlenose pliers. (Fig. 77) **NOTE:** Use a wrench to hold pilot tube in place while removing the orifice.
- Install the conversion orifice.
- Reinstall pilot hood and tighten until mark on pilot hood aligns with mark on pilot bracket.

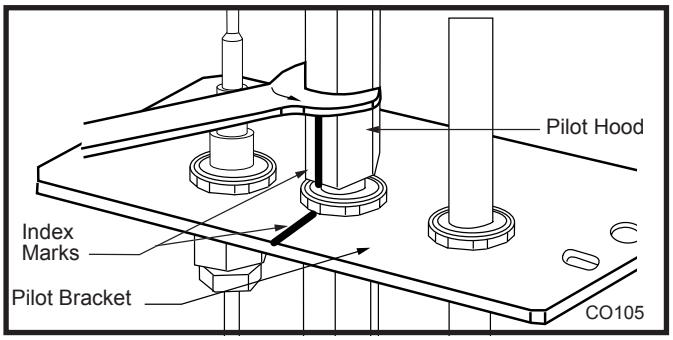

Fig. 76 Remove pilot hood. (Your pilot may have a different appearance.)

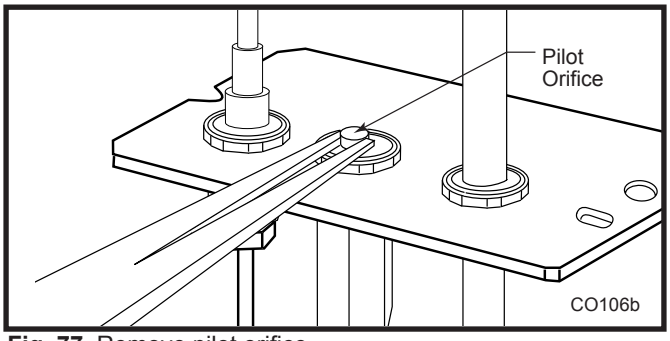

Fig. 77 Remove pilot orifice.

Burner Orifice Conversion

1. Remove three (3) 3/8” nuts on bottom side of burner pan. (Fig. 78)
2. Carefully remove ember bed by tilting the right side up and lifting out toward the right side of the unit. (Fig. 79)

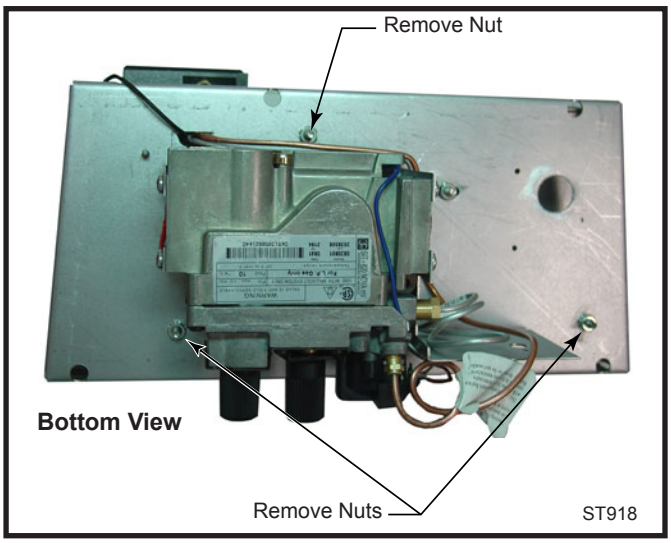

Fig. 78 Remove three (3) nuts securing ember bed in place.

3. Remove injector orifice from left burner bracket with a 1/2” wrench.
4. Install conversion orifice. (Refer to Table 3)
5. The air shutter is factory set according to table on Page 7 and should not need adjustment. The air shutter opening may be verified by measuring as shown in Figure 80.

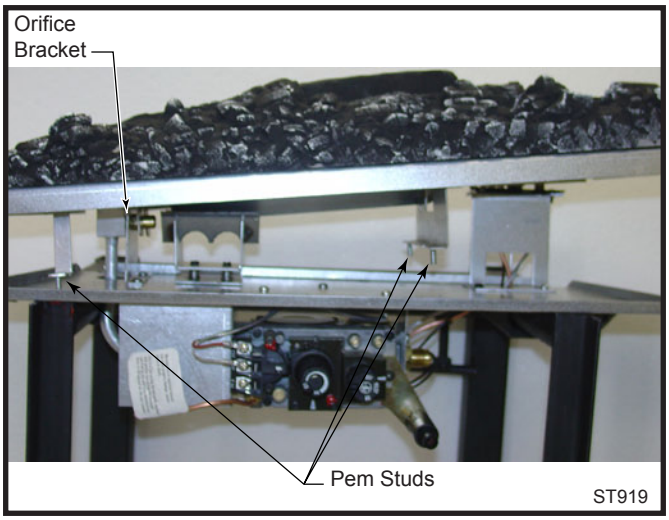

Fig. 79 Tilt ember bed slightly to correctly place on venturi and air shutter.

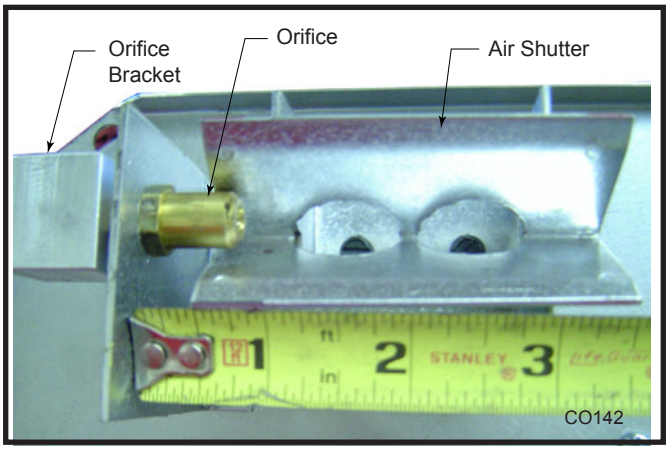

Fig. 80 The air shutter setting is 1/2" (13 mm) from the orifice bracket to the edge of the air shutter.

All Models

1. Replace burner making sure venturi on bottom of ember bed aligns with orifice and is seated properly on air shutter assembly. (Fig. 79) Make sure burner is slid into place at a slight angle and opposite to how it was removed. When burner is slid into place, the three (3) pem studs should slide down through clearance holes into the bottom of the control panel.
2. Thread and tighten 3/8" nuts back onto pem studs on underneath side of control panel, reversing Step 1 shown in Figure 78.
3. Reinstall logs as per instructions on Page 29.
4. Place conversion label on valve.
5. Replace glass and stove front.
6. Restore gas to system and relight appliance according to Lighting Instructions on Page 32.
7. Leak check the system using a gas leak detector solution.
8. Relight the main burner in both the "HI" and "LO" positions to verify proper burner ignition and operation.

Conversion is complete.

Table 3. Injector Orifice Size Matrix

Conversion to LP				
			Input (BTU/h)	
Kit #	Orifice	Part #	Minimum	Maximum
20012921	#56 (.0465")	30000336	12,000	16,000
Conversion to Natural Gas				
			Input (BTU/h)	
Kit #	Orifice	Part #	Minimum	Maximum
20012910	#47 (.0785")	20003054	12,500	18,500

Maintenance

Your Intrepid Gas Heater will provide years of service with minimal upkeep. The following procedures will help ensure that your stove continues to function properly.

Annual System Inspection

Have the entire heater and venting system inspected annually by a qualified gas technician. Replace any worn or broken parts.

Logset and Burner Cleaning and Inspection

Cleanliness is critical to the proper function of the heater. The logset and burner must all be kept free of dust and unobstructed by debris. Inspect these areas before each use and clean as necessary.

1. Turn the burner OFF and let the heater cool completely before cleaning.
2. Lift the Stove Front up and then swing the bottom out to disengage it from the heater shell. (Fig. 81)
3. Carefully remove the glass and frame assembly and place it out of the way on a flat, padded surface such as a counter protected by a towel.
4. Carefully inspect the Logs for damage. Contact your local dealer if any damage is evident. **DO NOT OPERATE THE HEATER WITH DAMAGED LOGS.**
5. Use a soft bristled brush to sweep dust or debris from the Logs, Pilot and Burner. Use care as the logs are fragile and susceptible to damage.
6. Replace the glass panel and frame assembly.
7. Replace the Stove Front.

Care of Cast Iron

An occasional dusting with a dry rag will help keep the *painted surfaces* looking new. Use high-temperature stove paints, available through your local dealer, to touch-up areas as needed. Clean areas to be painted with a wire brush and be sure to cover the logs, burner and valve assembly, glass and frame assembly. Apply the paint sparingly; two light coats of paint will give better results than a single heavy coat.

Clean *porcelain enamel surfaces* with a soft, damp cloth. Do not use abrasive cleaning agents. If necessary, use only a cleaning agent formulated especially for use on porcelain enamel surfaces.

CAUTION

TURN THE PILOT OFF BEFORE PAINTING. ALLOW THE HEATER TO COOL COMPLETELY BEFORE PAINTING.

WARNING

HOT GLASS WILL CAUSE BURNS.

DO NOT TOUCH GLASS UNTIL COOLED.

NEVER ALLOW CHILDREN TO TOUCH GLASS.

Cleaning the Glass

WARNING: Let the glass cool completely before attempting to clean.

It will be necessary to clean the glass periodically. During start-up, condensation, which is normal, forms on the inside of the glass and causes lint, dust and other airborne particles to cling to the glass surface. Also initial paint curing may deposit a slight film on the glass. It is therefore recommended that the glass be cleaned two or three times with a non-ammonia household cleaner and warm water (we recommend gas fireplace glass cleaner). After that the glass should be cleaned two or three times during each heating season depending on the circumstances present.

Clean glass after first two weeks of operation.

Glass Replacement

Replace glass only with MHSC approved parts. Refer to Page 40 for Replacement Parts. Refer to Figure 82 and previous instructions for removal of the damaged glass frame.

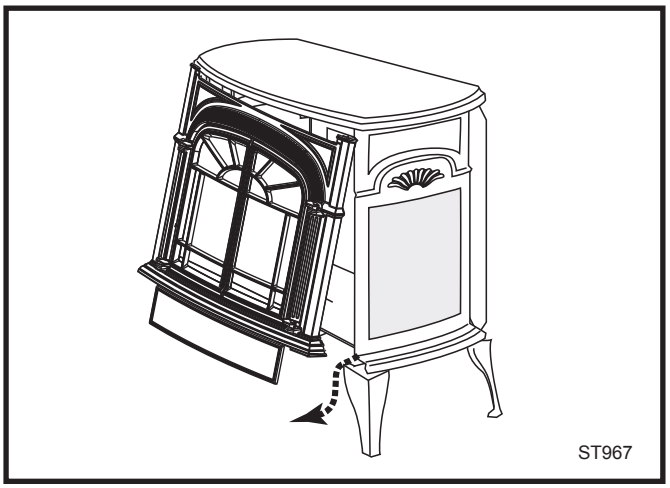

Fig. 81 Remove the stove front.

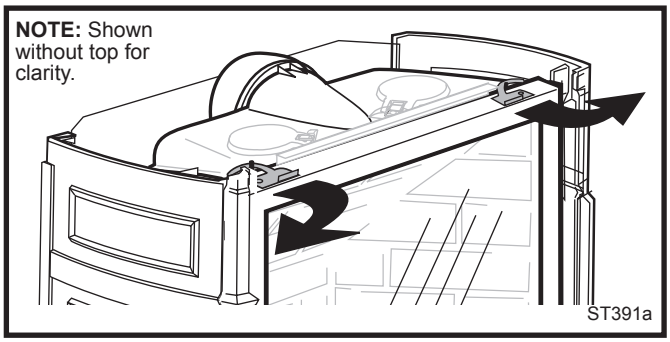

Fig. 82 Release the latches to release the glass frame.

Gasket Replacement

The Intrepid Gas Heater uses a 'tadpole' type gasket to seal between the glass panel and the frame. In time, this gasket can become brittle and compressed and should be replaced. New gasket is available from your dealer.

Shut off the gas supply and allow the stove to cool. Wear safety goggles and a dust mask.

1. Remove the Front, Glass Frame and Glass Panel. (Figs. 81, 82) Remove the old gasket. Use a razor blade to separate the glass and gasket from the frame, and to clean the glass of any remaining cement or bits of gasket. Use a cold chisel if necessary.
2. Determine the correct length of gasket by laying it out around the edge of the glass. Allow an extra 1 - 2" (25-50 mm). Mark the spot to be cut. Use a utility knife.
3. Starting on a long edge, remove about 6" of the protective paper strip and apply the flat adhesive face of the gasket around the outside-facing edge of the panel. Continue around the panel, applying about 6" at a time and being careful to not stretch the material. Do not overlap the gasket ends. (Fig. 83)
4. Apply a thin bead of high temperature silicone rubber sealant along the inside corner of the glass frame, all around the perimeter. Place the flat gasketed side of the glass panel back into the steel frame. Pinch the rounded inside-facing gasket material to bulk it up.
5. Replace the glass frame and front panel as previously described.

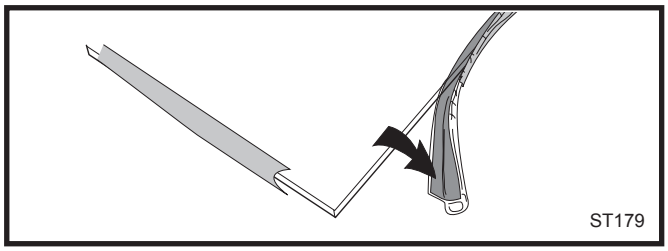

Fig. 83 Wrap the gasket material around the outside edge of the glass.

Inspect the Vent System Annually

Have the vent system inspected annually by a qualified technician. Shut off the main gas supply before inspecting the system. Both the inner exhaust pipe and the outer combustion supply pipe must be checked to confirm that they are unblocked and in good condition.

Check the Gas Flame Regularly

To ensure the stove is operating properly, check the flames periodically to confirm they match Page 31, Figure 65. The flames will be blue during the first 15-20 minutes of operation, and will gradually turn to yellow after that.

Do not use your stove if the flame pattern differs from that shown here. Contact your Vermont Castings dealer or a qualified technician for help.

Stove Disassembly

If there is ever a need to remove the firebox assembly from the stove shell, support the firebox with solid stands about 6" (152 mm) tall under the left and right outer edges of the firebox base. Do not set the firebox assembly directly on the floor; this can damage the control valve and/or the gas lines from the valve to the firebox.

Before removing the firebox from the shell, disconnect the on/off switch wires from the valve. If the assembly includes the optional fan, disconnect the fan rheostat. If the installation includes a wall thermostat, disconnect the thermostat leads from valve.

Disconnection and reconnection to the gas line should only be done by a qualified gas service technician.

Upon reinstallation, the vent system must be sealed to the firebox as discussed in the venting section. Also be sure the logs are placed in the firebox correctly, as shown on Page 29, Figures 58-61.

Wiring Diagrams

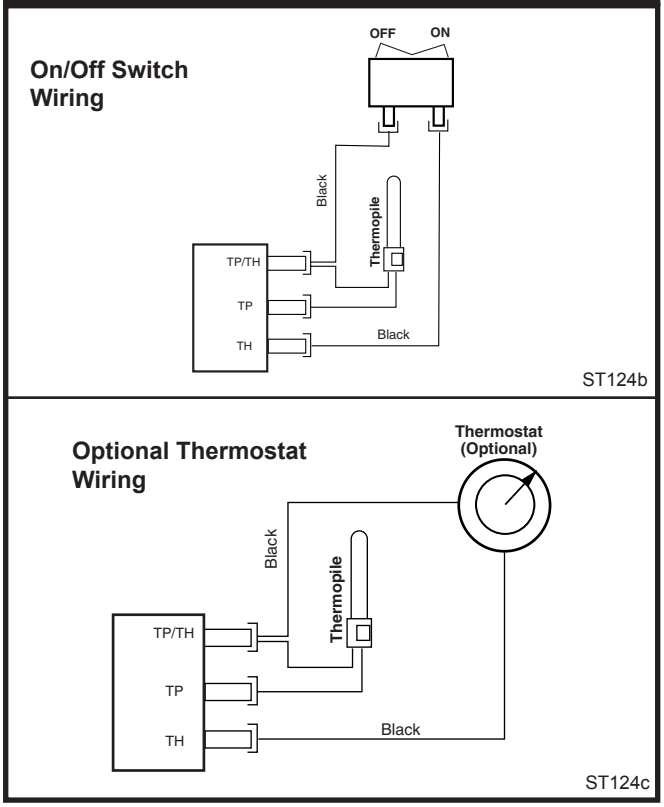

Fig. 84 On/off switch and optional thermostat circuit.

NOTE: IF ANY OF THE ORIGINAL WIRE, AS SUPPLIED WITH THE APPLIANCE, MUST BE REPLACED, IT MUST BE REPLACED WITH TYPE SF-2, 200°C WIRE OR ITS EQUIVALENT.

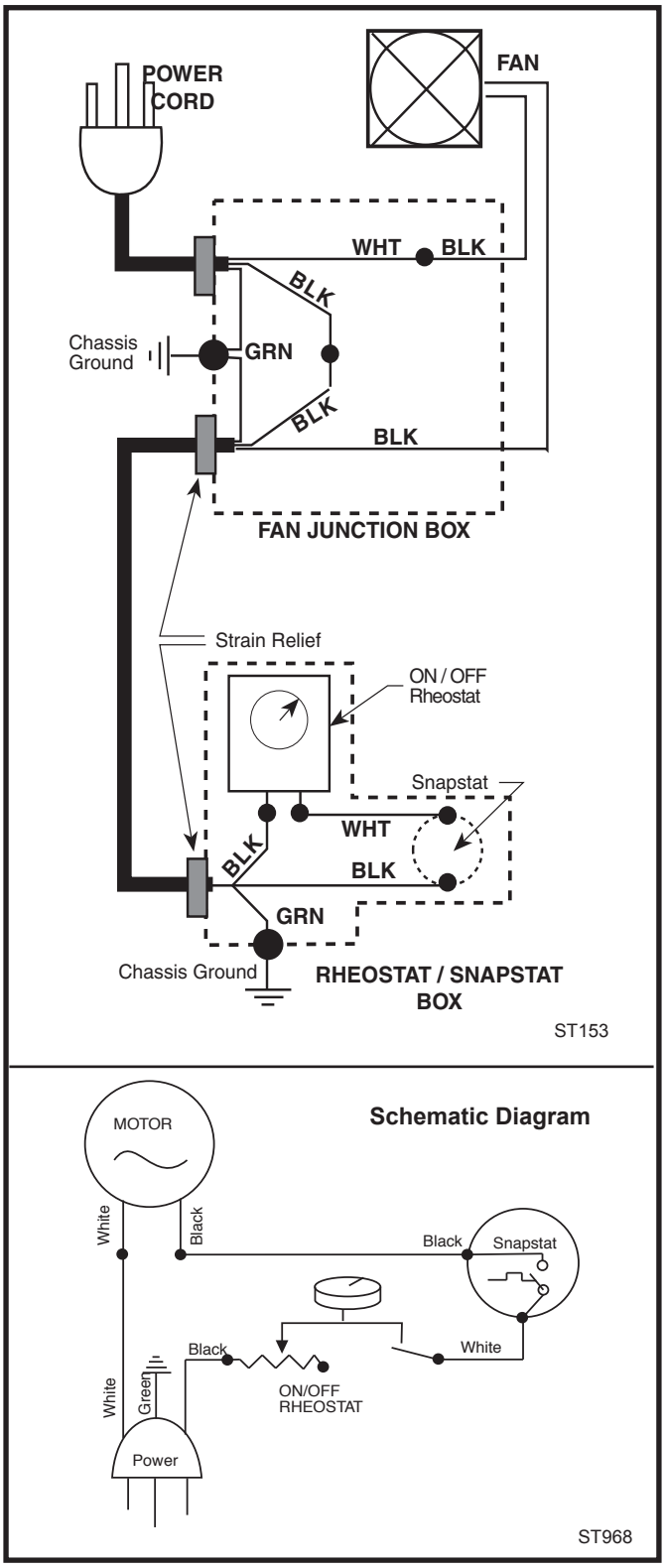

Fig. 85 Fan circuit.

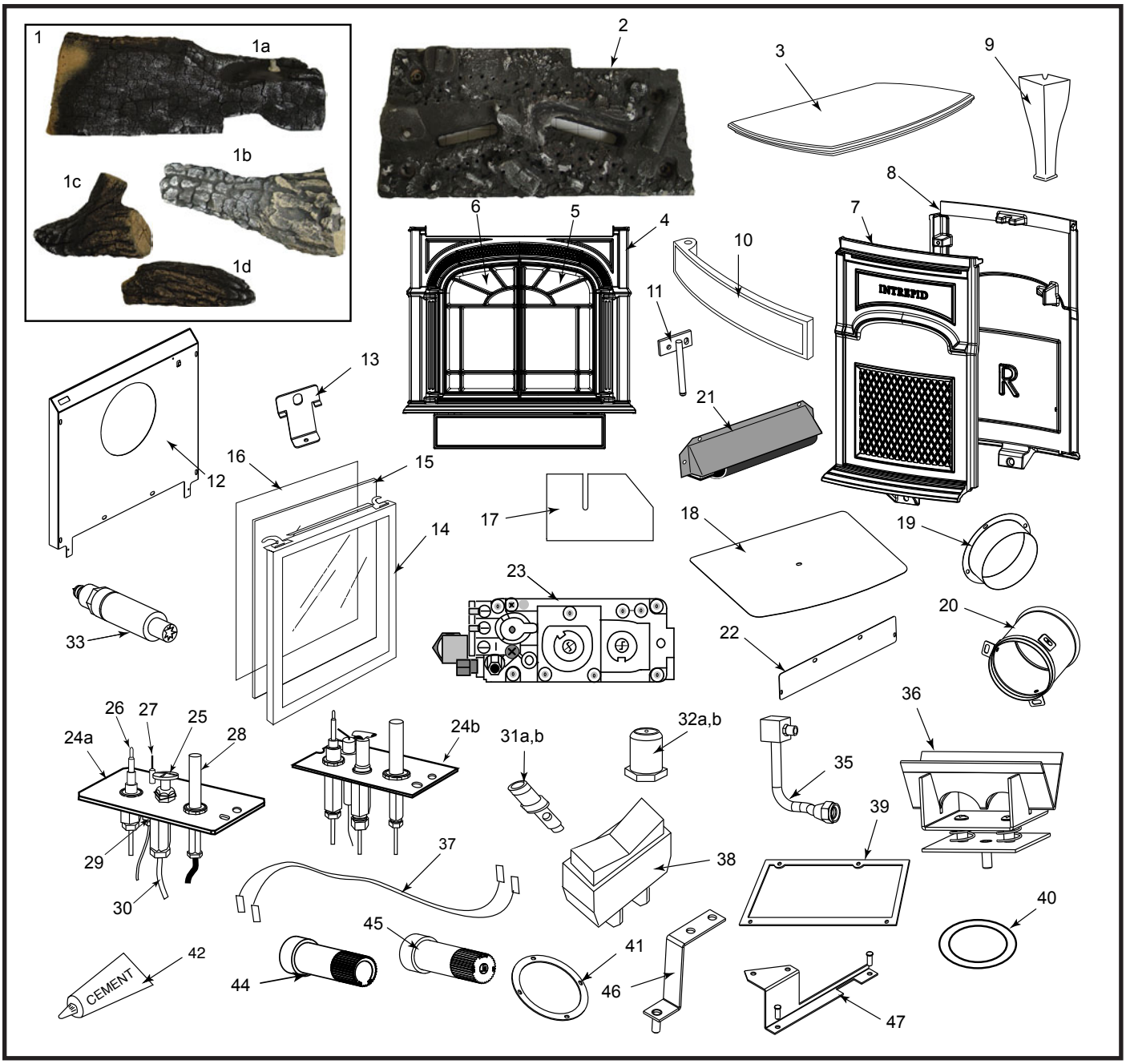

MHSC reserves the right to make changes in design, materials, specifications, prices and discontinue colors and products at any time, without notice.

Intrepid Direct Vent/Rear Vent Gas Heater:

Models: INDVRCB, INDVREB, INDVRMB, INDVRBS, INDVRCH, INDVRVG, INDVRBD, INDVRBB, INDVRCG, INDVRGG, INDVRSG, INDVRBM

Ref.	Description	Intrepid
1.	Log Set - Complete	20012552
1a.	Log Rear	20013111
1b.	Log Right	20012549
1c.	Log Left	20013112
1d.	Log Top	20013113
2.	Ember Bed Assembly	20012906
3.	Top	Refer to Enamel Parts Chart
4.	Front, Operable Door	Refer to Enamel Parts Chart

Intrepid Direct Vent/Rear Vent Gas Heater: (continued)

Models: INDVRCB, INDVREB, INDVRMB, INDVRBS, INDVRCH, INDVRVG, INDVRBD, INDVRBB, INDVRCG, INDVRGG, INDVRSG, INDVRBM

Ref.	Description	Intrepid
5.	Door Right	Refer to Enamel Parts Chart
6.	Door Left	Refer to Enamel Parts Chart
7.	Left End	Refer to Enamel Parts Chart
8.	Right End	Refer to Enamel Parts Chart
9.	Leg	Refer to Enamel Parts Chart
10.	Door, Control	30003945
11.	Hinge, Control Door	1601670
12.	Rear Shroud Assembly	30004132
13.	Clip, Rear Shroud	30004002
14.	Glass Frame Assembly	30004068
15.	Glass	30004067
16.	Gasket, Glass - Med. Knit	1203702
17.	Restrictor Plate	20013026
18.	Heat Shield Top	30004128
19.	Collar, Duravent	30004131
20.	Starter 4”	30004130
21.	FK20 Fan Subassembly	
22.	Fan Cover Shroud	30004014
23.	Valve Nova SIT820.852	20012218
24a.	Pilot Assembly 3Way N/DV RN 0.199.706 Pilot Assembly 3Way N/DV RP 0.199.703	10002264 10002265
24b.	Pilot, PSE - NA175 Pilot, PSE - LP175	20001115 20001116
25.	Pilot Top Convertible	10002266
26.	Thermocouple 24”	7531137
27.	Electrode Ignitor w/Cable SIT24	10001297
28.	Thermopile 18” RS	7533113
29.	Nut Electrode SIT #0.974.144	57886
30.	Tubing Pilot w/Fittings 1/8 x 24”	10001296
31a.	Pilot Orifice #62 - NG Top Convertible	10002268
31b.	Pilot Orifice #35 - LP Top Convertible	10002269
32a.	Orifice Hood - LP (#56/.0465”)	30000336
32b.	Orifice Hood - Nat. (.0795”)	20013155
33.	Ignitor Piezo w/Nut SIT	52464
34.	Bracket Piezo Ignitor (not shown)	20010876
35.	Manifold Assembly	20012918
36.	Air Shutter Assembly	20012517
37.	Wiring Harness	10002582
38.	Trim ON/OFF Switch	30000874
39.	Gasket, Control Plate	30004200
40.	Gasket, HE Door	1203687
41.	Gasket, Flue Collar	30004021
42.	Gasket Cement	1206122
43.	*Magnet, Door (not shown)	1408818
44.	Knob Extension - Hi/Lo	55162
45.	Knob Extension - On/Off	55163
46.	Tie Bracket Assembly	20012514
47.	Right Burner Support Assembly	20012909
48.	Switch Housing	30005040

*Use common super glue or silicone to attach magnets.

Intrepid Direct Vent/Rear Vent Gas Heater: (continued)

Models: INDVRCB, INDVREB, INDVRMB, INDVRBS, INDVRCH, INDVRVG, INDVRBD, INDVRBB, INDVRCG, INDVRGG, INDVRSG, INDVRBM

Fuel Conversion Kits

Conversion Kit, NG to LP	Kit #20012921
Conversion Kit, LP to NG	Kit #20012910

Shell Enamel Part Numbers - Intrepid							
Color	**Top**	**Left End**	**Right End**	**Front**	**Left Door**	**Right Door**	**Leg**
Classic	30003930	30003934	30003935	30003931	30003932	30003933	1306333
Biscuit	30004239	30004237	30004238	30004240	30004241	30004242	30003182
Bordeaux	30004257	30004255	30004256	30004258	30004259	30004260	2326333
Brown Majolica	30004921	30004919	30004920	30004922	30004924	30004925	30004918
Chestnut Brown	30004245	30004243	30004244	30004246	30004247	30004248	30003192
Ebony	30004227	30004225	30004226	30004228	30004229	30004230	30003202
Midnight Blue	30004233	30004231	30004232	30004234	30004235	30004236	2376333
Vermont Classic Green	30004251	30004249	30004250	30004252	30004253	30004254	30003212
Brick Blue	30004263	30004261	30004262	30004264	30004265	30004266	30003545
Country Cookware Gray	30004269	30004267	30004268	30004270	30004271	30004272	30003555
Granite Gray	30004275	30004273	30004274	30004276	30004277	30004278	30003565
Sage Green	30004281	30004279	30004280	30004282	30004283	30004284	30003575

Optional Accessories

Fan Kits

FK20 Fan

The fan helps distribute heated air from within the firebox out into the room. The fan is controlled by a snapstat that turns power on and off as the firebox temperature rises above and falls below a preset temperature. A rheostat provides for variable fan speeds.

Specifications

115 Volt / 60Hz / .75 Amps

Maintenance

The fan itself does not require regular maintenance, however, periodic cleaning of the fan and the surrounding area is required.

Installation

Refer to Page 13 for installation instructions.

Remote Controls

The remote control allows you to turn the heater on or off from anywhere in the room. Refer to Page 38 for wiring diagrams. These remote controls are for use on RN/RP model stoves.

Model	Functions Controlled
RC1	ON/OFF
RC2	ON/OFF and Temperature
IMTFK	Wall mounted thermostat control

Warming Shelf

Warming shelves add versatility to your stove; they can be used to keep foods warm at mealtime.

Model	Color
0000098	Classic Black
1371	Bordeaux
1372	Midnight Blue
1373	Brown Majolica
1376	Biscuit
1377	Chestnut Brown
1378	Ebony
1379	Vt. Classic Green

The shelf installation is completed in three stages. First attach the shelf loosely to the stove, leaving the screws loose enough to allow final adjustments. Then, position the shelf and adjust the brackets so the shelf fits correctly. Finally, tighten the screws.

Refer to the instructions included with each warming shelf for complete installation procedures.

LIMITED LIFETIME WARRANTY

PRODUCT COVERED BY THIS WARRANTY

All Vermont Castings brand gas stoves, gas inserts, and gas fireplaces installed in the United States of America or Canada.

LIMITED LIFETIME WARRANTY

MHSC warrants that all cast iron parts, the combustion chamber, ceramic burner, and heat exchanger of every Vermont Castings gas product will be free of defective material or workmanship during the period the product is owned by the original owner subject to proof of purchase and the conditions and limitations listed on this warranty document.

BASIC ONE-YEAR WARRANTY

MHSC warrants to the original owner that your new Vermont Castings Gas Appliance is free from defects in material or workmanship for a period of one year from the date of purchase, subject to the following conditions and limitations. Labor to replace these parts is covered for one year, reimbursed per our warranty service fee schedule.

COMPONENT WARRANTY LIMITATATIONS

PORCELAIN ENAMEL FINISHED PARTS: MHSC offers no warranty on chipping of enamel surfaces. Inspect all products prior to accepting them for any damage to the enamel. The salt air environment of coastal areas or a high humidity environment can be corrosive to the porcelain enamel finish. These conditions can cause rusting of the cast iron beneath the porcelain enamel finish, which will cause the finish to flake off. Color lot variations with parts and/or accessories can occur and are not covered by warranty.

GLASS: Glass is not warranted for breakage due to misuse or accident. Glass is not covered for discoloration or stains due to environmental issues, or improper cleaning and maintenance.

PLATED PARTS AND ACCESSORIES: Brass, nickel, and gold parts should be cleaned with Lemon oil only. Commercial cleaners cannot be used. Mortar mix and masonry cleaners corrode the brass finish. The MHSC will not be responsible for, nor will it warrant any brass parts which are damaged by external chemicals or down draft conditions.

ACCESSORIES: Unless otherwise noted, MHSC supplied accessories are covered for a period of one year.

GENERAL CONDITIONS AND LIMITATIONS

- This Vermont Castings product must be installed or serviced by a qualified installer, preferably NFI or WETT (Canada) certified, as prescribed by the local jurisdiction. It must be installed and operated at all times in accordance with the Installation and Operating instructions furnished with the product. Any alteration, willful abuse, accident, or misuse of the product shall nullify this warranty.
- This warranty is non-transferable, and is made to the original owner, provided that the purchase was made through an authorized supplier of Vermont Castings branded MHSC products.
- Parts covered under the Limited Lifetime Warranty will be covered for the lifetime of the appliance up to a maximum of seven (7) years after MHSC discontinues the model. The maximum amount recoverable under this warranty is limited to the purchase price of the product and, if MHSC is unable to provide replacement or repair in an expedient and cost effective manner, MHSC may discharge all obligations under this warranty by refunding the purchase price of the product.
- Any labor and related repair charges relating to the cost and expenses of replacing or repairing defective components under the Limited Lifetime Warranty are not covered, except as provided for under the Basic One-Year Warranty.
- Any part or component replaced under the provisions of this warranty is covered for six months or the remainder of the original warranty, whichever is longest.
- Any installation, labor, construction, transportation, or other related costs/expenses arising from defective part(s), repair, replacement, or otherwise of same, will not be covered by this warranty, nor shall the Company assume responsibility for same. **IN NO EVENT SHALL MHSC BE LIABLE FOR ANY INCIDENTAL OR CONSEQUENTIAL DAMAGES CAUSED BY DEFECTS IN THE PRODUCT except as provided by law**
- SOME STATES DO NOT ALLOW FOR THE EXCLUSION OR LIMITATIONS OF INCIDENTAL AND CONSEQUENTIAL DAMAGES OR LIMITATIONS ON HOW LONG AN IMPLIED WARRANTY LASTS, SO THE ABOVE LIMITATIONS MAY NOT APPLY TO YOUR CIRCUMSTANCES. THIS WARRANTY GIVES YOU SPECIFIC RIGHTS AND YOU MAY HAVE OTHER RIGHTS WHICH VARY FROM STATE TO STATE.
- All other warranties expressed or implied with respect to the product, its components and accessories, or any obligations/liabilities on the part of the Company are hereby expressly excluded.
- The Company neither assumes, nor authorizes any third party to assume on its behalf, any other liabilities with respect to the sale of this Vermont Castings product
- The warranties as outlined within this document do not apply to chimney components or other non MHSC accessories used in conjunction with the installation of this product.
- Damage to the unit while in transit is not covered by this warranty but is subject to claim against the common carrier. Contact the dealer from whom you purchased your fireplace/stove (do not operate the appliance as this might negate the ability to process the claim with the carrier).
- The Company will not be responsible for:

a) Down drafts or spillage caused by environmental conditions such as near-by trees, buildings, roof tops, hills, or mountains.

b) Inadequate ventilation or negative air pressure caused by mechanical systems such as furnaces, fans, clothes dryers, etc.

- This warranty is void if:

a) The fireplace has been operated in atmospheres contaminated by chlorine, fluorine, or other damaging chemicals.

b) The fireplace has been subjected to prolonged periods of dampness or condensation

c) Any damages to the fireplace, combustion chamber, heat exchanger or other components due to water, or weather damage, which is the result of but not limited to, improper chimney/venting installation.

d) Any alteration, willful abuse, accident, or misuse of the product has occurred.

IF WARRANTY SERVICE IS NEEDED...

Contact your installing Vermont Castings dealer. Make sure you have your warranty, your sales receipt, the model number and serial number of your MHSC product. If you're the installing dealer is unknown or unable to provide necessary parts or service, a list of Authorized Vermont Casting dealers can be located on the internet at www.vermontcastings.com

Canada

ENERGUIDE

Look for the EnerGuide Gas Fireplace Energy Efficiency Rating in this brochure

Based on CSA P.4.1-09

Efficiency Ratings	
Model	**EnerGuide Ratings Fireplace Efficiency (%)**
INDVR	68.0

NATIONAL FIREPLACE INSTITUTE®

NFI

CERTIFIED

www.nficertified.org

We recommend that our gas hearth products be installed and serviced by professionals who are certified in the U.S. by the National Fireplace Institute® (NFI) as NFI Gas Specialists.

MHSC

149 Cleveland Drive • Paris, Kentucky 40361

www.mhsc.com