This Owner's Manual is provided and hosted by Appliance Factory Parts.

Appliance Factory Parts
Experts in BBQ, Humidifier, & Appliance Parts
1-800-955-7075

Vermont Castings INTREPID INDVRBM Owner's Manual

Shop genuine replacement parts for Vermont Castings INTREPID INDVRBM

Find Your Vermont Castings Wood or Gas Stove Parts - Select From 53 Models

-------- Manual continues below --------

PRODUCT SPECIFICATIONS

Intrepid Direct Vent Gas Stove

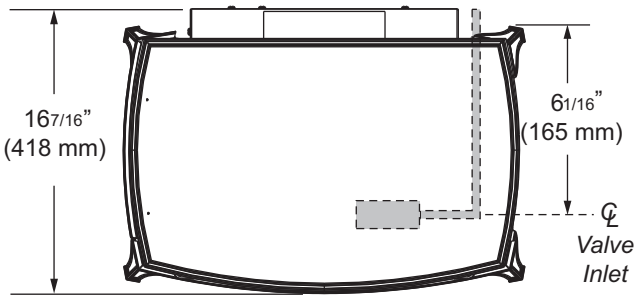

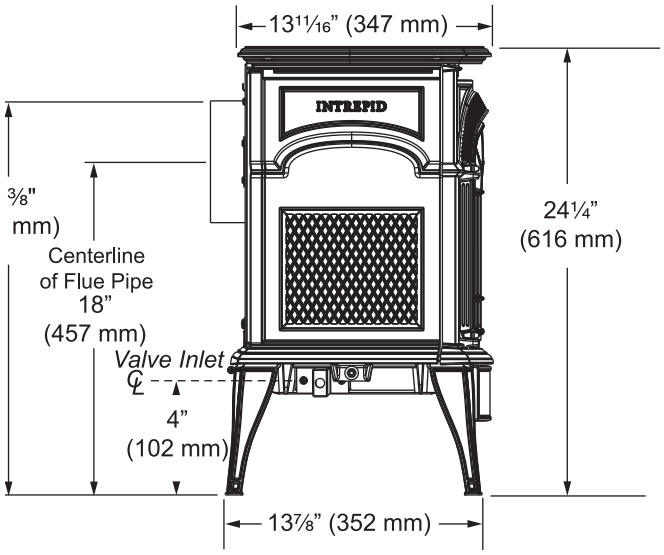

DIMENSIONS

Height: 24-1/4"
Width: 21-3/4"
Depth: 13-7/8"

TECHNICAL INFORMATION

BTU Input High: 18,500 NG/16,000 LP
BTU Input Low: 12,500 NG/12,000 LP
Steady State Efficiency Rating: 78%
EnerGuide Efficiency Ratings: 68%
Weight: 185lbs
Warming Shelf: Each 7"W (front) x 10"L (side)
CSA Design Certified

FIELD INSTALLED ACCESSORIES

Ambient Technologies™ Remote Controls and Thermostats, fire screen for use with operable front doors
Decorative warming shelves add to the authentic heritage
Available in: Classic Black or four enamel colors: Bordeaux, Biscuit, Majolica Brown and Ebony Black
Variable speed, heat-activated fan kit for standard models

MADE IN U.S.A.

A Brand of Monessen Hearth Systems Co.
149 Cleveland Drive, Paris, Kentucky 40361
www.vermontcastings.com

To avoid personal injury or property damage, the product described by this brochure must be installed, operated and maintained in strict compliance with the instructions packaged with the product and all applicable building or fire codes. Contact local building or fire officials about restrictions and installation inspection requirements. All photographs and drawings on this brochure are for illustrative purposes only and are not intended for, nor should they be used as a substitute for the instructions packaged with the unit. Appearance and specifications of the product are subject to change without notice. © 2010 Monessen Hearth Systems Co.

Ver. 01