This Owner's Manual is provided and hosted by Appliance Factory Parts.

Appliance Factory Parts
Experts in BBQ, Humidifier, & Appliance Parts
1-800-955-7075

# Jade Dynasty RJGR4863C Owner's Manual

Shop genuine replacement parts for Jade Dynasty RJGR4863C

Find Your Jade Dynasty Gas Range Parts - Select From 23 Models

-------- Manual continues below --------

# INSTALLATION INSTRUCTIONS

## JADE GAS RANGE

# MODEL RJGR

**PLEASE READ THIS MANUAL COMPLETELY AND CAREFULLY BEFORE PROCEEDING.**

**IMPORTANT**: Save these instructions for local inspector's use.
**IMPORTANT**: Observe all governing codes and ordinances.
**NOTE TO THE INSTALLER**: Please leave this manual with the range for the consumer.
**NOTE TO THE CONSUMER**: Please retain this manual for future reference.

**IMPORTANT**

The installation of this range must conform with local codes or, in the absence of local codes, with the National Fuel Gas Code ANSI Z223.1 - latest edition. If installed in Canada, installation must conform with local codes, or with CAN/CGA B149.1, Natural Gas Installation Code or CAN/CGA B149.2 Propane Gas Installation Code.
This appliance must be electrically grounded in accordance with local codes or, in the absence of local codes, with the National Electrical Code, ANSI/NFA 70- latest edition. In Canada, it must be electrically grounded in accordance with local codes or with CSA C22.1 Canadian Electrical Code Part 1.

WARNING: If the information in this manual is not followed exactly, a fire or explosion may result causing property damage, personal injury or death.

- Do not store or use gasoline or other flammable vapors and liquids in the vicinity of this or any other appliance.

WHAT TO DO IF YOU SMELL GAS

- Do not try to light any appliance.
- Do not touch any electrical switch; do not use any phone in the building.
- Immediately call your gas supplier from a neighbor's phone. Follow the gas supplier's instructions.
- If you cannot reach your gas supplier, call the fire department.
- Installation and service must be performed by a qualified installer, service agency or the gas supplier.

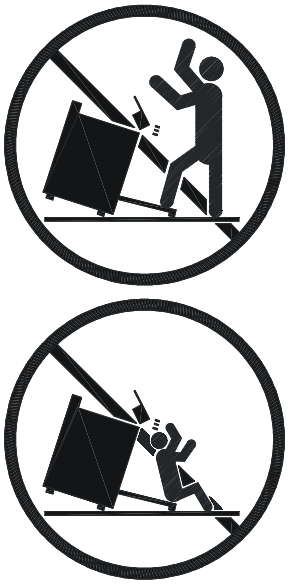

**⚠ WARNING**

- **THIS RANGE CAN TIP.**
- **INJURY TO PERSONS CAN RESULT.**
- **INSTALL THE ANTI-TIP BRACKET PACKED WITH RANGE.**
- **FOLLOW THE INSTALLATION INSTRUCTIONS ON PAGE 15.**

7355 E. SLAUSON AVENUE, COMMERCE, CALIFORNIA 90040 (323) 889-4888 Fax: (323) 889-4890

MADE IN USA

# IMPORTANT SAFETY INSTRUCTION

## CONTENTS


| | PAGE |
|---|---|
| Important Safety Instructions | 1-2 |
| Unpacking and Inspection | 2 |
| Range Specifications | 3 |
| Legs Installation | 3 |
| Casters Installation | 4 |
| Curb Base Installation | 5 |
| Stub Back Installation | 6 |
| Clearances Against Combustible Surfaces | 7 |
| Gas Connection | 8 |
| Gas Conversion For RJGR Series | 9-10 |
| Electrical Connection | 11 |
| Initial Start-up and Burner Adjustment | |
| Open top / Simmer | 12 |
| Infrared Broiler | 13 |
| Oven | 13 |
| Wok | 14 |
| Charbroiler | 14 |
| Griddle | 14 |
| Installation of Anti-Tip Bracket | 15-16 |


If the range is to be installed on an area covered with linoleum or any other floor covering, make sure that the floor covering can withstand 90°F (65°C) above room temperature without warping, shrinking or discoloring. Do not install the range over carpeting.

Do not use this range as a supplement to your furnace/heater. It is not designed to heat up the kitchen nor any other room. Using this appliance other than its intended use could be dangerous.

# UNPACKING AND INSPECTION:

Check that the container is upright. Check for visible damages on the carton. If there is damage to the carton, contact the carrier, and request an inspection. Do not refuse shipment but file the appropriate freight claims. Responsibility for shipping damage is with the carrier and dealer or end user.

Cut the shipping straps and carefully lift the carton up from the range. Check the range for visible damage.

Remove, unwrap and temporarily lay aside any part or accessory shipped with the unit and make sure that there are no hardware or accessories left in the box for accidental disposal. **Make sure all packing material and literature are removed from the oven before connecting gas and electrical supply to the range.**

# RANGE SPECIFICATIONS

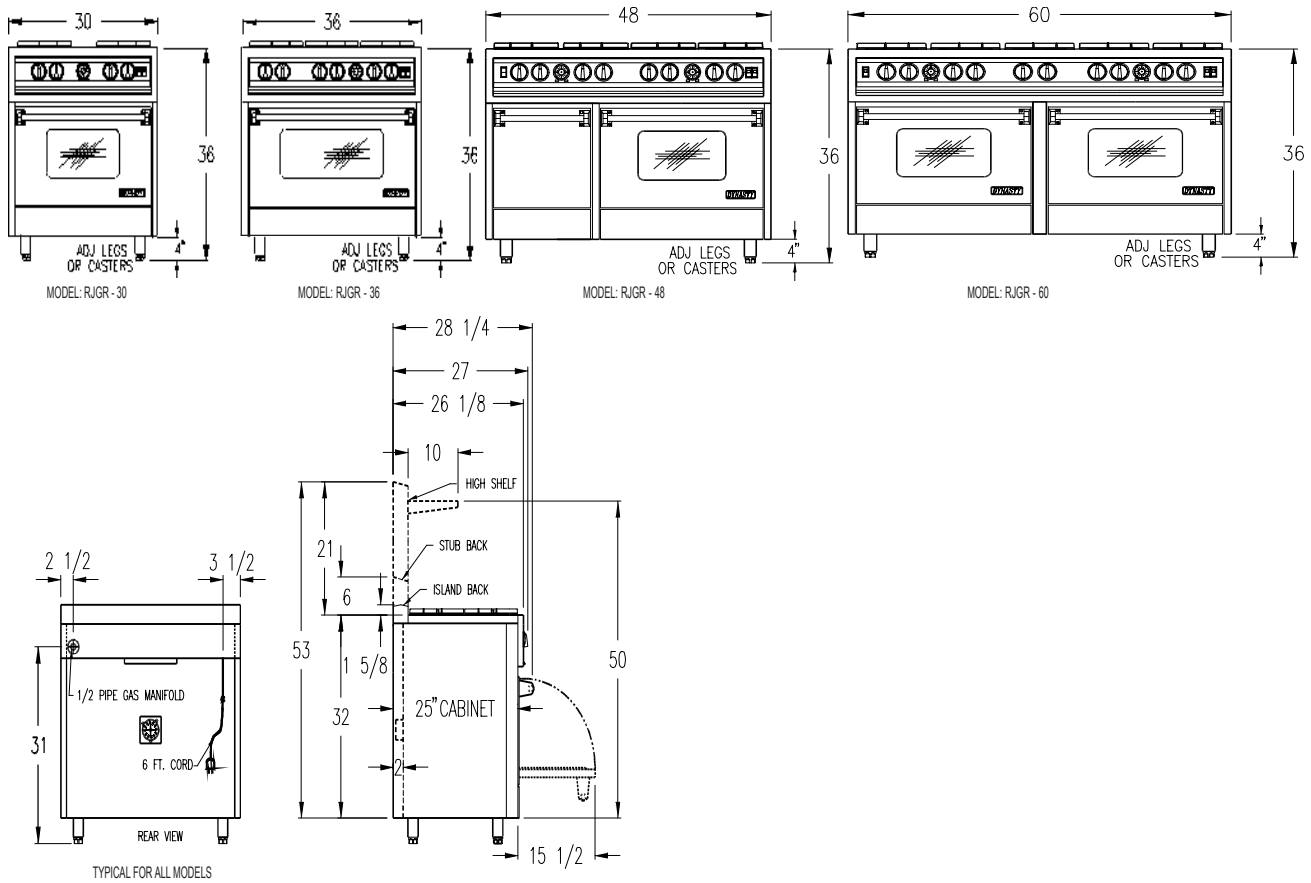


# LEGS INSTALLATION

The stainless steel legs are wrapped and packed separately in the oven. The legs must be installed near where the range is to be used to avoid pushing or sliding the range that could cause damage to the legs and to the floor covering. To install the legs it is strongly recommended that a lift jack be used to lift the range completely. Then screw the legs tightly to the bottom of the range. The distance between the top of the range (not including the cast iron grates) to the floor must be at least 36 inches. The legs can be adjusted up to 2 inches higher by turning the stainless steel adjustable feet using a 1" open end or adjustable wrench. Adjust the legs so that the top of the range is even or higher than the counter top.

IMPORTANT:
NEVER SET THE RANGE LOWER THAN THE COUNTER TOP. THE HEAT FROM THE TOP BURNERS CAN DAMAGE THE COUNTER TOP.

For proper baking results, it is important that the range is leveled. To level the range:

1. Use a 1" open end or adjustable wrench. Turn the adjustable feet equally until the top of the range is even or higher than the counter top.
2. Install the oven racks.
3. Put a spirit level or a glass measuring cup partially filled with water on one of the oven racks.
4. Adjust the legs' feet using the wrench.

# CASTERS INSTALLATION:

Casters are used for easy access in servicing or cleaning the appliance. However, unlike the legs, casters are not adjustable. Any adjustment needed for leveling the range is accomplished by placing shims on the floor. When checking to see if the range is level, always use a spirit level or glass measuring cup placed on one of the racks. It is extremely important for proper baking results that the racks are leveled.

When installing casters, it is strongly recommended that a lift jack be used to lift the range completely. Install the two casters without brakes to the rear. Install the two casters with brakes to the front for accessibility.

After the range is set and leveled on its final location, set the caster brakes on to prevent movement of the range under normal use.

IMPORTANT: The top of the range must be even or higher than the counter top. The heat from the top burners can damage the counter top.

When the appliance is installed with casters, it must be installed with the casters supplied, a connector complying with ANSI Z21.69 and a quick disconnect device complying with ANSI Z21.41. It must also be installed with restraining means to guard against transmission of strain to the connector.

Below is a typical restraining device.

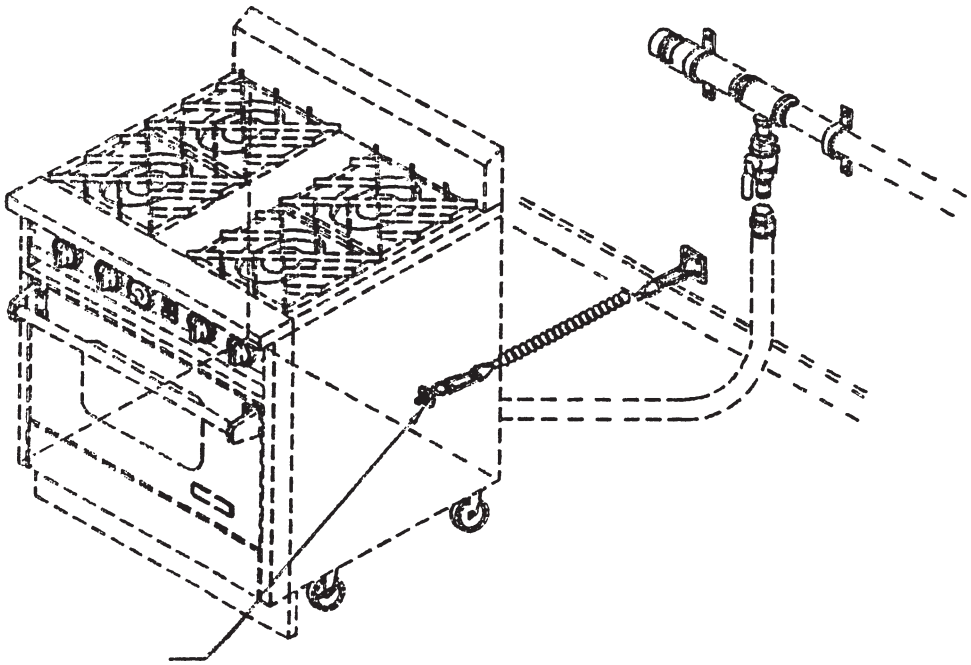

# CURB BASE INSTALLATION

The curb base must be installed after the range has been leveled and set properly in its final location.
To install the curb base, simply remove the kick plate (the panel immediately below the oven door) and locate the mounting holes at the front of the range base. Secure the curb base to the front of the range base using the two hexagonal sheet metals screws provided with the curb base. If the legs are adjusted to the minimum height of 4 inches, the curb base can have 0 to 1/8 gap between the floor. When the legs are adjusted higher, the gap can be as high as 2 inches which may not be visually objectionable and not need a filler. If a filler is desired, build a filler attached to the floor or to the adjacent cabinets using screws or other removable fasteners, so that the range can be readily removed if necessary.

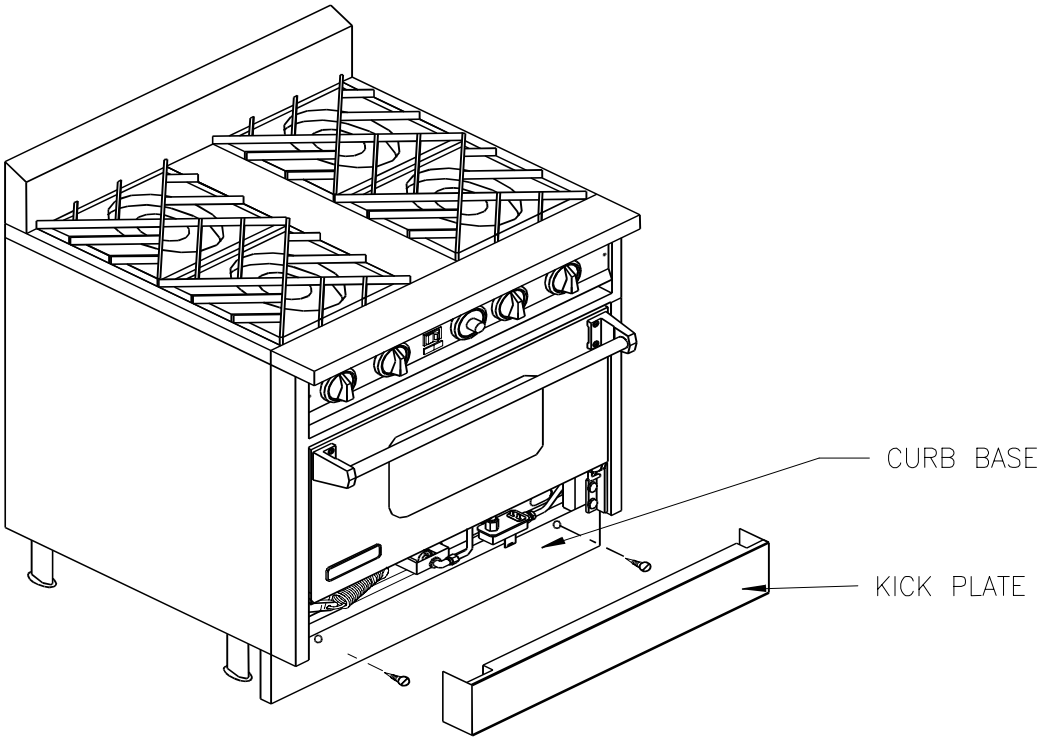

# ISLAND BACK/STUB BACK/HIGH SHELF INSTALLATION:

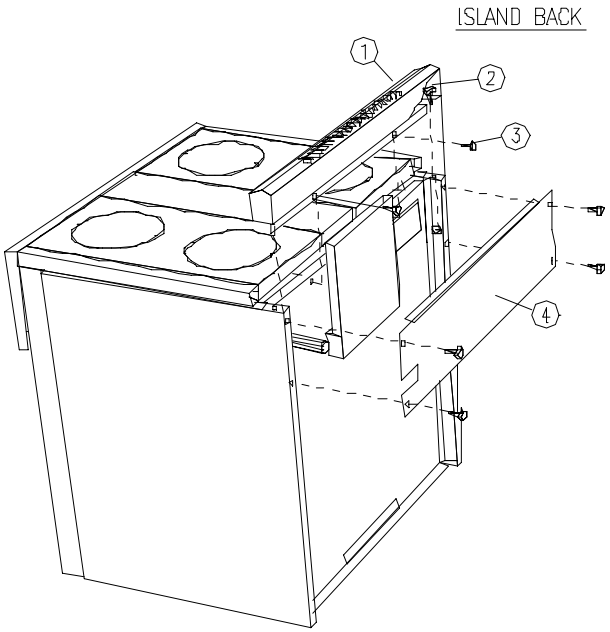


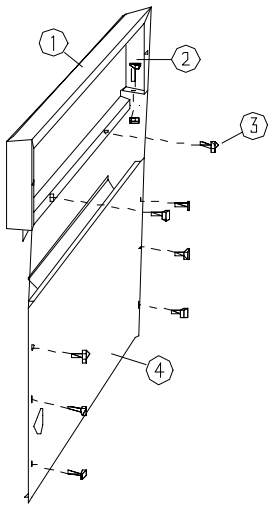


STUB BACK

**TO INSTALL ISLAND BACK:**

1 INSTALL FRONT.
2 SECURE THE SIDE FLANGES OF THE FRONT USING BOLT, AND NUT ON EACH END.
3 SECURE THE BOTTOM LIP OF THE FRONT AGAINST THE BACK OF THE RANGE USING 2 SCREWS (4 SCREWS ON DOUBLE OVENS).
4 INSTALL BACK BOTTOM WITH THE SLOT MATCHING THE GAS SUPPLY PIPE AS SHOWN. SECURE BOTTOM USING 4 SCREWS.

**TO INSTALL STUB BACK:**

USE SAME PROCEDURE AS ISLAND BACK.

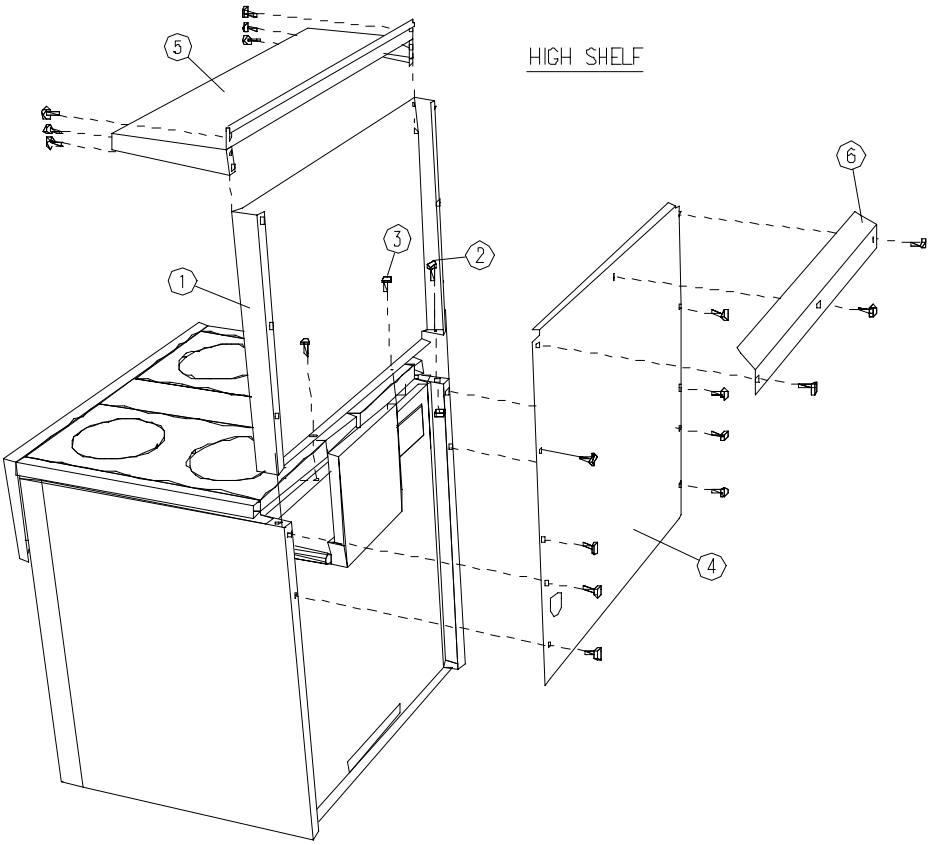


**TO INSTALL HIGH SHELF:**

1 INSTALL HIGH SHELF FRONT.
2 SECURE THE SIDE FLANGES OF THE FRONT USING BOLT, AND NUT ON EACH END.
3 SECURE THE BOTTOM LIP OF THE FRONT AGAINST THE BACK OF THE RANGE USING 2 SCREWS (4 SCREWS ON DOUBLE OVENS).
4 INSTALL BACK WITH THE HOLE MATCHING THE GAS SUPPLY PIPE AS SHOWN. SECURE BACK USING 8 SCREWS.
5 HOOK HIGH SHELF TO TOP OF FRONT, AND SECURE SHELF WITH 6 SCREWS.
6 INSTALL DEFLECTOR AND SECURE IT WITH 3 SCREWS.

# CLEARANCE AGAINST COMBUSTIBLE SURFACES:

The Jade Gas Range must be installed in accordance with the minimum clearances as illustrated below. Avoid placing cabinets directly above the range in order to reduce the hazards in reaching over the range. When installed, the maximum depth of the overhead cabinets is 13 inches.

A required distance of 40" minimum vertical clearance between the cooking surface and combustible construction above the appliance should be maintained. We recommend 30" distance from the bottom of a standard ventilating hood made of sheet metal or noncombustible material to the range top surface. Because of the high heat output of the Jade RJGR Gas Ranges, a suitable exhaust hood **must** be installed above the range. Because the design and efficiencies of the ventilating hoods vary from one manufacturer to another, consult your hood supplier or manufacturer for their recommended hood size, the hood distance from the range top, and required CFM's. The hood width must be at least the same width as the range. The hood depth must be 19" minimum.

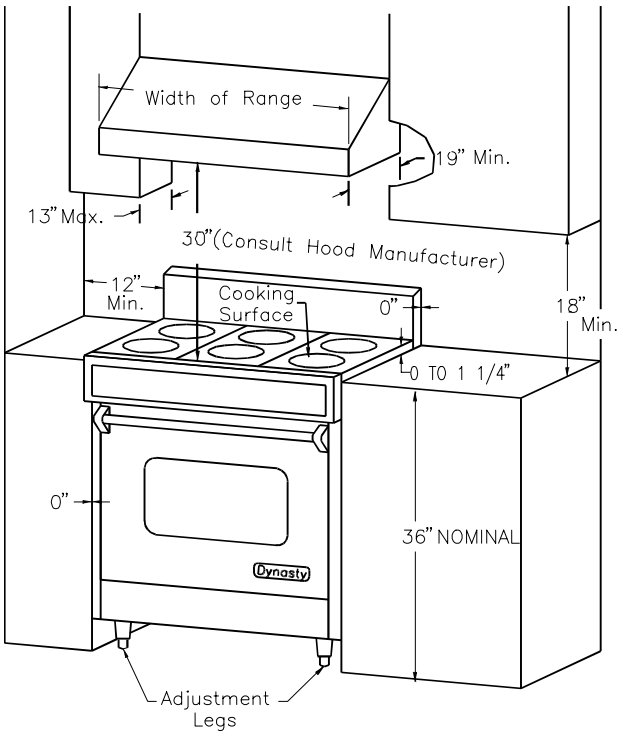


IMPORTANT:
ANY OPENING IN THE WALL BEHIND THE APPLIANCE MUST BE SEALED.

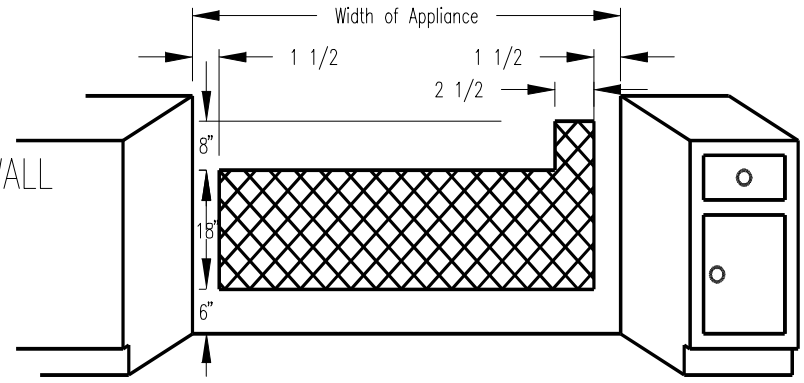


SHADED AREA IS THE RECOMMENDED AREA FOR LOCATING ELECTRICAL OUTLET AND GAS SUPPLY TO THE RANGE.

# GAS CONNECTION:

**IMPORTANT**

Shut off gas supply before removing an existing range and leave it off until new installation is completed.

Use only pipe joint compound that is approved for use with petroleum gases. Install a manual shut-off valve in an accessible location in the gas piping, external to the range for the purpose of turning on or shutting off gas to the range. To facilitate in moving or servicing the range, a flexible connector complying with ANSIZ21.69 is recommended.

- **The appliance must be isolated from the gas supply piping system by closing its individual manual shut off valve during any pressure testing of the gas supply piping system at test pressures equal to or less than 1/2 psig (3.5 kPa). Check incoming gas supply pressure and the manifold pressure (after the regulator) using a manometer. The required manifold pressure for natural gas is 5" water column and for LP is 10" W.C. The gas supply line must be at least 1" W.C. above the manifold pressure and must not exceed 14" W.C. (3.5 kPa or 1/2 psig)**

Installation of this range must conform with local codes. Call the local gas supplier for the applicable codes in the area. If there are no codes, the installation must conform with the NATIONAL FUEL GAS CODE ANSI Z223.1 - Latest Edition. A copy of this code may be obtained by contacting:

**CSA America**
**8501 E. Pleasant Valley Rd.**
**Cleveland, Ohio 44131**
**(216) 524-4990**
**www.csa-america.org**

The maximum allowable incoming gas pressure for the regulator installed in the range is 1/2 psig (pounds per square inch gauge), equivalent to 14 inches water column. For LP-installation, a step down regulator must be used to bring down the gas pressure from the LP bottle to below 14 inches. The minimum incoming gas pressure to the regulator must be 1 inch above the range designed manifold pressure. Refer to chart on gas conversion for the gas pressures.

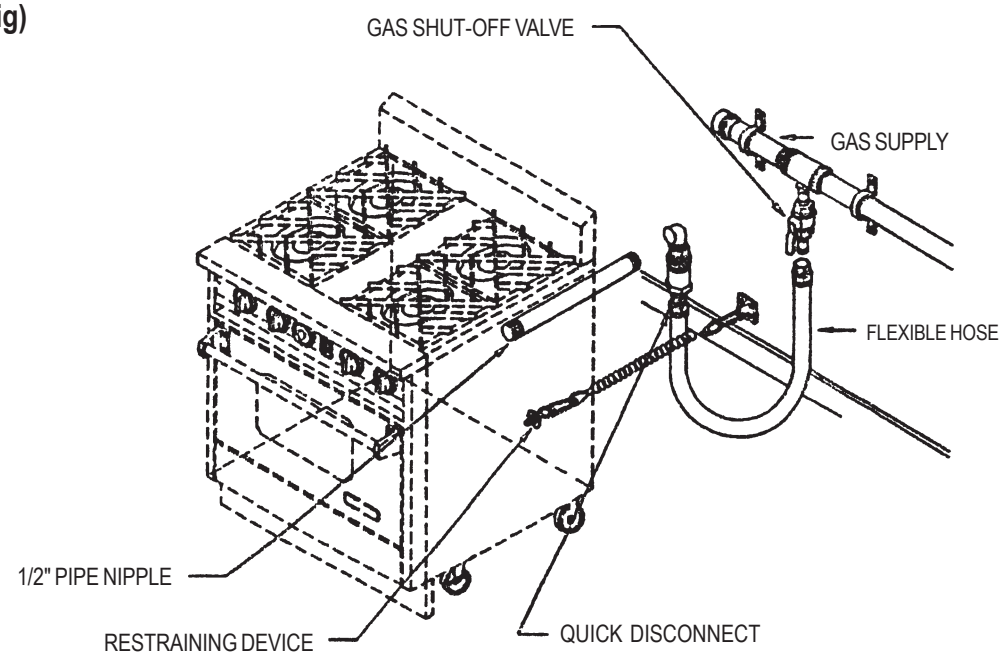


**Check for gas leaks using soap-water solution. Do not use open flame to check for leaks.**

# GAS CONVERSION FOR RJGR SERIES

All Jade cooking appliances are designed and engineered to operate efficiently and safely with either natural or propane gas. However, each gas requires its own specific regulator and gas orifice setting. The name plate on your unit identifies its original gas setting. This conversion must be done by an approved service agent.

WARNING: TURN OFF GAS AND ELECTRICAL SUPPLY BEFORE ANY PROCEDURE BELOW IS PERFORMED.

A) REGULATOR CONVERSION PROCEDURE (See Figure A)

The regulator can be converted by turning the regulator cap over. The marking on the cap for the type of gas setting will be exposed.

B) ORIFICE CONVERSION PROCEDURE (See Figure B)

1) Remove the orifice hood from the valve or bi-metal valve. Extreme care should be taken to avoid damage to threads on the orifice and/or valve.

2) Make sure that all internal surfaces of the new orifice and valve are clean.

3) Make sure that dirt, dust, and other contaminants are not allowed to get inside the valve or orifice hood during assembly.

4) Install new orifice hood by carefully screwing it onto the valve or bi-metal valve. Follow proper orifice sizes indicated on chart below.

5) Adjust air shutters for optimum burner performance.

WARNING: IN ORDER TO AVOID A FIRE OR AN EXPLOSION CAUSING PROPERTY DAMAGE, PERSONAL INJURY, OR DEATH, EXTRA-PRECAUTION SHOULD BE TAKEN WHEN CONVERTING FROM NATURAL GAS TO LP-PROPANE BY FOLLOWING CORRECT ORIFICE SIZES AS SPECIFIED ON CHART BELOW.

WARNING: ALL ORIFICES WITH NO EXCEPTION MUST BE CONVERTED.

Before turning the gas supply on, check for leaks and make sure that all control knobs are turned OFF.

MAXIMUM incoming pressure to the regulator : 14" WATER COLUMN
MINIMUM incoming pressure to the regulator : 6" W.C. — NATURAL GAS
11" W.C. — LP-PROPANE
MANIFOLD PRESSURE (outgoing pressure from regulator) : 5" W.C. — NATURAL GAS
10" W.C. — LP-PROPANE

| | | ORIFICE SIZES* | |
|---|---|---|---|
| | BTU/HR | NATURAL GAS | LP-PROPANE |
| SIMMER BURNER | 10,000 | #54 DMS | #63 DMS |
| OPEN BURNERS | 15,000 | #50 DMS | #57 DMS |
| INFRARED BROILER | 15,000 | #51 DMS | #57 DMS |
| WOK | 20,000 | #45 DMS | #56 DMS |
| GRIDDLE | 15,000 | #51 DMS | #57 DMS |
| CHAR BROILER (2) | 12,000 | #52 DMS | #58 DMS |
| 14" OVEN | 20,000 | #45 DMS | #55 DMS |
| 25" OVEN | 27,500 | #41 DMS | #53 DMS |
| 31" OVEN (2) | 20,000 | #45 DMS | #55 DMS |

*For elevations at or above 2,000 feet consult with factory.

# GAS CONVERSION FOR RJGR SERIES

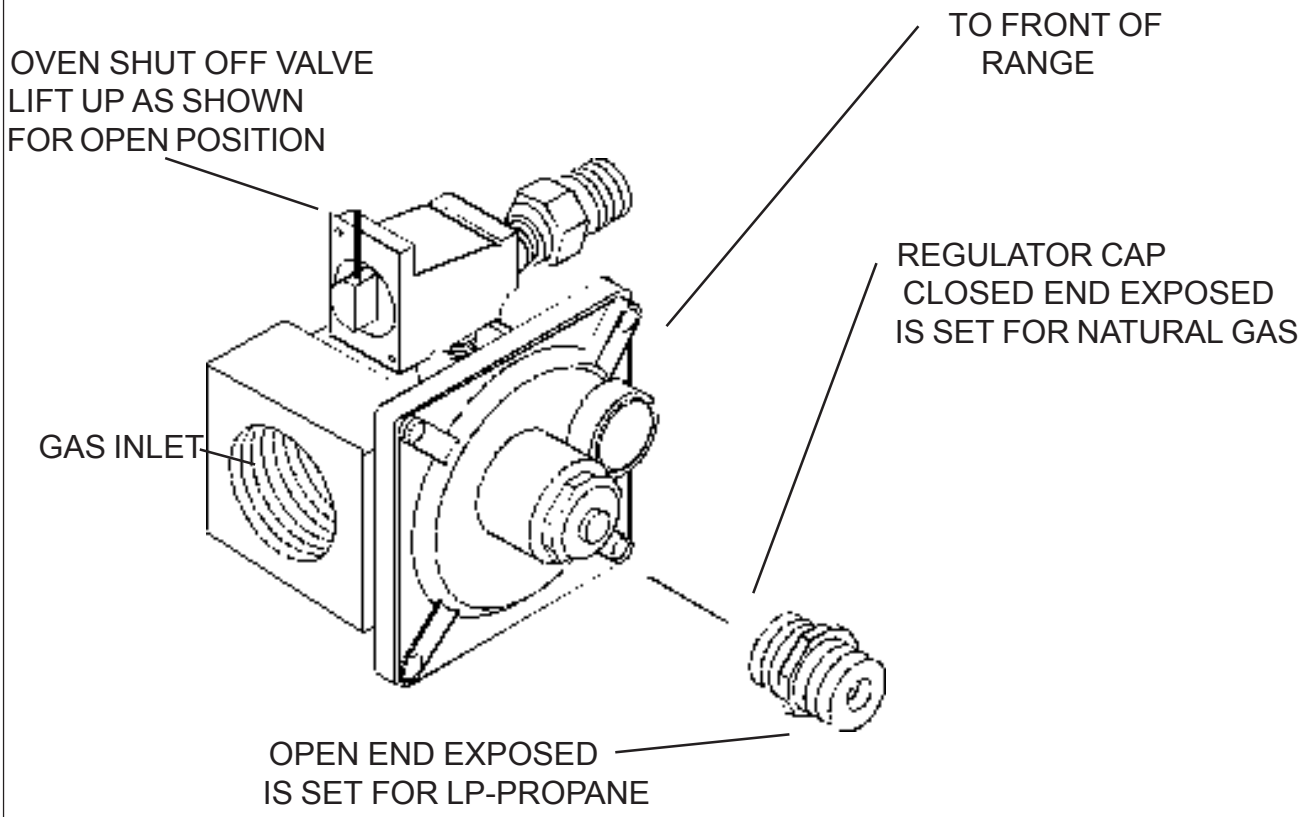


FIGURE A

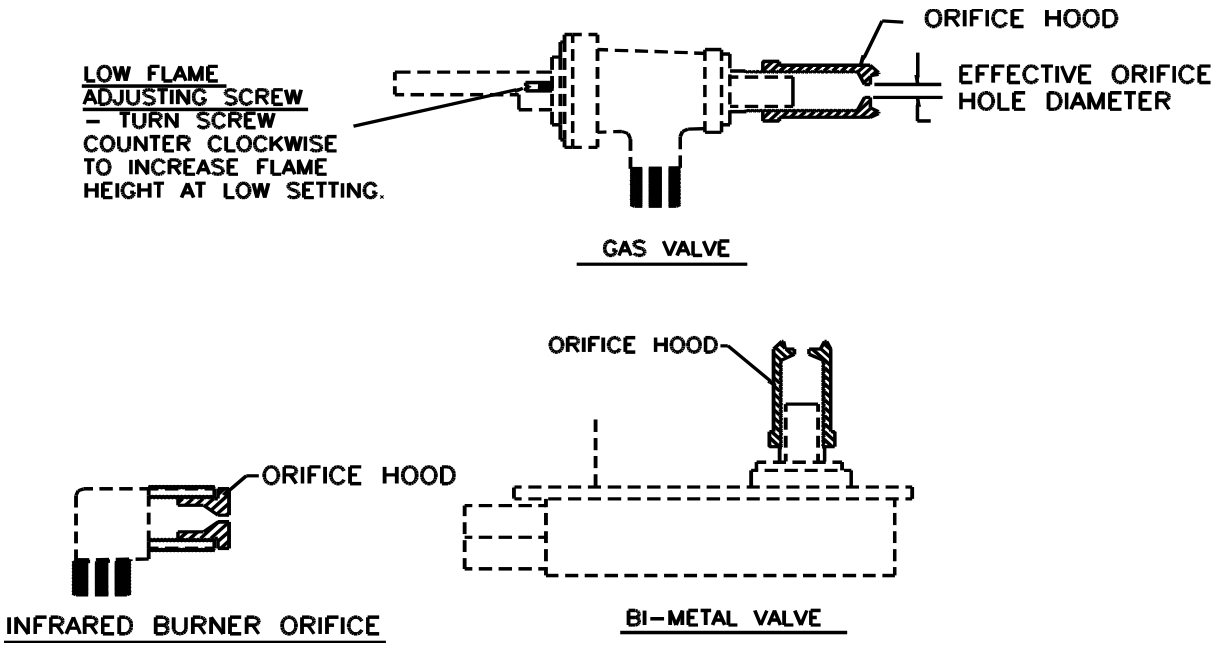


FIGURE B

# ELECTRICAL CONNECTION

This appliance is equipped with a three prong (grounding) plug for your protection against shock hazard and should be plugged directly into a properly grounded three prong receptacle. Do not cut or remove the grounding prong from this plug. This appliance must be electrically grounded in accordance with local codes or, in the absence of local codes with the National Electrical Code ANSI/NFA 70-latest edition. In Canada, it must be in accordance with CSAC22.1 Canadian Electrical Code Part 1. A copy of the National Electrical Code can be obtained by writing to :

**National Fire Protection Association**
**Batterymarch Park**
**Quincy, MA 02269**

RJGR models require a 120 volt, 60 hertz, 15 AMP, AC properly grounded household circuit. The circuit must be protected with a circuit breaker or time delay fuse.

Improper grounding can affect the spark ignition system. If a grounded three hole outlet is not available, have an electrician change the old outlet or install a new one. To temporarily use a polarized and grounded two hole outlet until a grounded three hole outlet can be installed, a grounded three hole adapter plug can be used. Have an electrician test the outlet for proper grounding.

Before plugging in the range, make sure all the controls, burner knobs and power switch, are in the OFF position. To turn power switch to OFF, depress the rocker switch, opposite to the power indicator light.

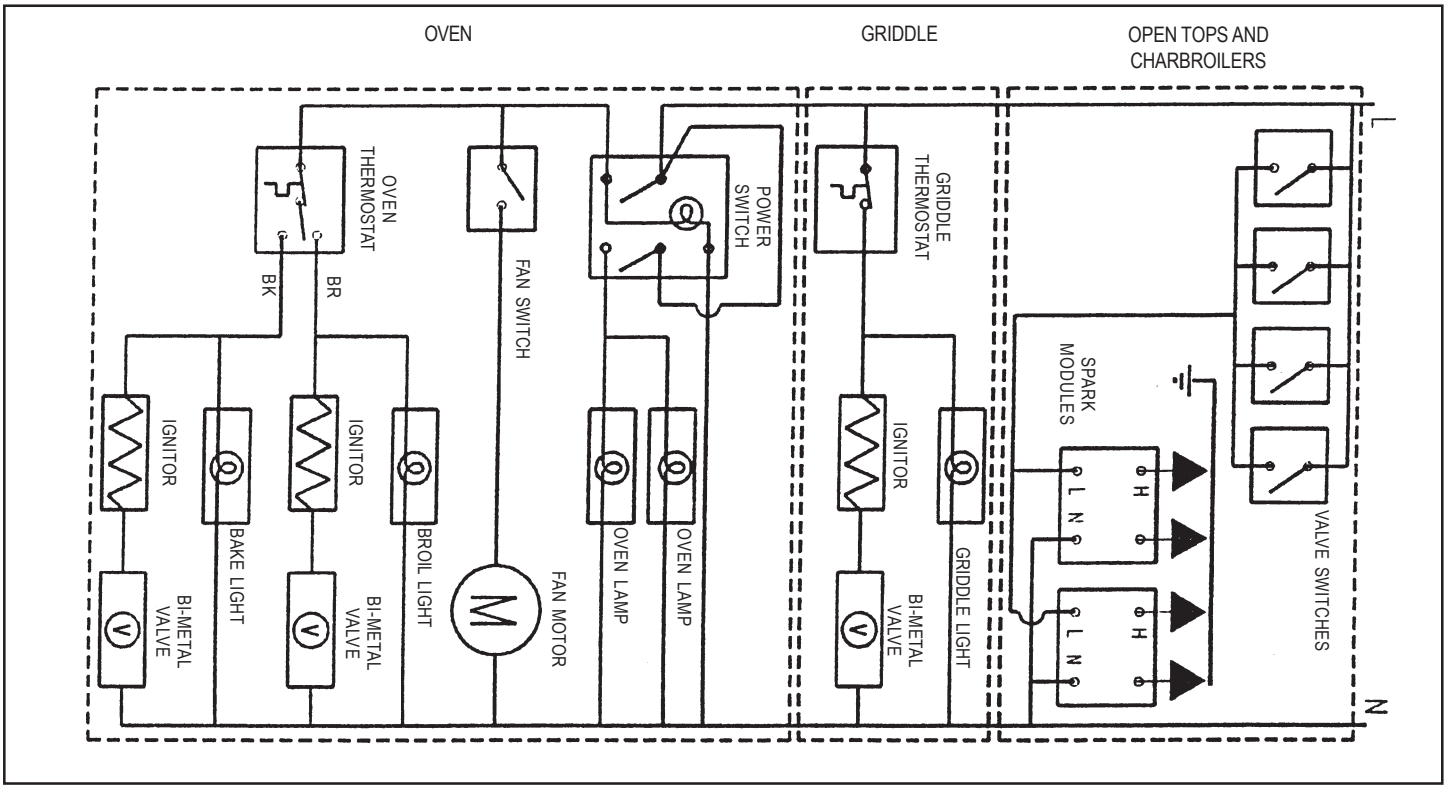

# INITIAL STARTUP AND ADJUSTMENT

The air for combustion is supplied through the front of the range. The combustion air is exhausted upward and through the flue way. Do not obstruct the flow of combustion and ventilation air.

IMPORTANT

For proper operation of the range, it is very important that the unit is leveled. To level the range:

1. Use 1" open end adjustable wrench. Turn the adjustable feet equally until the top of the range is even or higher than the counter top.
2. Install the oven racks.
3. Put a carpenter's spirit level or a measuring cup partially filled with water on one of the oven racks.
4. Adjust the leg's feet using the wrench.

Before startup, make sure that the range has been carefully checked for gas leaks and that the range has been properly connected to electric power.

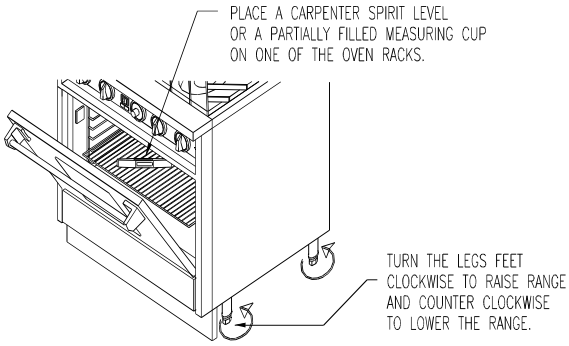


Every RJGR Range is fully tested and adjusted in the factory. Due to the difference in gas heating values, elevations, and ventilating conditions of every installation, minor adjustment of the burners may be necessary. Carefully follow the procedures described below.

# OPEN TOP / SIMMER

Open top burners are in sets of two. The right burner knob controls the front burner and the left knob controls the rear. These top burners are rated at 15,000 BTUs per hour. They can be turned down to 1,000 BTUs for delicate cooking. For simmering, a dedicated simmer burner is located at the right rear. This smaller burner has a maximum rate of 10,000 BTU/HR and can be turned down to 500 BTU/hr.

**To ignite the burners**, push the corresponding knob in, turn knob to HI and then to LITE position. You will hear a clicking sound indicating the proper operation of the spark igniters. After the air in the supply line has been purged, the burner should ignite within a few seconds. After ignition, turn knob to desired setting. The clicking sound should stop. Please remember... these burners produce a lot of heat (15,000 BTU/hr.) at HI setting. Do not operate the burners for an extended period of time without cookware on the grates. The porcelain on the GEOGRATES may chip without the cookware to absorb the heat. Also because of the high input rate, a slight popping sound is normal during ignition of the burners.

The burners are tested and adjusted at the factory. The burner flames when set on HI must have clean, sharp blue flames with distinct inner cones of about 1 inch high.

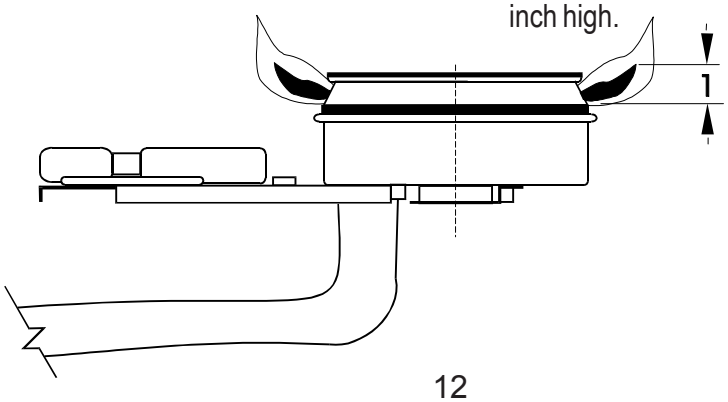

If the flames are yellow, soft, lazy with indistinct cones, it signifies insufficient air. For natural gas it is normal that the burners have blue flames with little orange tips. For propane, it is normal to have blue flames with yellow tipping. If the flames are noisy and tend to lift away from the burner, then it means excessive air. To adjust the air, loosen the Phillips screw on top of the air shutter and turn air shutter to correct setting. Tighten the screw after adjustment. It is normal that the smaller burner has sharper flames than the large burners.

Turn the burner knob to LOW (simmer) setting. At this setting, the burner ports must be fully lit with the smallest possible flames without flickering. If some ports do not stay lit or if the flames are high, adjustment is necessary. To adjust, set knob to low and pull out the control knob. With a skinny flat screw driver (1/8" wide) locate the adjusting screw at the center of the valve stem. Turn the screw clockwise to lower the flame and counter clockwise to increase.

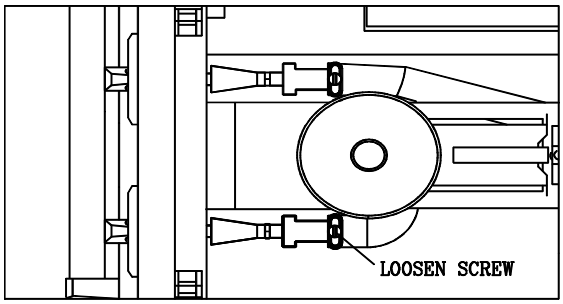


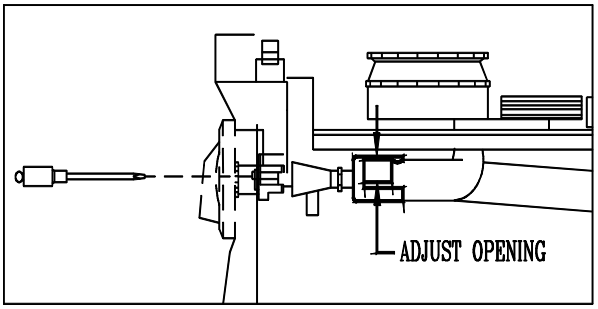


## INFRARED BROILER

The infrared broiler uses a glowbar ignition system. To light the broiler, turn power switch on, push and turn oven thermostat to broil. The red indicator "BROIL" light will come on. The glowbar igniter will glow and after a few seconds the infrared burner will ignite.

The ceramic burner surface will glow into an orange red color to emit infrared heat. There is no adjustment to the infrared burner.

NOTE: The noise of gas flowing into the infrared burner is normal.

## OVEN

The oven burner and igniter are accessible by removing the oven bottom pan. The oven uses a glowbar ignition system. To light oven turn power switch on. Push and turn oven thermostat to desired setting. The orange indicator "BAKE" light will come on. The glowbar igniter will glow and after a few seconds the oven burner will ignite. The burner flames should be blue with distinct cones 1 to 1 1/4 inches high. If the flames are yellow, soft, lazy with indistinct cones, it signifies insufficient air. For natural gas, it is normal that the burners have blue flames with little orange tips. For propane, it is normal to have flames with yellow tipping. If the flames are noisy and tend to lift away from the burner then it means excessive air. To adjust burner flames, loosen the air shutter screw and turn air shutter. Retighten the air shutter.

NOTE: The noise of gas flowing into the burner is normal.

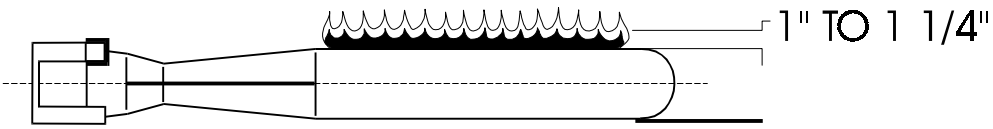

## WOK BURNERS

Ignition and adjustment procedures for the wok burners are the same as the open top burners.

## CHARBROILER

Similar to the open top burners, the charbroiler uses spark ignition. To light burner, push knob in, turn knob to HI and then turn to LITE. To adjust burner flames, turn air shutters. The burner flames should be blue with 1/2" high distinct cones. It is normal that during initial startup and when the knob is set on HI, the first inch of the ports are not lit.
After the burners have established and warmed-up, the front ports will stay lit.

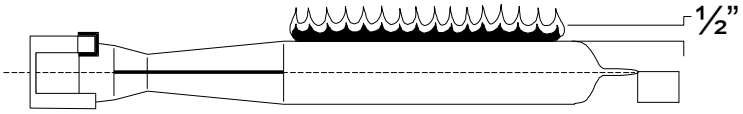


## GRIDDLE

The griddle uses a glowbar ignition system. To light the griddle burner, turn power switch on. Push and turn griddle thermostat to desired setting. The glowbar igniter will glow and in 20 seconds the griddle burner will ignite. The burner flames should be blue with distinct cones 1/2" to 3/4" high. To adjust burner flames, loosen air shutter screw and turn air shutter.

# INSTALLATION OF ANTI-TIP BRACKET

**⚠ WARNING**

**This range can tip. Injury to persons could result. Install the anti-tip bracket provided in accordance with installation instructions.**

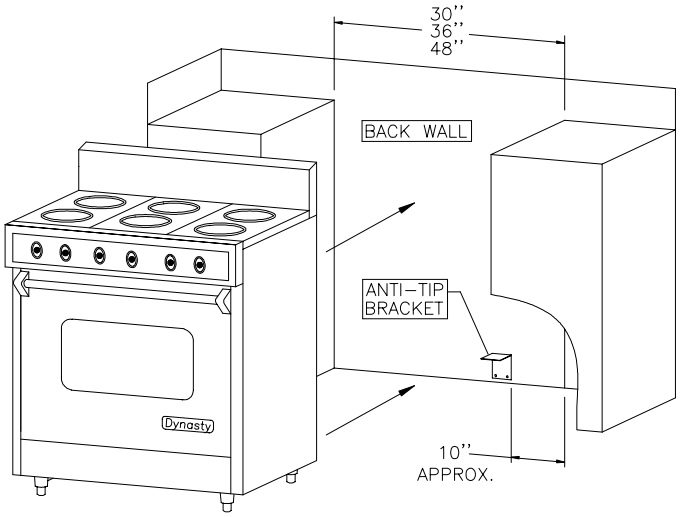


- The installation of anti–tip brackets can be done in either of two ways:
  1.) Wall mounting 2.) Floor mounting
- Select one way that will be appropriate for the installation.
- Adjust legs so that bottom of range is 4" from the floor.
- Mount anti–tip brackets as follows:

For Wall Mounting (Fig. A)

- Locate bracket 1/2" from floor and 10" from either end of the oven.
- Secure bracket to wall using the two (2) #12 pan head wood screws provided. Make sure the screws are secured to the 2" x 4" floor wood sole plate, or wall wood studs.
- Slide range into place. Ensure that distance from the back wall is such that when range is installed the top flange of the anti–tip bracket will overlap the flange on the range bottom by a minimum of 3/4".

Note: The other holes on wall mounted bracket are provided as alternate locations for mounting the 2 screws. If installation of wall bracket is done using the vertical holes on the bracket, ensure that there is a 2"x4" stud on the wall behind the bracket.

FOR WALL MOUNTING
(FIG. A)

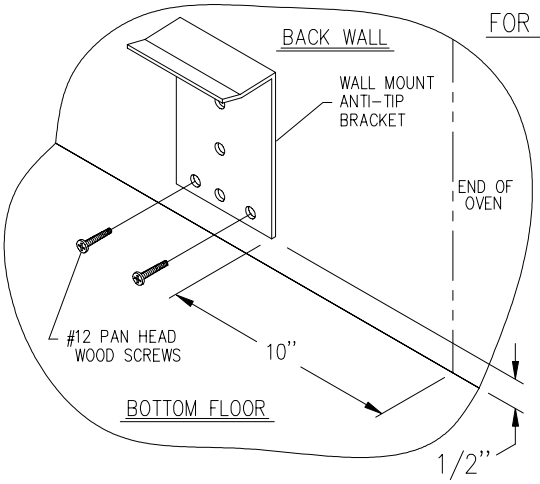


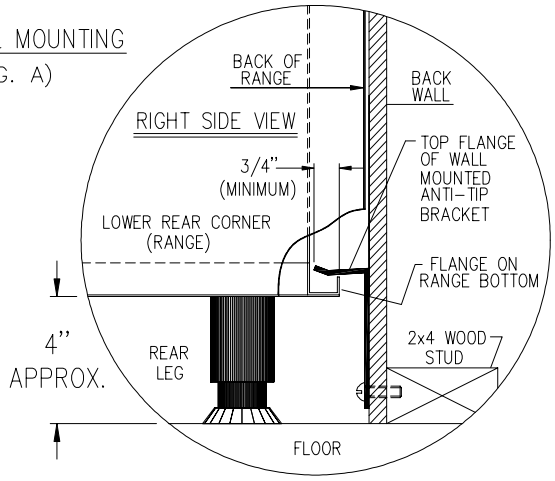

## For Floor Mounting (Fig. B)

- The floor mounting bracket can be located on the floor against the back wall (Fig B, Right Side View) or on the floor in front of the back wall (Fig C).
- Locate bracket 10" from either end of the oven.
- Determent appropriate location of floor mounting bracket. Ensure that after installation when range is slid into place, the anti-tip bracket will overlap the flange on the range bottom by a minimum of 3/4".
- Secure bracket to wood floor using the two (2) wood screws or the two (2) anchors for concrete, masonry floor.
- Slide range into place.

FOR FLOOR MOUNTING

(Fig. B)

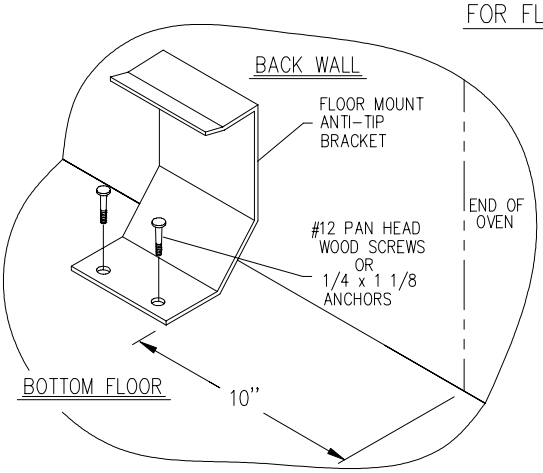


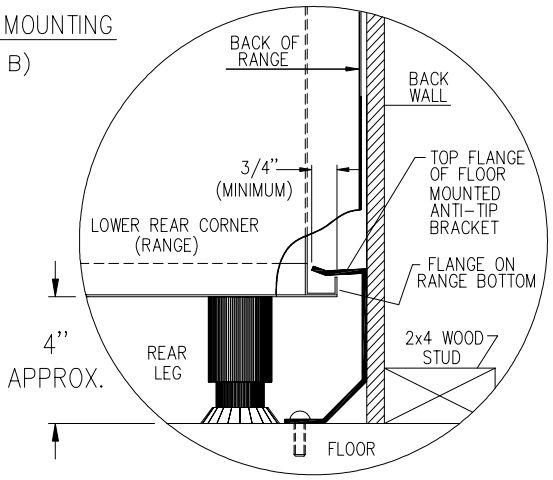


RIGHT SIDE VIEW
FLOOR MOUNTING BRACKET
AGAINST BACK WALL

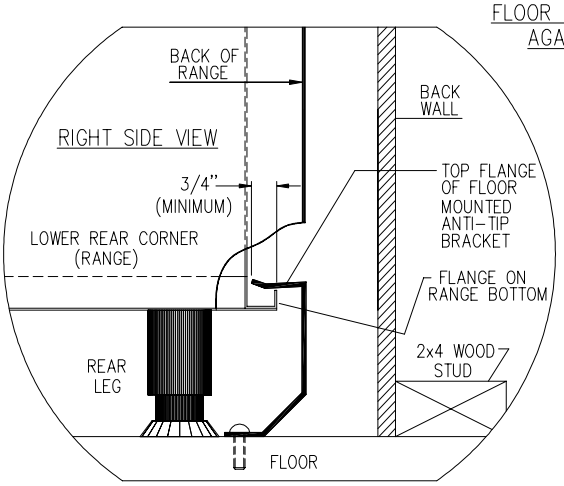


FLOOR MOUNTING BRACKET IN
FRONT OF BACK WALL

(Fig. C)

**<u>Important note:</u> Make sure that the top flange of anti-tip bracket overlaps the flange range bottom by a minimum of 3/4" for both wall & floor mounted brackets**