This Owner's Manual is provided and hosted by Appliance Factory Parts.

Appliance Factory Parts
Experts in BBQ, Humidifier, & Appliance Parts
1-800-955-7075

GE DPGT750GC0WW Owner's Manual

Shop genuine replacement parts for GE DPGT750GC0WW

Find Your GE Dryer Parts - Select From 3387 Models

-------- Manual continues below --------

DPGT750GC

GE Profile™ Harmony™ King-size 7.3 Cu. Ft. Capacity Gas Dryer

Dimensions and Installation Information (in inches)

Exhaust Options: When viewed from the front of the unit, exhaust 3-way via rear, left and bottom. Dryer is shipped exhausted to the rear. Alternate exhausting knockouts are supplied. Left or bottom exhaust requires a conversion kit.

Gas: An individual properly-grounded branch circuit, with a three-prong grounding-type receptacle, protected by a 15 or 20 amp circuit breaker or a time-delay fuse is required.

Gas Dryer Electric Rating: 120V, 60Hz, 6A

Gas (BTU/HR): 25,000. Factory-equipped for natural gas. Tested for LP gas. LP gas supply requires a conversion kit. Check installation instructions for correct kit and have a qualified gas technician install a conversion kit. See dryer ducting information for proper installation.

Note: Dryer wall outlet must be located within 36" of service cord entry and accessible when dryer is mounted in position.

Installation Information: For complete information, see installation instructions packed with your dryer.

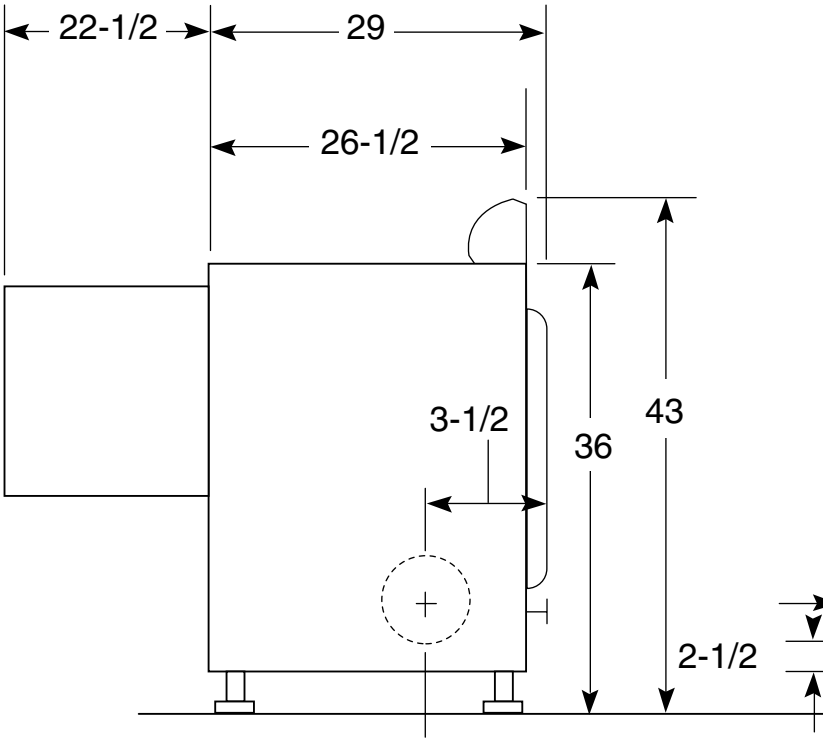

Side View

For answers to your Monogram,® GE Profile™ or GE® appliance questions, visit our website at ge.com or call GE Answer Center® service, 800.626.2000.

imagination at work

S

DPGT750GC

GE Profile™ Harmony™ King-size 7.3 Cu. Ft. Capacity Gas Dryer

For complete information, see installation instructions packed with your dryer.

Ducting Materials:
For best performance, this dryer should be vented with 4" diameter all rigid metal exhaust duct. If rigid metal duct cannot be used, then UL-listed flexible metal (semi-rigid) ducting can be used (Kit WX08X10077). In special installations, it may be necessary to connect the dryer to the house vent using a flexible metal (foil-type) duct. A UL-listed flexible metal (foil-type) duct may be used ONLY in installations where rigid metal or flexible metal (semi-rigid) ducting cannot be used AND where a 4" diameter can be maintained throughout the entire length of the transition duct. Please see installation instruction packed with your dryer for complete instructions when using flexible metal (foil type) ducting.

Exhaust Length Calculation:

1. Determine the number of 90° turns needed for your installation. If you exhaust to the side or bottom of dryer, add one turn.
2. The maximum length of 4" rigid (aluminum or galvanized) duct which can be tolerated is shown in the table. A turn of 45° or less may be ignored. Two 45° turns within the duct length should be treated as a 90° elbow. A turn over 45° should be treated as a 90° elbow.

Dryers **must** be exhausted to the outside.

Caution: For personal safety do not terminate exhaust into a chimney, under any enclosed house floor (crawl space), or into an attic, since the accumulated lint could create a fire hazard or moisture could cause damage. Never terminate the exhaust into a common duct or plenum with a kitchen exhaust, since the combination of lint and grease could create a fire hazard.

Exhaust ducts should be terminated in a dampered wall cap to prevent back drafts, bird nesting, etc. The wall cap must also be located at least 12" above the ground or any other obstruction with the opening pointed down.

Dryer Elbow Kit, Pub. No. 14-A003 is available at additional cost. For use with side or bottom exhaust options.

For more information on venting kits and accessories, please call 1-800-GE-CARES.

imagination at work

Special Installation Requirements

Alcove or Closet Installation:
- If your dryer is approved for installation in an alc
  on the dryer back.
- The dryer MUST be exhausted to the outside.
- Minimum clearances between dryer cabinet a
  0" either side; 3" front and rear
- Minimum vertical space from floor to overhea
- Closet doors must be louvered or otherwise ve
  of 60 sq. in. of open area equally distributed. If
  a dryer, doors must contain a minimum of 120
- No other fuel-burning appliance shall be instal

Bathroom or Bedroom Installation:
- The dryer MUST be exhausted to the outdoors.
- The installation must conform with the local co
  with the National Electric Code and National F

Minimum Clearances other than Alcove or Clo
- Minimum clearances to combustible surfaces

Dryer Exhausting Information: Use metal duct

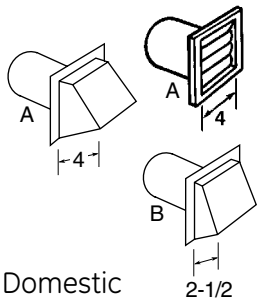

Domestic dryer models	Number of 90° turns	**Best** Maxim dia. **ri** Exhau **A** 4 oper
7.5 and 7.3 cu. ft. capacity electric and gas dryers	0	150
	1	140
	2	130
	3	120
	4	110

S

DPGT750GC

GE Profile™ Harmony™ King-size 7.3 Cu. Ft. Capacity Gas Dryer

Features and Benefits

- Receives Load Information Electronically from the Washer (WPGT9350)
- King-size 7.3 Cu. Ft. Capacity Dryer with Stainless Steel Drum and Deluxe Dryer Rack
- DuoDry™ System Quickly and Consistently Dries All Types of Clothes
- LCD Electronic Controls with Time Display Status Lights and Cycle Countdown with LCD Indicators
- Variable Heater Delivers Constant Heat, with No On-off Cycling, for Optimal Drying Results
- Adaptive Venting System Delivers Exceptional Drying Performance
- Delicate Cycle with Extra Low Setting Maintains an Average Fabric Temperature of 125°F to Protect Fine Handwashables
- Reversible Washer and Dryer Control Panels Can be Easily Interchanged Without Any Loss of Function, Allowing Installation Flexibility
- Multiple Dry Cycles with 6 Custom Cycles and Adaptive Logic System™
- Dual Electronic Thermistors
- Dual Motors
- Dryer Interior Light
- Model DPGT750GCPL –Dark platinum
- Model DPGT750GCWW –White on white

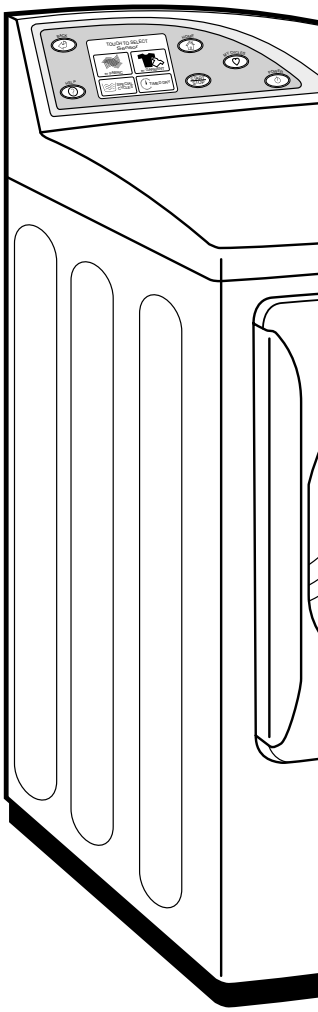

imagination at work

Sp