This Owner's Manual is provided and hosted by Appliance Factory Parts.

Appliance Factory Parts
Experts in BBQ, Humidifier, & Appliance Parts
1-800-955-7075

MAJESTIC KHLDV600 MARQUIS CLEAR VIEW Owner's Manual

Shop genuine replacement parts for MAJESTIC KHLDV600 MARQUIS CLEAR VIEW

Find Your MAJESTIC Fireplace Parts - Select From 585 Models

-------- Manual continues below --------

PRODUCT SPECIFICATIONS

KHLDV400 Marquis Direct Vent System

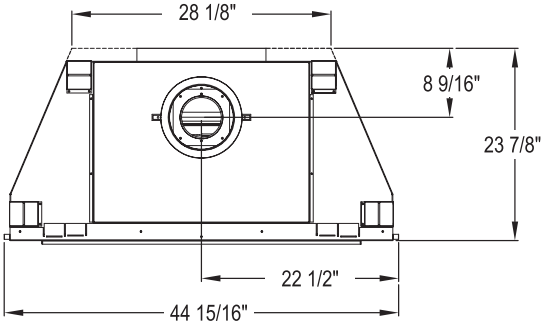

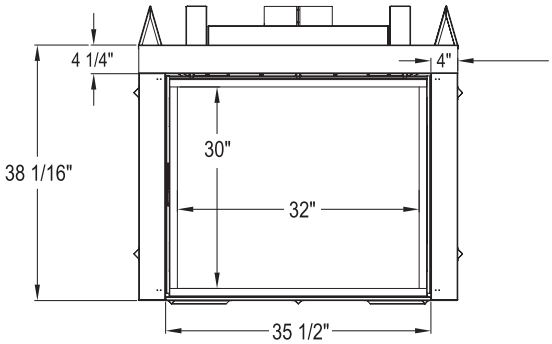

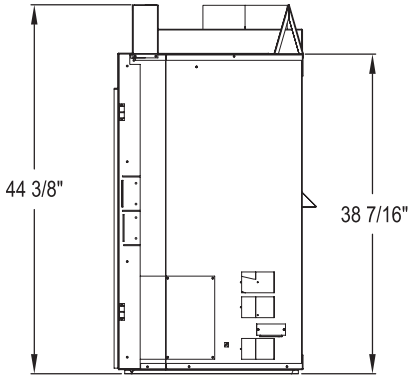

GLASS VIEWING AREA

32"W x 30"H (960 Square Inches)

TECHNICAL INFORMATION

Max. Btu Input: 40,000 BTU/HR
Ignition System: Standing Pilot or Signature Command™ System
Gas Type: Natural or LP
Flue Type: Simpson Dura-Vent, Selkirk Metalbestos, MetalFab
Termination: Top vent
Clearance to Flue for interior: 3" Top, 1" Bottom and Sides
Clearance to Flue for Outside Wall: 1"
Clearance to Fireplace: 1"
Minimum Vent Height Before Elbow: 24"

FIELD INSTALLED ACCESSORIES

Standing Pilot Variable Thermostat Controlled Dual Forced Air Blower (160 cfm): BLOTKHLTD
Signature Command Dual Forced with Blower: BLOTKHLSC
Firebrick (required): Tavern Brown, Cottage Red, Olde English
Ambient Technologies™ Remote Controls and Thermostats
Andirons
Glass Doors (Decorative)
Field Conversion Kits

FRAMING DIMENSIONS

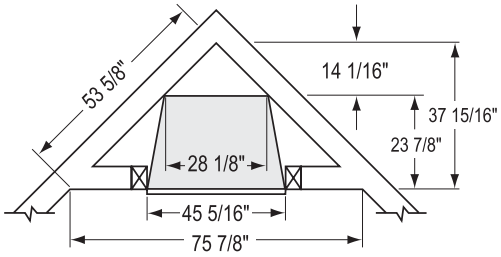

MADE IN U.S.A.

A Brand of Monessen Hearth Systems Co.
149 Cleveland Drive, Paris, Kentucky 40361
www.majesticproducts.com

To avoid personal injury or property damage, the product described by this brochure must be installed, operated and maintained in strict compliance with the instructions packaged with the product and all applicable building or fire codes. Contact local building or fire officials about restrictions and installation inspection requirements. All photographs and drawings on this brochure are for illustrative purposes