This Owner's Manual is provided and hosted by Appliance Factory Parts.

Appliance Factory Parts
Experts in BBQ, Humidifier, & Appliance Parts
1-800-955-7075

MAJESTIC KSTDV500 MARQUIS SEE THRU Owner's Manual

Shop genuine replacement parts for MAJESTIC KSTDV500 MARQUIS SEE THRU

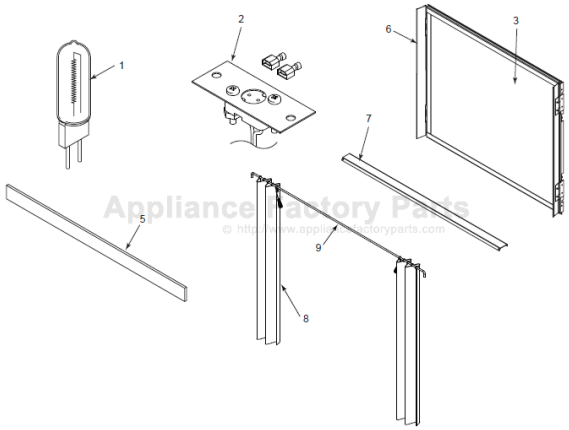

Find Your MAJESTIC Fireplace Parts - Select From 585 Models

-------- Manual continues below --------

Premium Direct Vent Fireplace Systems

MAJESTIC

MARQUIS CLEAR VIEW

The KHLDV 400/500 from Majestic is changing the face of fireplace design. Its louverless clean face combined with an expansive viewing area ensures that the incredibly life-like flames are the true focal point in any room. Designed to suit any décor and offered in three standard sizes, the Marquis Clear-View from Majestic is right at home regardless of taste or style.

The perfect fire from any angle: no glare, non-reflective ceramic glass provides the clearest view available.

KHLDV500 shown on cover with Tavern Brown firebrick

Marquis KHLDV400 with Cottage Red firebrick and optional filigree doors

Give people a place to gather – make fire the focal point of your room again with these premium direct vent fireplaces from Majestic.

Fire, and more, at your fingertips!
TOTAL SIGNATURE COMMAND™ SYSTEM.

No other system offers as many available features as the Total Signature Command™ (TSC) System, now available on our premium direct vent fireplaces. From your Touch Screen remote control you can light the pilot and control three step flame adjustment, or just let the Smart Mode Thermostat take command and automatically modulate your fireplace at its most comfortable and efficient operation. Enjoy A/C functionality with automatic battery backup, adjust the blower speed, accent light, and control rear burner shut off without getting up from your couch. The TSC system also includes cold climate pilot options and a touch button command center. (The full command Touch Screen remote control is included with the purchase of KHLDVTSC and WDVTSC model fireplace systems.)

TOTAL SIGNATURE COMMAND™ (TSC) CONTROL FEATURES:

- A/C control with battery back-up
- Electronic ignition
- Cold climate pilot optional setting
- Hi/Lo 3 step flame adjustment
- Accent light with three step dimming
- Rear burner shut-off
- Touch button command center
- Full function TSFRSC touch screen hand held remote control included
- Comes standard with SCSACM A/C module

SIGNATURE COMMAND™ SYSTEM

Marquis KHLDV500 with
Olde English firebrick

Marquis KHLDV600 with Olde English firebrick and accent light off

Shown with rear burner turned down

Shown with accent light illuminated and rear burner turned down

STANDARD FEATURES:

- Total Signature Command™ Control (TSC) with full function TSFSC hand held remote control included
- Available in three sizes: 32" opening (KHLDV400), 36" opening (KHLDV500) and 42" opening (KHLDV600)
- Clear-View ceramic glass: viewing area of 960 square inches (KHLDV400), 1080 square inches (KHLDV500) and 1500 square inches (KHLDV600)
- Max BTU output: 40,000 (KHLDV400), 50,000 (KHLDV500) and 60,000 (KHLDV600)
- Ember bed burner with fiber ceramic logs
- Accent light provided standard with manual dimmer control
- Top vent with 5"x 8" direct vent pipe
- Fits chases with a 24" inside depth
- FE (fireplace efficiency as per CSA P4 listed)
- Natural gas and propane gas field convertible
- Variable Hi/Lo flame adjustment
- 18" flex line with On/Off shut-off valve included
- CSA design certified

FIREBRICK OPTIONS:

- Herringbone firebrick in Olde English; or traditional firebrick in Tavern Brown and Cottage Red (purchase of brick is required for all models).

Tavern Brown firebrick

Cottage Red firebrick

Olde English firebrick

Marquis See-Thru with Olde English brick

MARQUIS SEE-THRU

With 2160 square inches of viewing area and the ability to be installed on an outside wall, the Majestic Marquis See-Thru fireplace is an incredible addition to any two rooms - indoors or out! View the dancing flames and realistic logs through Clear-View ceramic glass and adjust the accent light using the manual dimmer to set the perfect mood. With the standard Total Signature Command™ Control – including the full function TSFSC Touch Screen Remote – operating your Marquis See-Thru fireplace is simple, convenient and energy efficient. Choose from three firebrick options, optional stainless steel outdoor facing kit and decorative arched doors with hand forged designer inlays to complete your fireplace look and make the Marquis See-Thru from Majestic truly your own.

Marquis See-Thru with Tavern Brown brick

Marquis See-Thru with Cottage Red brick and stainless steel outdoor facing kit

Standard Features

- Total Signature Command™ Control (TSC) with full function TSFSC hand held remote control included
- Center burner shut-down feature
- Clear-View ceramic glass: viewing area of 2160 square inches (total)
- Accent light provided standard with manual control dimmer
- Top venting only with 5"x 8" direct vent pipe
- Fits chases with 24" depth
- Three styles of firebrick to choose from (one required)

Optional Accessories

- Stainless steel outdoor facing kit
- Decorative arched doors with hand forged designer inlays
- Andirons
- Blower

Echelon WDV500 with optional stainless steel face and Black porcelain panels

ECHELON WIDE VIEW

With its highly modern style and leading-edge technology, the Echelon offers the next step in direct vent fireplace style. With an incredible wide viewing area but surprisingly compact design, the Echelon can be installed in just about any space. Offering standard stylish contemporary bronze glass beads and natural stone kit, as well as the convenience of ceramic glass panel (500) or anti-reflective ceramic glass (600) with a quick latch design for easy access, the Echelon fits perfectly into any modern décor. With a BTU range of 23,000 to 45,000 and standard Total Signature Command™ System remote, the Echelon from Majestic has turned up the heat on contemporary fireplace design.

All units framed in non-combustible material

Echelon WDV500 shown with optional Stone studio surround and Black porcelain panels

Echelon WDV500 shown with optional trim kit and standard Black porcelain panels

Echelon WDV600 shown with optional Contemporary face in Textured Black

Echelon WDV600 shown with optional Contemporary stainless steel face and Driftwood log set

Standard Features

- Total Signature Command™ Control (TSC) with full function TSFSC hand held remote control included
- Contemporary bronze glass and natural stone kit included
- Ceramic glass panel with quick latch system for easy access (500 only)
- Anti-reflective ceramic glass with quick latch system for easy access (600 only)
- Glass illumination light system
- Top vent (requires only 12" vertical rise before 90 degree elbow on horizontal runs)
- Black porcelain panels (600 only)

SIGNATURE COMMAND™ SYSTEM

Optional Accessories

- Black porcelain panels (500 only)
- Stone studio surround (500 only)
- Iron Age (600 only),Textured Black (600 only) and stainless steel faces
- Blower
- Driftwood log
- Multiple contemporary glass bead color options

Iron Age Contemporary Face

Echelon WDVST500 Shown with outdoor glass framing kit

ECHELON SEE-THRU

The new Echelon See-Thru – the latest addition to the Echelon series from Majestic – provides the perfect solution for any two rooms! Offering a sleek modern design, the Echelon See-Thru can be installed between two interior rooms or between an interior and exterior room – making it the only linear see-thru fireplace available on the market today that offers this dynamic design feature. Contemporary touches such as the natural stone or glass bead kits, black porcelain panels and wide-view styling, paired with the included Total Signature Command™ System with remote control, make modern serenity efficient, convenient and beautiful.

Echelon WDVST500 Shown with hand brushed stainless steel curved face

Echelon WDVST500

Echelon WDVST500 Shown with Stone studio surround

Standard Features

- Total Signature Command™ Control (TSC) with full function TSFSC hand held remote control included
- Contemporary bronze glass and stone kit
- Black porcelain panels
- Ceramic glass door with quick latch system
- Glass illumination light system

Rock/Glass Ember bed

Optional Accessories

- Outdoor facing kit
- Blower
- Trim kit
- Surrounds
- Additional glass accessory kits in multiple color options

Premium Direct Vent Fireplace Systems

Model	Fuel Type	BTU Max	BTU Min	Framing Dimensions Width	Framing Dimensions Height	Framing Dimensions Depth	Glass Frame Dim. Width	Glass Frame Dim. Height	Glass View Dim. Width	Glass View Dim. Height	FE Ratings (Cdn Fireplace Efficiency)	AFUE Efficiency ratings	Thermal Efficiency ratings	Certifying Org.
Marquis														
KHLDV400*	NG	40,000	28,500	45 5/16″	44 3/4″	23 7/8″	35 1/2″	34 1/2″	32″	30″	69.6%		Up to 80%	CSA
KHLDV400*	LP	40,000	30,500	45 5/16″	44 3/4″	23 7/8″	35 1/2″	34 1/2″	32″	30″	78.2%		Up to 80%	CSA
KHLDV500*	NG	50,000	32,500	49 5/16″	44 3/4″	23 7/8″	39″	34 1/4″	36″	30″	67.6%		Up to 80%	CSA
KHLDV500*	LP	50,000	38,500	49 5/16″	44 3/4″	23 7/8″	39″	34 1/4″	36″	30″	69.8%		Up to 80%	CSA
KHLDV600	NG	60,000	41,500	55 1/2″	50 9/16″	24 1/2″	45″	40 1/4″	42″	36″	81.0%	66.25%	Up to 85%	CSA
KHLDV600	LP	57,000	40,000	55 1/2″	50 9/16″	24 1/2″	45″	40 1/4″	42″	36″	80.0%	66%	Up to 85%	CSA

*Available in millivolt and Signature Command control

Model	Fuel Type	BTU Max	BTU Min	Framing Dimensions Width	Framing Dimensions Height	Framing Dimensions Depth	Glass Frame Dim. Width	Glass Frame Dim. Height	Glass View Dim. Width	Glass View Dim. Height	FE Ratings (Cdn Fireplace Efficiency)	AFUE Efficiency ratings	Certifying Org.
Marquis See-Thru													
KSTDV500NTSC	NG	56,000	37,000	50″	44 3/4″	23″	39 1/2″	34 1/4″	36″	30″	77.3%	67.40%	CSA
KSTDV500PTSC	LP	56,000	44,500	50″	44 3/4″	23″	39 1/2″	34 1/4″	36″	30″	74.3%	66.35%	CSA

Model	Fuel Type	BTU Max	BTU Min	Framing Dimensions Width	Framing Dimensions Height	Framing Dimensions Depth	Glass Frame Dim. Width	Glass Frame Dim. Height	Glass View Dim. Width	Glass View Dim. Height	FE Ratings (Cdn Fireplace Efficiency)	AFUE Efficiency ratings	Certifying Org.
Echelon Wide View													
WDV500NTSC	NG	34,000	23,000	46 5/8″	35 5/8″	17 7/8″	40″	17 7/8″	36 1/8″	13 3/4″	64.4%	Up to 80%	CSA
WDV500PTSC	LP	33,000	25,500	46 5/8″	35 5/8″	17 7/8″	40″	17 7/8″	36 1/8″	13 3/4″	64.7%	Up to 80%	CSA
WDV600NTSC	NG	45,000	24,000	56 3/4″	35 5/8″	18 5/8″	51″	17 7/8″	47 7/8″	14 1/4″	70.2%	Up to 80%	CSA
WDV600PTSC	LP	40,000	32,500	56 3/4″	35 5/8″	18 5/8″	51″	17 7/8″	47 7/8″	14 1/4″	72.2%	Up to 80%	CSA

Model	Fuel Type	BTU Max	BTU Min	Framing Dimensions Width	Framing Dimensions Height	Framing Dimensions Depth	Glass Frame Dim. Width	Glass Frame Dim. Height	Glass View Dim. Width	Glass View Dim. Height	FE Ratings (Cdn Fireplace Efficiency)	AFUE Efficiency ratings	Certifying Org.
Echelon See-Thru													
WDVST500NTSC	NG	34,000	27,500	51 3/4″	38 1/2″	17 3/8″	40″	17 7/8″	36 1/8″	13 3/4″	61.0%	Up to 80%	CSA
WDVST500PTSC	LP	34,000	27,500	51 3/4″	38 1/2″	17 3/8″	40″	17 7/8″	36 1/8″	13 3/4″	59.7%	Up to 80%	CSA

Optional Accessories

Marquis models only

Filigree door option

Forged andirons

Cast andirons

Forged andirons
KHLDV600 models only

See our Ambient Technologies® catalog
for a complete line of remotes and thermostats.

Variable thermostat
controlled forced air blowers

Glass Kits for WDV Echelon

Sapphire Bronze Onyx Emerald Diamond

For more information about MHSC and Majestic efficient and environmentally friendly products, please visit www.majesticproducts.com

Green

LIFETIME LIMITED WARRANTY · MADE IN NORTH AMERICA · NATIONAL FIREPLACE INSTITUTE NFI ADVOCATE · HPBA Hearth, Patio & Barbecue Association · HPBAC Hearth, Patio & Barbecue Association of Canada PROTECT • PROMOTE • EDUCATE · DESIGN CERTIFIED · CERTIFIED · AHRI MEMBER · ENERGUIDE

MAJESTIC

A Brand of Monessen Hearth Systems Co.
149 Cleveland Drive, Paris, Kentucky 40361
www.majesticproducts.com

Your Majestic Dealer:

To avoid personal injury or property damage, the product described by this brochure must be installed, operated and maintained in strict compliance with the instructions packaged with the product and all applicable building or fire codes. Contact local building or fire officials about restrictions and installation inspection requirements. All photographs and drawings on this brochure are for illustrative purposes only and are not intended for, nor should they be used as a substitute for the instructions packaged with the unit. Appearance and specifications of the product are subject to change without notice. © 2010 Monessen Hearth Systems Co.

Ver.05 8708MAJ