This Owner's Manual is provided and hosted by Appliance Factory Parts.

Appliance Factory Parts
Experts in BBQ, Humidifier, & Appliance Parts
1-800-955-7075

# EMPIRE VFP36FB2EL-3 Owner's Manual

Shop genuine replacement parts for EMPIRE VFP36FB2EL-3

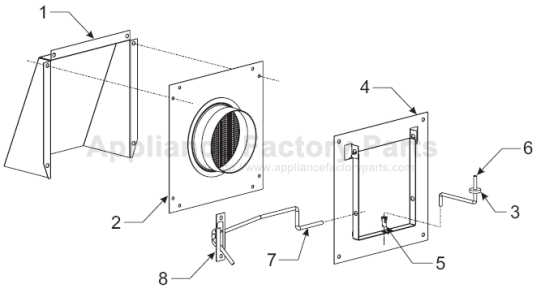


Find Your EMPIRE Fireplace Parts - Select From 642 Models

-------- Manual continues below --------

EMPIRE
COMFORT SYSTEMS

# INSTALLATION INSTRUCTIONS AND OWNER'S MANUAL

The Breckenridge
Premium Vent-Free Universal Fireboxes

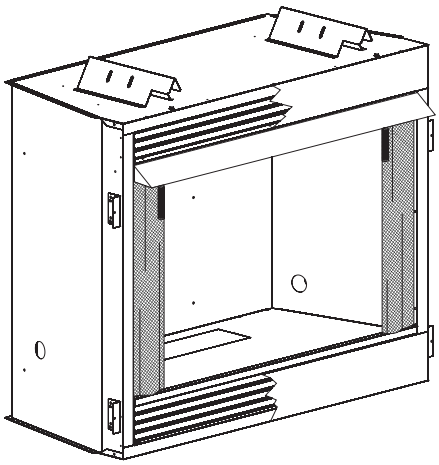

**ANSI Z21.91 Ventless Fireplace Enclosures for Gas Fired Decorative Type Unvented Room Heaters**

## UNIVERSAL FIREBOX FOR ALL VENT-FREE LOG SETS

**MODELS**

| | | |
|---|---|---|
| VFP32FB2DL-4 | VFP36FB2DL-4 | VFP42FB2DL-4 |
| VFP32FB2CL-3 | VFP36FB2CL-3 | VFP42FB2CL-3 |
| VFP32FB2EL-3 | VFP36FB2EL-3 | VFP42FB2EL-3 |
| VFP32FB2DF-4 | VFP36FB2DF-4 | VFP42FB2DF-4 |
| VFP32FB2CF-3 | VFP36FB2CF-3 | VFP42FB2CF-3 |
| VFP32FB2EF-3 | VFP36FB2EF-3 | VFP42FB2EF-3 |

GAS-FIRED
UL
LISTED

**WARNING: If the information in these instructions are not followed exactly, a fire or explosion may result causing property damage, personal injury or loss of life.**

— **Do not store or use gasoline or other flammable vapors and liquids in the vicinity of this or any other appliance.**

— **WHAT TO DO IF YOU SMELL GAS**
- **Do not try to light any appliance.**
- **Do not touch any electrical switch; do not use any phone in your building.**
- **Immediately call your gas supplier from a neighbor's phone. Follow the gas supplier's instructions.**
- **If you cannot reach your gas supplier, call the fire department.**

— **Installation and service must be performed by a qualified installer, service agency or the gas supplier.**

**DO NOT ATTEMPT TO MODIFY OR ALTER THE CONSTRUCTION OF THE FIREBOX OR ITS COMPONENTS. ANY MODIFICATION OR ALTERATION OF CONSTRUCTION MAY VOID THE WARRANTY OF THIS FIREBOX.**

**CHILDREN AND ADULTS SHOULD BE ALERTED TO THE HAZARDS OF HIGH SURFACE TEMPERATURE AND SHOULD STAY AWAY TO AVOID BURNS OR CLOTHING IGNITION.**

**YOUNG CHILDREN SHOULD BE CAREFULLY SUPERVISED WHEN THEY ARE IN THE SAME ROOM AS THE FIREBOX.**

NATIONAL FIREPLACE INSTITUTE®
NFI
CERTIFIED
www.nficertified.org

We suggest that our gas hearth products be installed and serviced by professionals who are certified in the U.S. by the National Fireplace Institute® (NFI) as NFI Gas Specialists.

**Installer:** **Leave this manual with the appliance.**
**Consumer:** **Retain this manual for future reference.**

**FOR USE ONLY WITH A LISTED GAS-FIRED UNVENTED DECORATIVE ROOM HEATER NOT TO EXCEED 40,000 BTU/H.**

**DO NOT BUILD A WOOD FIRE.**

**WARNING: Improper installation, adjustment, alteration, service or maintenance can cause injury or property damage. Refer to this manual. For assistance or additional information, consult a qualified installer, service agency or the gas supplier.**

**Carefully review the instructions supplied with the decorative type unvented room heater for the minimum fireplace size requirement.**

**DO NOT INSTALL A VENT-FREE LOG SET IN THIS FIREBOX, UNLESS THIS FIREBOX MEETS THE MINIMUM DIMENSIONS REQUIRED FOR THE INSTALLATION.**

# TABLE OF CONTENTS

SECTION PAGE


Important Safety Information ..... 3

Introduction ..... 3

Clearances ..... 4-5

Firebox Installation Instructions ..... 6-8

Installing Hood ..... 8-9

Gas Line Connection ..... 9

Optional Fresh Air Kit Installation Instructions ..... 10-12

Optional Single Speed Blower Installations Instructions ..... 13-15

Junction Box Wiring Installation Instructions ..... 16

Maintenance ..... 16

Parts List ..... 17-18

Parts View ..... 19

Accessories ..... 20-21

Master Parts Distributor List ..... 22

How to Order Repair Parts ..... 22

Service Notes ..... 23

# IMPORTANT SAFETY INFORMATION

**The installation must conform with local codes or, in the absence of local codes, with the National Fuel Gas Code, ANSI Z223.1 (latest edition) and to the National electrical Code, ANSI/NFPA70 (latest edition).**

**NOTE: Installation and repair should be done by a qualified service person. The appliance should be inspected before use and at least annually by a qualified service person. More frequent cleaning may be required due to excessive lint from carpeting, bedding material, etc. It is imperative that control compartment, burners and circulating air passageways of the appliance be kept clean.**

**Any safety screen or guard removed for servicing an appliance must be replaced prior to operating the appliance. Provide adequate combustion and ventilation air.**

**The flow of combustion and ventilation air MUST NOT be obstructed.**

**Provide adequate clearance around air openings into the combustion chamber and adequate accessibility clearance for servicing and proper operation. NEVER obstruct the front opening of the appliance.**

**This Empire Comfort Systems, Inc. firebox and its components have been tested and will operate safely when installed in accordance with this installation manual. Read all instructions before starting installation, then follow these instructions carefully during installation to maximize firebox benefit and safety. Report to your dealer any parts damaged in shipment.**

**The Empire Comfort Systems, Inc. warranty will be voided by, and Empire Comfort Systems, Inc. disclaims any responsibility for the following actions:**

- **Installation of any damaged firebox.**
- **Modification of the firebox or any of the components parts thereof.**
- **Installation other than as instructed by Empire Comfort Systems, Inc.**
- **Installation and/or use of any component part or accessory not approved by Empire Comfort Systems, Inc. in combination or assembly with a Empire Comfort Systems, Inc. firebox, not withstanding any independent testing laboratory or other third party approval of such component part or accessory.**

**Any such action may create a possible fire hazard. Consult your local building codes.**

**Firebox Screen.**
**The firebox screen must be in place when the firebox is operating.**

# INTRODUCTION

**Instructions to Installer**

1. Installer must leave instruction manual with owner after installation.
2. Installer must have owner fill out and mail warranty card supplied with firebox.
3. Installer should show owner how to start and operate log set that is installed into firebox.

**Important**

All correspondence should refer to complete Model Number, Serial Number.

Notice: During initial firing of this firebox with a log set installed, its paint will bake out, and smoke will occur. To prevent triggering of smoke alarms, ventilate the room in which the unit is installed.

**Qualified Installing Agency**

Installation and replacement of gas piping, gas utilization equipment or accessories and repair and servicing of equipment shall be performed only by a qualified agency. The term "qualified agency" means any individual, firm, corporation or company which either in person or through a representative is engaged in and is responsible for (a) the installation or replacement of gas piping or (b) the connection, installation, repair or servicing of equipment, who is experienced in such work, familiar with all precautions required and has complied with all the requirements of the authority having jurisdiction.

State of Massachusetts: The installation must be made by a licensed plumber or gas fitter in the Commonwealth of Massachusetts. The state of Massachusetts requires that a flexible appliance connector cannot exceed three feet in length.

Sellers of unvented propane or natural gas-fired supplemental room heaters shall provide to each purchaser a copy of 527 CMR 30 upon sale of the unit.

In the State of Massachusetts, unvented propane and natural gas-fired space heaters shall be prohibited in bedrooms and bathrooms.

The installation must conform with local codes or, in the absence of local codes, with the National Fuel Gas Code, ANSI Z223.1/NFPA 54.*

*Available from the American National Standards Institute, Inc., 11 West 42nd St., New York, N.Y. 10036.

# CLEARANCES

**Sidewall Clearances:** The clearance from the inside of the firebox to perpendicular combustible side wall should not be less than 6". **See Figure 1.**

**Firebox Side and Back Clearances:** The firebox outer casing side and back flanges are zero clearance to combustibles.

**Top Framing and Finishing:** Combustible framing may rest on top of standoffs. Combustible finishing materials may extend to the top standoff screws on the front edge of the outer wrap. **See Figures 2a & 2b**.

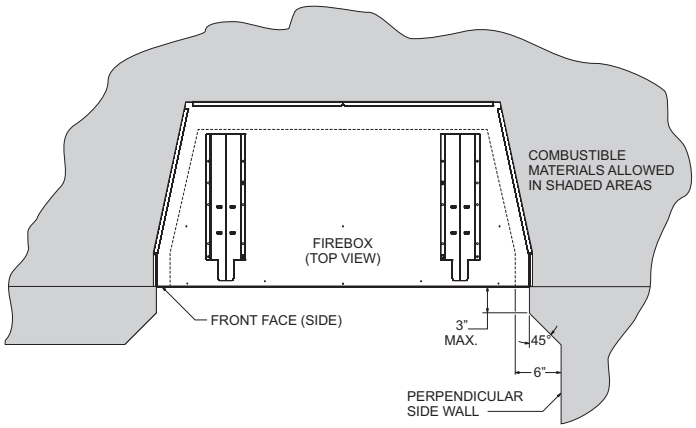


**Figure 1**

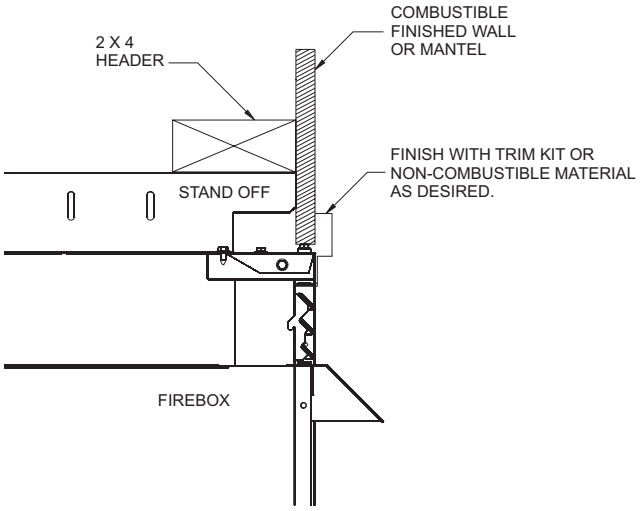


**Figure 2a - Louvered Models**

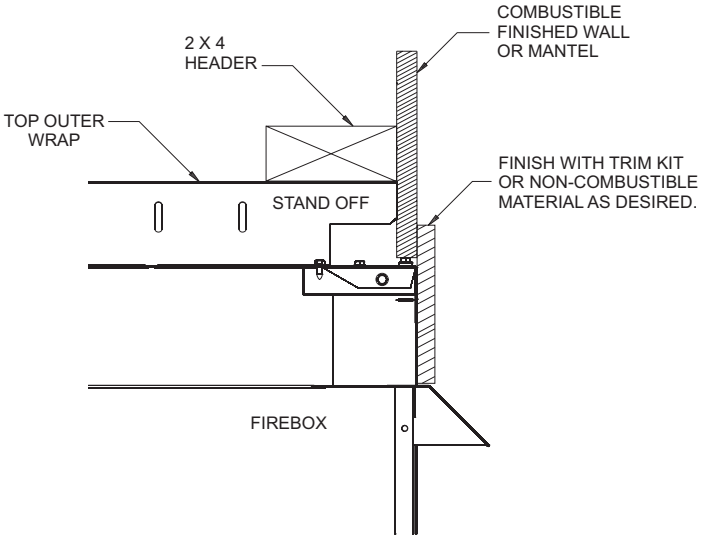


**Figure 2b - Flush Models**

# CLEARANCES

**Ceiling Clearances:** The ceiling height should not be less than 42" from the top of the hood. **See Figures 3a and 3b.**

**Mantel Clearances:** Vent free firebox models must use the hood supplied with the firebox, or one of the optional hood kits available for each model. If a combustible mantel is installed, it must meet the clearance requirements detailed below.

**Grate Clearance:** The minimum clearance between the front legs of the grate and front edge of the firebox is 2".

Leave at least 36" clearance from the front of the firebox.

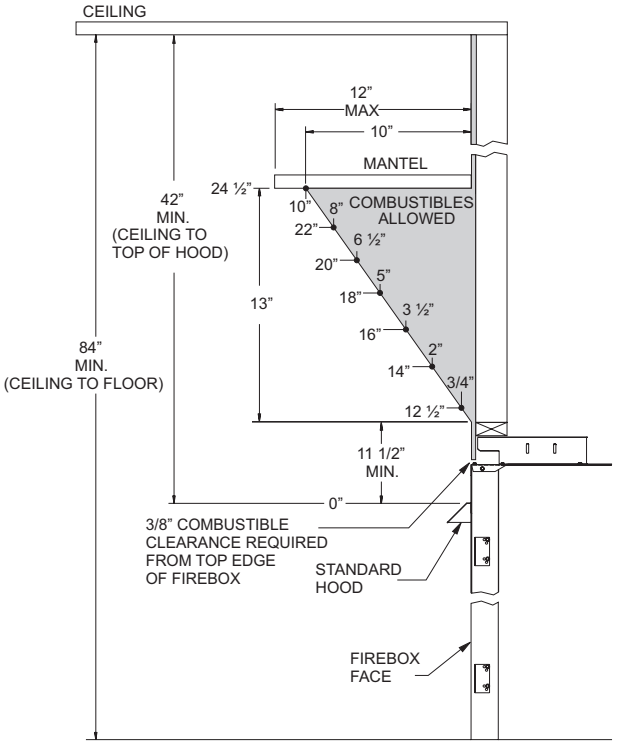


**Figure 3a - Mantel Clearances with Standard Hood**

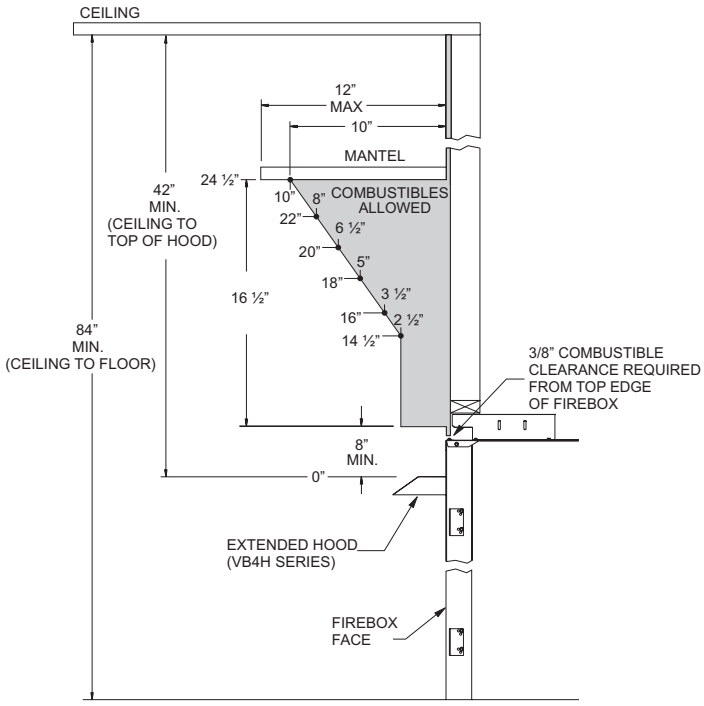


**Figure 3b - Mantel Clearances with Optional Extended Hood**

# FIREBOX INSTALLATION INSTRUCTIONS

Any vent-free Gas Log Heater must be "For use with approved ANSI Z21.11.2 unvented room heater."

Follow and complete the installation instructions of the gas log set and the requirements of this firebox.

Check all fittings for leaks before lighting the gas log set.

In planning the installation for the firebox, it is necessary to determine where the unit is to be installed and whether optional accessories are desired. Gas supply piping should also be planned at this time.

**A gas shut off must be in this line.**

The firebox can be mounted on any of these surfaces:

1. A flat hard combustible or non-combustible surface.
2. A raised platform of combustible or non-combustible material.
3. Recessed into the floor as illustrated by **Figure 4** (flush face), and **Figure 5** (louvered models).
4. Supported under all (4) corners of the firebox so that contact is made on all four perimeter edges on the bottom of the unit (Example: Four (4) concrete masonry blocks).

If the firebox is installed directly on carpeting, tile or other combustible material other than wood flooring, it should be installed on a metal or wood panel extending the full width and depth of the unit.

At this point, you should have decided what components to include in your installation, and where the firebox is to be located. If this has not been done, stop and consult your dealer for assistance with this planning.

**Planning Your Installation**

Please note that the optional BVA1 Fresh Air kit available for use with the Vent Free Firebox must be installed at the time of the initial installation. Refer to pages 10, 11 and 12 for detailed instructions for the air kit.

Accessory kits such as the FBB5 Blower kit, Trim kits, Mantles, Full Cabinet Mantels, plus other Decorative Frame, Hood, and Door accessory kits may be installed after the firebox is secured to the framed opening.

Refer to the instructions provided with each of the optional accessory kits for proper installation and operation.

**Firebox Framing**

Firebox framing can be built before or after the firebox is set in place. Framing should be positioned to accommodate wall covering and firebox facing material. The firebox framing should be constructed of 2 x 4 lumber or heavier. The framing headers may rest on the top of the firebox standoffs. Refer to **Figures 6 and 7** for firebox framing dimensions.

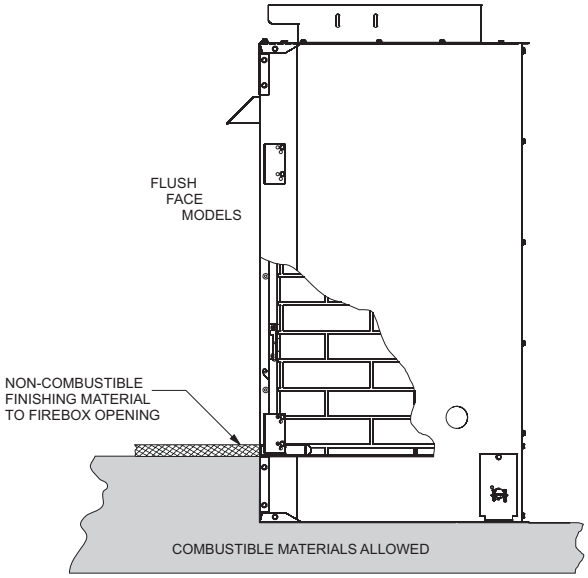


**Figure 4**

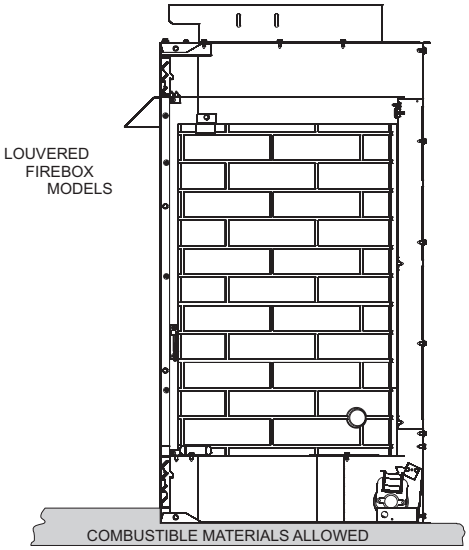


**Figure 5**

**Premium Vent-Free Firebox Framing Dimensions (in inches)**

| | "A" | "B" | "C" |
|---|---|---|---|
| Model | Framing Height | Framing Width | Framing Depth |
| VFP32FB | 41 1/2" | 35" | 21" |
| VFP36FB | 41 1/2" | 40" | 21" |
| VFP42FB | 41 1/2" | 44" | 21" |

**Attention:** Add 3-3/4" to "A" Dimension when using flush mantel base.

**Framing dimension A includes a three inch clearance for standoffs on firebox.**

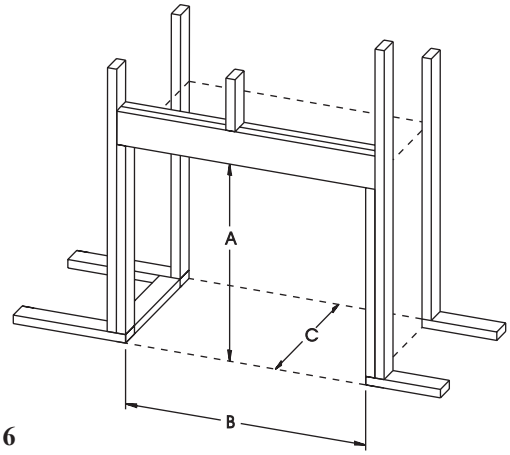


**Figure 6**

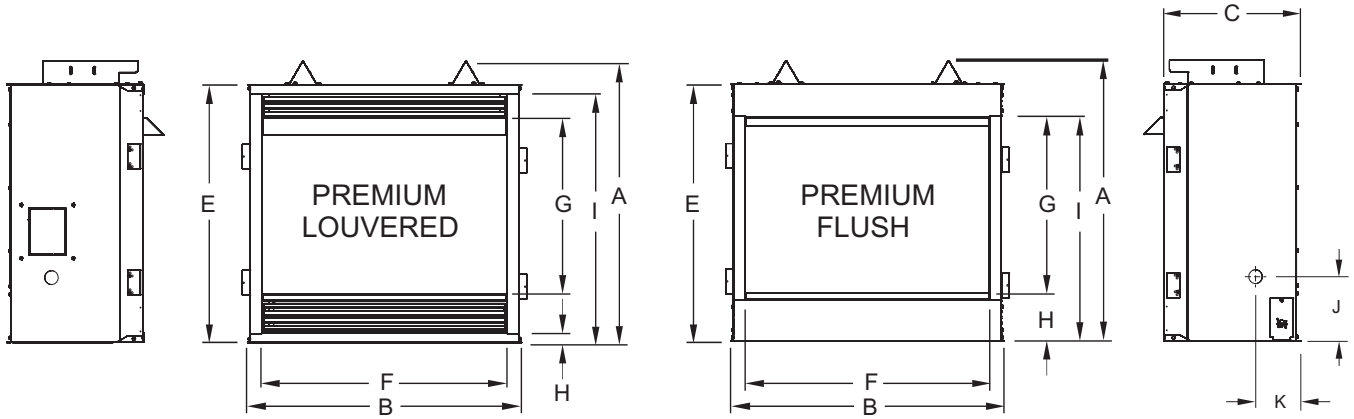


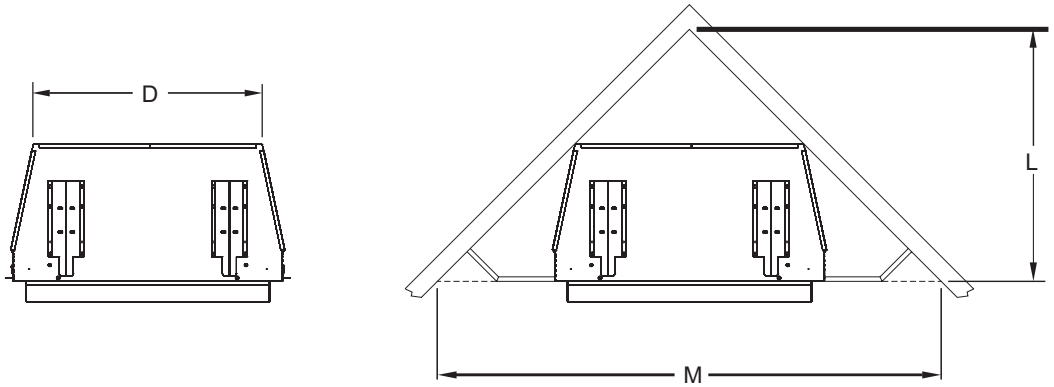


| | PREMIUM | | | | | |
|---|---|---|---|---|---|---|
| | LOUVERED | | | FLUSH | | |
| | VFP32 | VFP36 | VFP42 | VFP32 | VFP36 | VFP42 |
| **A** | 41 1/8” | 41 1/8” | 41 1/8” | 41 1/8” | 41 1/8” | 41 1/8” |
| **B** | 34 1/2” | 39 1/2” | 43 1/2” | 34 1/2” | 39 1/2” | 43 1/2” |
| **C** | 21 7/16” | 21 7/16” | 21 7/16” | 21 7/16” | 21 7/16” | 21 7/16” |
| **D** | 27 1/4” | 32 1/4” | 36 1/4” | 27 1/4” | 32 1/4” | 36 1/4” |
| **E** | 38 1/2” | 38 1/2” | 38 1/2” | 38 1/2” | 38 1/2” | 38 1/2” |
| **F** | 31” | 36” | 40” | 31” | 36” | 40” |
| **G** | 27 13/16” | 27 13/16” | 27 13/16” | 27 13/16” | 27 13/16” | 27 13/16” |
| **H** | 1 1/4” | 1 1/4” | 1 1/4” | 6 1/8” | 6 1/8” | 6 1/8” |
| **I** | 37” | 37” | 37” | 34” | 34” | 34” |
| **J** | 8 3/8” | 8 3/8” | 8 3/8” | 8 3/8” | 8 3/8” | 8 3/8” |
| **K** | 5 5/8” | 5 5/8” | 5 5/8” | 5 5/8” | 5 5/8” | 5 5/8” |
| **L** | 35” | 39 1/2” | 39 1/2” | 35” | 37 1/2” | 39 1/2” |
| **M** | 69 15/16” | 78 15/16” | 78 15/16” | 69 15/16” | 74 13/16” | 78 15/16” |

**Figure 7**
Firebox Dimensions

# FIREBOX INSTALLATION INSTRUCTIONS (continued)

**Locating Firebox**

Place firebox in framing opening. Use the four (4) framing brackets provided on the firebox to attach firebox to framing. Different hole locations can be used for finishing materials with thicknesses of 3/8", 1/2" and 3/4". Attach these materials with screws provided, two (2) per framing bracket. **See Figure 8.**

Framing brackets should fit directly against framing material. Use at least one (1) nail per bracket to secure in place.

Check squareness of the firebox prior to securing to framed opening. **See Figure 9.**

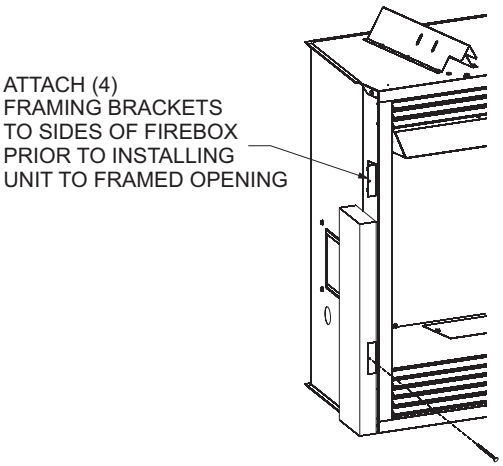


**Figure 8**

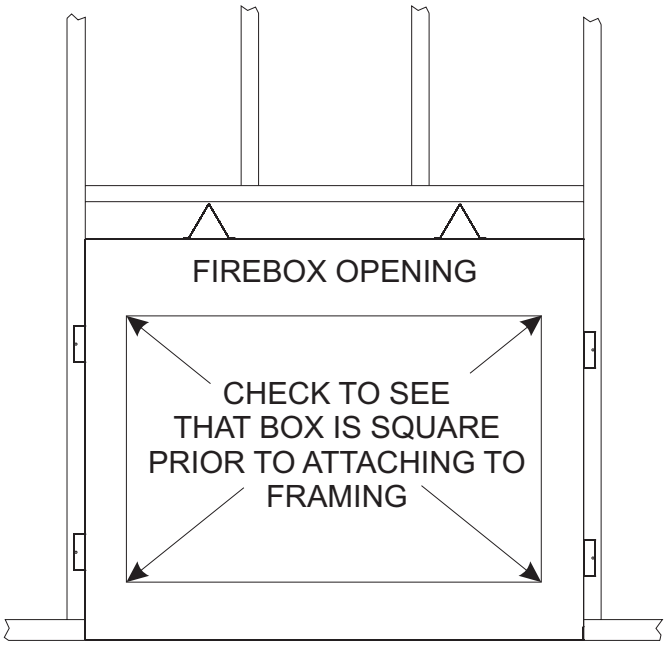


**Figure 9**

# INSTALLING HOOD

A black hood that is furnished with each firebox (or optional hood) MUST be installed before the firebox is used. Failure to do so may create a possible fire hazard. The hood is located behind upper louver, or inside the firebox on flush face units. If brass, stainless steel, or hammered pewter hoods are desired, they can be purchased as an option. Attachment is the same as the standard black hood.

**Flush Face Models**

1. On flush face models, loosen the two screws (A) holding firebox top to face panel, then slide the hood flange between the firebox top and face panel and re-tighten the screws.
2. Install one (1) screw at each end of the hood as shown (C).

**Louvered Models**

1. If you have a louvered model, remove upper louver.
2. Place the top hood flange on top of the firebox, then install three screws through the firebox top from below and screw into the pilot holes in the hood flange (B).
3. Install one (1) screw at each end of the hood as shown (C).
4. Re-install louver.

**Caution:** The hood must be installed prior to operation of appliance. **See Figure 10**

**Flush Face Models**

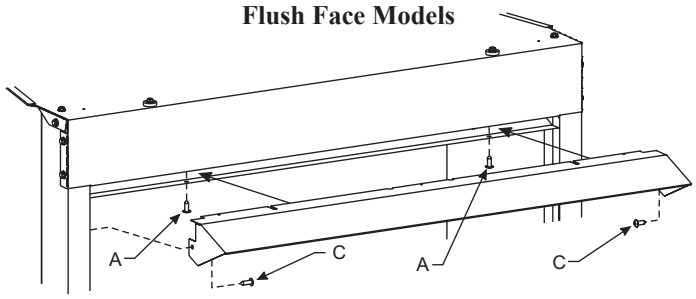


**Louvered Models**

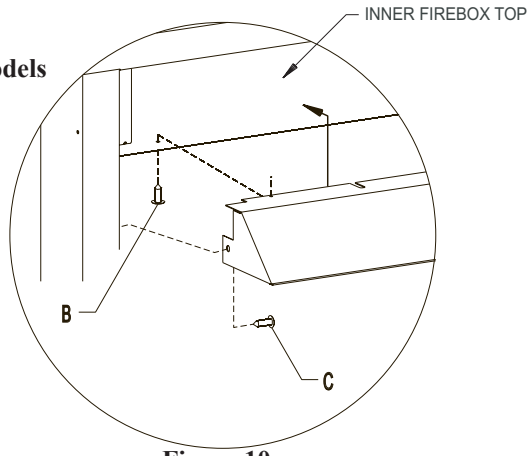


**Figure 10**

# INSTALLING HOOD (continued)

**Extended Hoods**

If your non-combustible facing material is over 1" in thickness that will be used to finish this firebox, an extended hood is available that will extend out 2" farther out into the room. Contact your local dealer for details.

| | |
|---|---|
| VB4H32BL | Standard Black |
| VB4H32BR | Polished Brass |
| VB4H32SS | Stainless Steel |
| VB4H32HP | Hammered Pewter |

| | |
|---|---|
| VB4H36BL | Standard Black |
| VB4H36BR | Polished Brass |
| VB4H36SS | Stainless Steel |
| VB4H36HP | Hammered Pewter |

| | |
|---|---|
| VB4H42BL | Standard Black |
| VB4H42BR | Polished Brass |
| VB4H42SS | Stainless Steel |
| VB4H42HP | Hammered Pewter |

**Finishing**

All joints (top, bottom and sides), where the wall or decorative facing material meets the firebox surround should be sealed with a non-combustible material.

Hearth extensions are recommended, but not required for these fireboxes.

# GAS LINE CONNECTION

The firebox is designed to accept a 3/8-inch gas line for an approved vent-free gas logset. Have the line installed by a qualified service person in accordance with all building codes. Consult local building codes to properly size the gas supply line leading to the 3/8-inch hook-up at the unit. The state of Massachusetts requires that a flexible appliance connector cannot exceed three feet in length.

Gas access holes are provided on both sides of the firebox. **See Figure 11**. On models with ceramic brick panels installed, carefully remove the indented knockout in the ceramic brick panel using a drill or utility knife. **See Figure 12.**

When installing optional ceramic fiber side panels into firebox, lay panel on a flat surface. Remove the gas line knockout (round depression) in the appropriate side panel using a drill or utility knife.

Check gas type. Use only the gas type indicated on the gas log set rating plate. If the gas listed on the plate is not your type of gas supply, DO NOT INSTALL. Contact your dealer for proper model.

Always use an external regulator for all LP fireboxes to reduce the supply tank pressure to a maximum of 14" w.c. This is in addition to the regulator fitted to the log set.

WARNING: CONNECTION DIRECTLY TO AN UNREGULATED L.P. TANK CAN CAUSE EXPLOSION.

Install only a ANSI Z21.11.2 vent-free log set into this firebox.

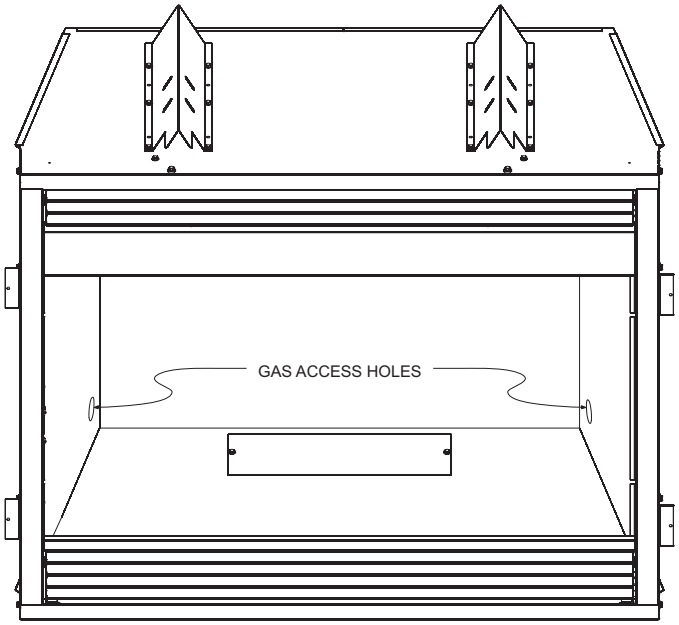


**Figure 11**

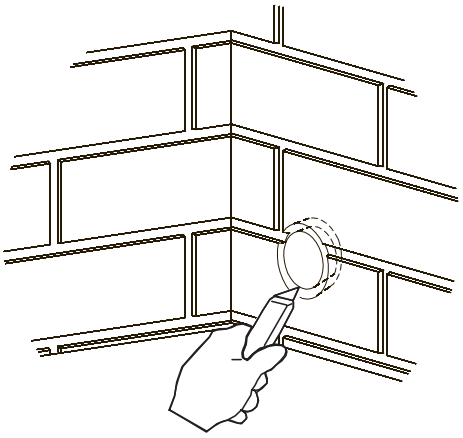

**Figure 12**

# OPTIONAL FRESH AIR KIT INSTALLATION INSTRUCTIONS FOR DELUXE AND PREMIUM FIREBOXES

The optional BVA1 Fresh Air Kit is designed to introduce outside air to the fireplace or firebox as desired.
It must be installed prior to, or at the time of fireplace or firebox installation to framing.
The Fresh Air kit must be installed prior to the installation of wallboard or other finishing materials around the unit.

Tools needed: Gloves, Metal snips, Vise-Grip, ¼" Nut Driver, Standard Screwdriver
**Caution: Sharp edges**

**Air Door Installation for Vent Free Firebox Models: VFP(32,36,42)FB**

1. Begin by removing the rectangular cutout located on the left side of the firebox. Use gloves and sheet metal snips to create the opening for the Air Door assembly to install into. **See Figures 13 and 14.**

**Figure 13**

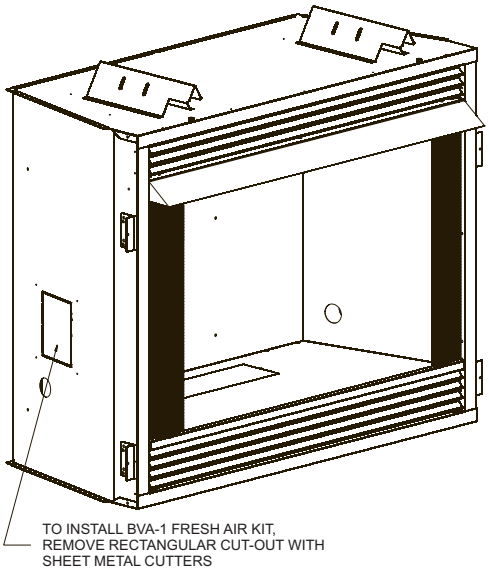


**Figure 14**

2. Move the left hand curtain screen to the center of the firebox opening.
3. Grasp the long control rod lever with control bracket (items 7 and 8 in **Fresh Air Kit Parts List**) securely with a vise grips as shown in **Figure 15**.

**Figure 15**

4. Next, with the vise grip attached, feed the long control rod through the small rectangular opening at the left side of the firebox face. Carefully position the rod and bracket so that the bracket can be secured to the inside opening of the firebox with two screws. **See Figure 16.** Do not remove vise grips at this time.

**Figure 16**

5. Working from the side cutout opening, place the slightly opened air door assembly into the cutout opening as shown in **Figure 17**.

**Figure 17**

6. While holding the door assembly in your left hand, grasp the vise grip (attached to the long control rod). Rotate and move the control rod around until the inside end of the rod is mated

with the hole in the front flange of the movable air door. **See Figure 18.**

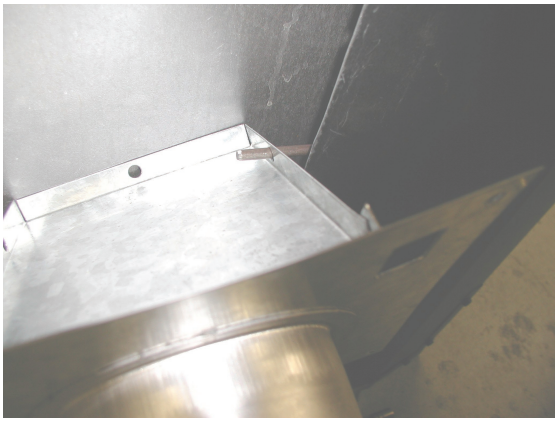

**Figure 18**

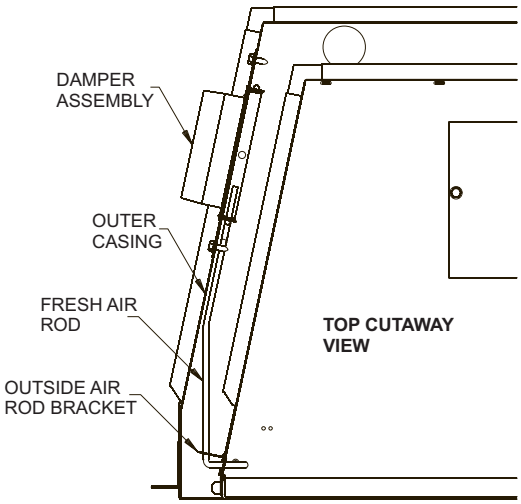


**Figure 19**

7. Once the control rod is fed through the air door hole, gently lift the outer air door plate assembly inward and upward until the mounting holes in the plate line up with the pilot holes in the side wrap.
8. Install (4) screws to retain the Air Door assembly. **See Figure 20.**

**Figure 20**

9. Remove vise grip from control rod, then check the operation of the Air Door. The control lever should open the air door when rotated upward, and can be locked open by pulling forward into the notch at the top of the control lever bracket.
10. To close, simply disengage by letting the lever rotate downward. The air door will remain closed by magnetic action. **See Figure 21.**

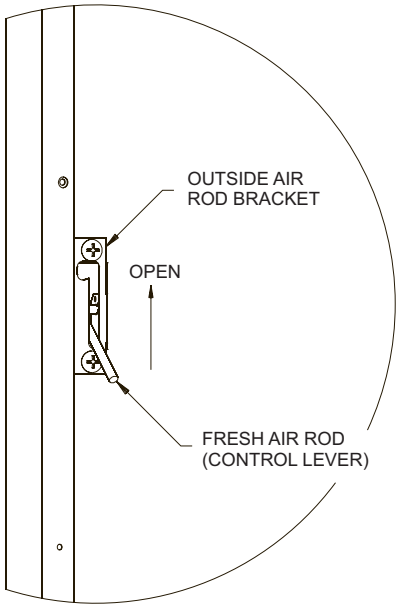


**LEFT SIDE VIEW OF FIREBOX OPENING**

**Figure 21**

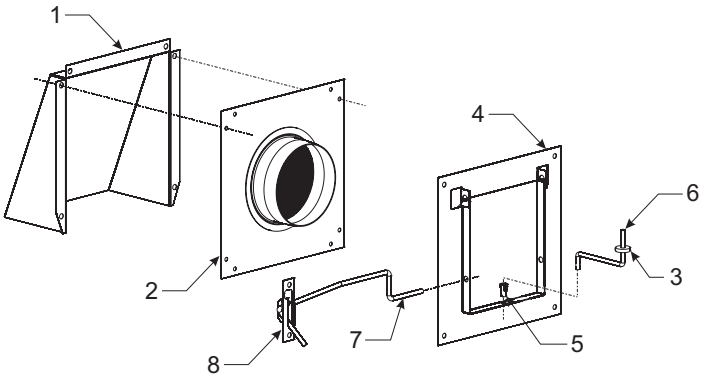


**FRESH AIR KIT PARTS LIST**

| INDEX NO. | PART NO. | DESCRIPTION | QUANTITY SUPPLIED |
|---|---|---|---|
| 1 | 10124 | OUTSIDE AIR HOOD | 1 |
| 2 | 18476 | OUTSIDE AIR TUBE ASSEMBLY | 1 |
| 3 | R8196 | WASHER, SILICONE (BV) | 1 |
| 4 | 19548 | DAMPER ASSEMBLY | 1 |
| 5 | R8047 | TUBULAR CLIP (BV) | 1 |
| 6 | R8189 | ROD, FRESH AIR (BV) | 1 |
| 7 | R8703 | ROD, AIR CONTROL (FB) | 1 |
| 8 | 20473 | BRACKET, OUTSIDE AIR ROD (FB) | 1 |

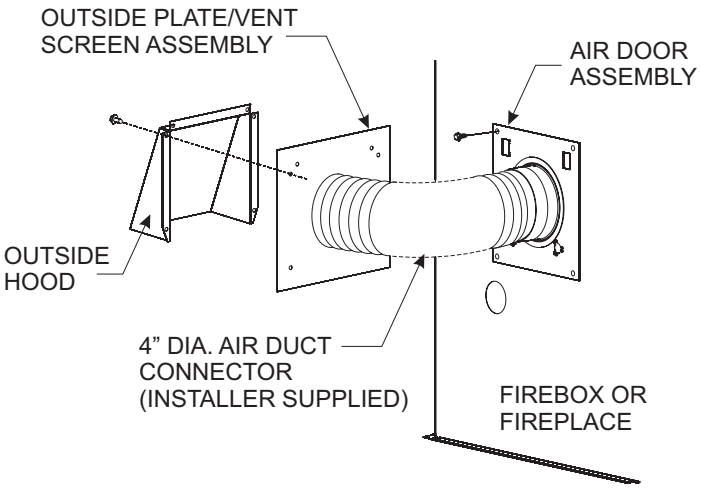


**Figure 22**

**Completion of Air Kit installation**

1. Determine the length of 4" Dia. rigid or flex duct connector (installer supplied) you will need from the firebox/fireplace to the exterior surface of the outside wall, where the air kit hood will be installed. Add a few extra inches to the length to allow for easier attachment of the outside duct connection prior to securing the outside rain cap hood to the building.
2. Secure the 4" dia. duct to the Air Door assembly collar on the firebox/fireplace with band clamps or screws.
3. Run the other end of the duct through the exterior wall cut-out.
4. From the outside of the building, connect the duct to the collar on the outside air vent assembly with band clamp or screws to secure.
5. Mate the outside rain cap hood over the air vent, seal with caulk as necessary, then secure with screws provided to the exterior wall surface. See **Figure 22 and 23.**
6. **Figure 24** illustrates the various options for installation of the air duct run possibilities.

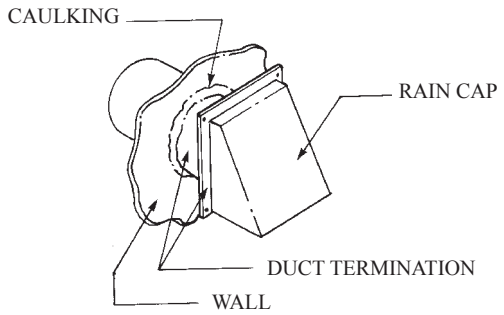


Caulk and Install Duct Termination

**Figure 23**

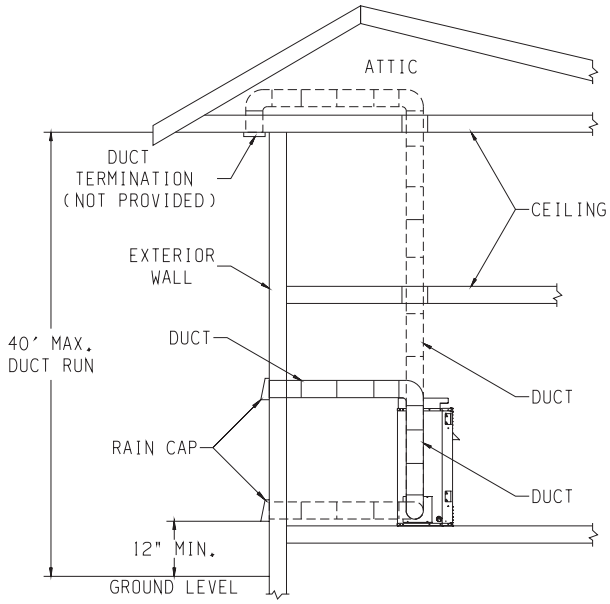


**Figure 24**

**Attention:** Install blower assembly before connecting gas inlet supply line.

**Wiring**

The appliance, when installed, must be electrically grounded in accordance with local codes or, in the absence of local codes, with the *National Electrical Code, ANSI/NFPA 70*, if an external electrical source is utilized. **This appliance is equipped with a three-prong [grounding] plug for your protection against shock hazard and should be plugged directly into a properly grounded three-prong receptacle. Do not cut or remove the grounding prong from this plug.** For an ungrounded receptacle, an adapter, which has two prongs and a wire for grounding, can be purchased, plugged into the ungrounded receptacle and its wire connected to the receptacle mounting screw. With this wire completing the ground, the appliance cord plug can be plugged into the adapter and be electrically grounded.

**Caution:** Label all wires prior to disconnection when servicing controls. Wiring errors can cause improper and dangerous operation. Verify proper operation after servicing.

**Note:** Junction box on right side of firebox must be pre-wired at time of firebox installation for use with blower assembly. A standard wall ON/OFF wall switch or optional SCV1 Variable Speed Control Kit should be installed to activate power to the Firebox, and control the operation of the FBB5 Blower assembly. It is recommended that installation of the wiring be performed by a qualified electrician. **See Figure 25.**

1. If installed, turn OFF gas supply to firebox/gas log.
2. If applicable, turn OFF electric supply to firebox.
   **CAUTION:** ALL WIRING SHOULD BE DONE BY A QUALIFIED ELECTRICIAN AND SHALL BE IN COMPLIANCE WITH ALL LOCAL, CITY AND STATE BUILDING CODES. BEFORE MAKING THE ELECTRICAL CONNECTION, MAKE SURE THAT MAIN POWER SUPPLY IS DISCONNECTED. THE APPLIANCE, WHEN INSTALLED, MUST BE ELECTRICALLY GROUNDED IN ACCORDANCE WITH LOCAL CODES, WITH THE NATIONAL ELECTRICAL CODE ANSI/NFPA 70 (LATEST EDITION).

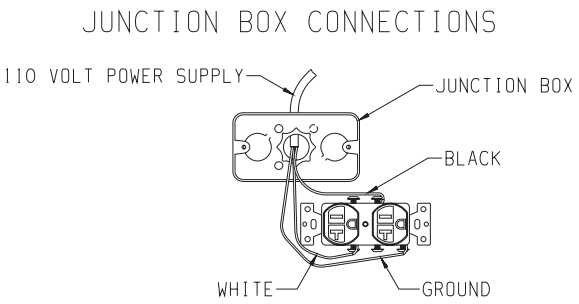


**Figure 25**

A factory installed junction box is located on the lower right side of the firebox. Wiring must be fed to the junction box and attached to the receptacle that is provided. From right side of the firebox, remove the screw securing the junction box assembly. Leave approximately 6” of wire in the junction box for connection.

Attach black wire to one side of the receptacle and white wire to opposite side of receptacle. The ground wire should be attached to the green (ground) screw.

Install the receptacle into the junction box. Attach cover plate.

**Attention:** If installed, do not damage gas inlet supply line when blower assembly is inserted into firebox. In some cases, removal the gas inlet supply line may be necessary.

3. Determine which type of firebox you have prior to installation. **See Figures 26 and 27**.

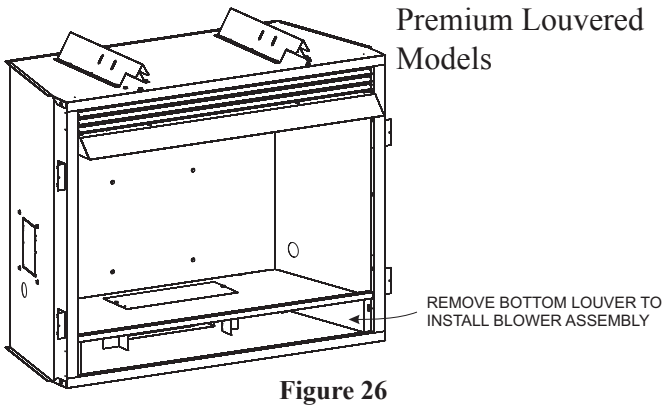


**Figure 26**

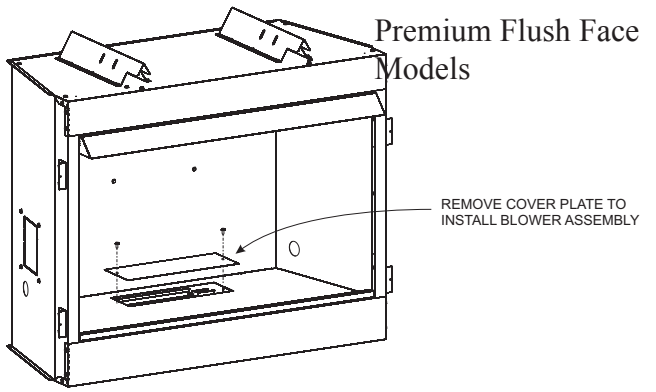


**Figure 27**

4. Insert blower assembly into interior, bottom of firebox. Position blower assembly so that you align the notch on back of blower assembly with the center screw on firebox back, then push the blower assembly against firebox back. The blower wheel must be centered with the back wall of the firebox. The magnets on the back and bottom of blower assembly will sufficiently hold blower assembly in place.

**Note:** For field installation of blower assembly, it may be easier to remove rear cover panel to install blower. This eliminates the need to remove brick liner panels, but the blower would have to be installed prior to installing the firebox into a wall or chase. **See Figure 28.**

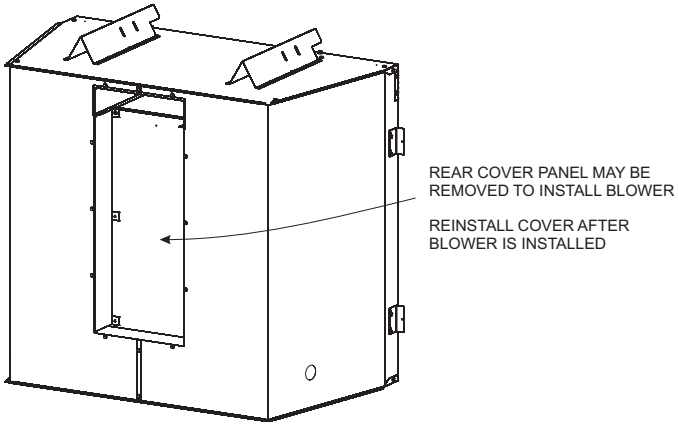


**Figure 28**

5. Once the blower assembly is in position, locate the plug button in the top right rear corner of the firebox. Remove the plug with a standard screwdriver and discard plug.
6. Next, find the fan control switch and wire assembly. Feed the wires through the hole at the top of the firebox, and secure the fan control switch with (2) #6 screws provided. **See Figure 29.**

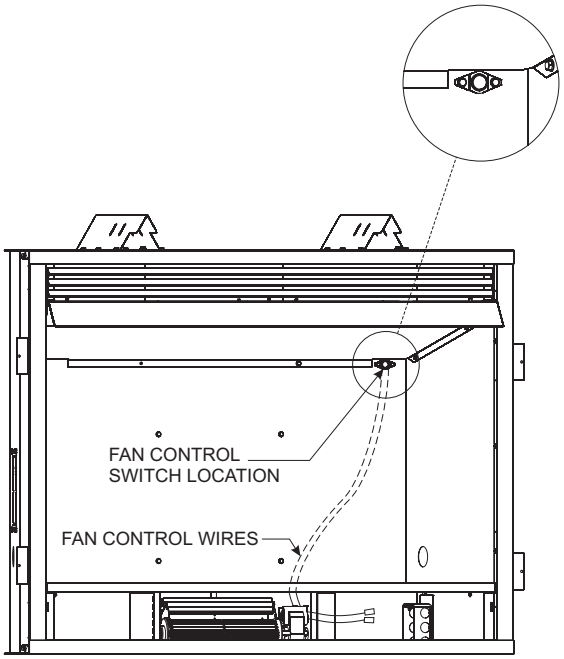


**Figure 29**

7. The fan control wires will slide down between the firebox and outer wrap near the blower assembly. **See Figure 29**.
8. One fan control wire will have a 1/4” female terminal that must be attached to the open terminal on the blower motor. **See Figure 32, Connection A.**
9. The other fan control wire has a 1/4” male terminal. Attach this terminal to the open terminal on the blower power cord. **See Figure 32, Connection B**
10. Route the wires away from moving parts of the blower assembly and retain wires together near the blower motor using the plastic purse clip provided.
11. To complete the installation, plug the power cord into the junction box receptacle at the right rear corner of the firebox outer wrap. **See Figure 30.**
12. If room permits, the power cord can be located from the outside of the unit looking through the junction box access hole (with the junction box removed), then plug up the power cord before reinstalling the pre-wired junction box.
13. Once all connections are made electrically, it is recommended that you test the blower fan control operation by turning on power to the blower (Caution: 110 Volt). Then apply heat to the fan control switch inside the firebox with a lighter or match until blower is activated. Once blower is activated, check for proper operation. Do not place hands near blower assembly or other wiring while power is on.
14. Replace blower access plate and/or reinstall the brick liner panels if provided.
15. This completes the installation of the optional FBB5 Blower kit accessory.

**Note:** This blower is equipped with a heat activated fan control switch. Blower will operate when the firebox warms up, and will turn off automatically when the firebox cools down.

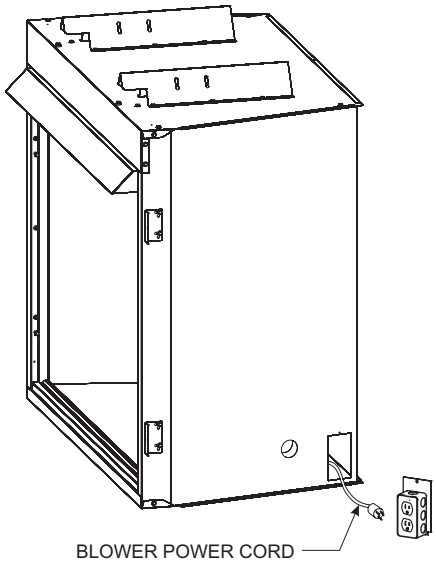


**Figure 30**

**Blower Motor**
The blower motor does not have oiling holes. Do not attempt to oil the blower motor.

**Blower Wheels**
The blower wheels will collect lint and could require periodic cleaning. If the air output decreases or the noise level increases, it indicates a dirty blower wheel. Remove fan and clean blower wheels.

> **Warning:** Unplugging of blower accessory will not stop the heater from cycling. To turn off gas to the heater (millivolt model): push in gas control knob slightly and turn clockwise to "OFF." Do not force. To turn off gas on direct ignition model, turn gas line valve to "OFF."

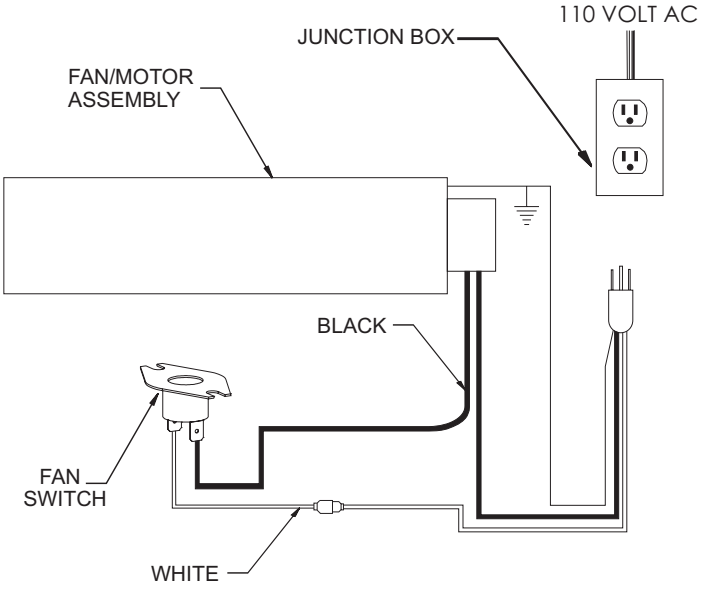


**Figure 31**

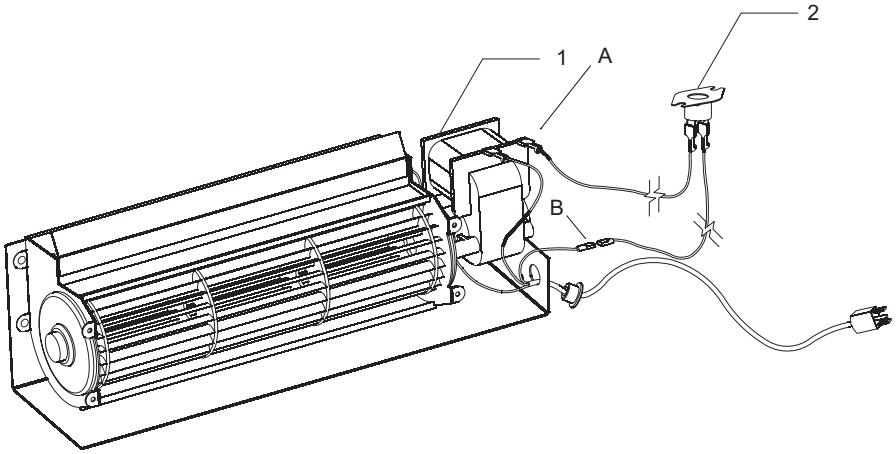


| | | |
|---|---|---|
| 1 | FBB5 | BLOWER ASSEMBLY COMPLETE |
| 2 | R8199 | FAN CONTROL SWITCH |

**Figure 32**

# JUNCTION BOX WIRING INSTALLATION INSTRUCTIONS

**CAUTION: ALL WIRING SHOULD BE DONE BY A QUALIFIED ELECTRICIAN AND SHALL BE IN COMPLIANCE WITH ALL LOCAL, CITY AND STATE BUILDING CODES. BEFORE MAKING THE ELECTRICAL CONNECTION, MAKE SURE THAT MAIN POWER SUPPLY IS DISCONNECTED. THE APPLIANCE, WHEN INSTALLED, MUST BE ELECTRICALLY GROUNDED IN ACCORDANCE WITH LOCAL CODES OR, IN THE ABSENCE OF LOCAL CODES, WITH THE NATIONAL ELECTRICAL CODE ANSI/NFPA 70 (LATEST EDITION)**

A factory installed junction box is located on the lower right hand side of the firebox. Wiring must be fed to the junction box and attached to the receptacle that is provided. Remove the knockout in the installed junction box to accept wiring into the junction box. Install a UL listed cable clamp (not supplied) in the knockout hole. Leave approximately 6" of wire in the junction box for connection.

Attach black wire to one side of the receptacle and white wire to opposite side of receptacle. The ground wire should be attached to the green (neutral) screw.

Install the receptacle into the junction box. Attach cover plate.

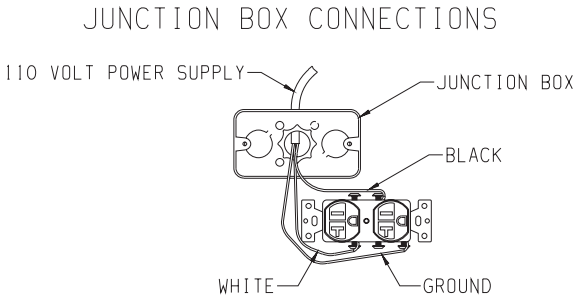


**Figure 33**

# MAINTENANCE

Keep the control compartment, logs and burner area surrounding the logs clean by vacuuming or brushing area at least twice a year.

THE LOGS CAN GET VERY HOT – HANDLE ONLY WHEN COOL.

Always turn off gas to the pilot before cleaning. For relighting, refer to lighting instructions located on the log set.

Never obstruct the flow of the combustion and ventilation air. Keep the front of the firebox clear of all obstacles and materials.

Screens must be closed during operation.

# PARTS LIST

| INDEX NO. | PART NUMBER | | | | | | DESCRIPTION |
|---|---|---|---|---|---|---|---|
| | VFP32FB2DL | VFP32FB2EL | VFP32FB2CL | VFP32FB2DF | VFP32FB2EF | VFP32FB2CF | |
| 1 | 17247 | 17247 | 17247 | 17247 | 17247 | 17247 | TOP STANDOFF |
| 2 | 17169 | 17169 | 17169 | N/A | N/A | N/A | UPPER LOUVER |
| 3 | 10554 | 10554 | 10554 | 10554 | 10554 | 10554 | FRAMING BRACKET |
| 4 | 17170 | 17170 | 17170 | N/A | N/A | N/A | LOWER LOUVER |
| 5 | 17162 | 17162 | 17162 | 17162 | 17162 | 17162 | JUNCTION BOX ASSEMBLY |
| 6 | R3492 | R3492 | R3492 | R3492 | R3492 | R3492 | Receptacle |
| 7 | R3491 | R3491 | R3491 | R3491 | R3491 | R3491 | COVER, JUNCTION BOX |
| 8 | 19945 | 19945 | 20448 | 19945 | 19945 | 20448 | BRACKET, TOP BRICK RETAINER |
| 9 | 19401 | 19401 | 19401 | 19401 | 19401 | 19401 | BRACKET, BOTTOM BRICK RETAINER |
| 10 | R8666 | R9419 | R8226 | R8666 | R9419 | R8226 | BRICK PANEL RIGHT |
| 11 | | | | | | | BRICK PANEL BACK |
| 12 | | | | | | | BRICK PANEL LEFT |
| 13 | 20020 | 20020 | 20020 | 20020 | 20020 | 20020 | HOOD |
| 14 | R7051 | R7051 | R7051 | R7051 | R7051 | R7051 | ROD, SCREEN |
| 15 | R8212 | R8212 | R8212 | R8212 | R8212 | R8212 | SCREEN CURTAIN |
| 16 | R8727 | R8727 | R8727 | R8727 | R8727 | R8727 | HOLE PLUG |
| 17 | 19990 | 19990 | 19990 | 19990 | 19990 | 19990 | BLOWER COVER PLATE |
| 18 | R9292 | R9292 | - | R9292 | R9292 | - | HEARTH LEDGE, RIGHT |
| 19 | R9293 | R9293 | - | R9293 | R9293 | - | HEARTH LEDGE, LEFT |
| 20 | R9294 | R9294 | - | R9294 | R9294 | - | HEARTH LEDGE, CENTER |
| 21 | 23004 | 23004 | - | 23004 | 23004 | - | RETAINER, HEARTH |

| INDEX NO. | PART NUMBER | | | | | | DESCRIPTION |
|---|---|---|---|---|---|---|---|
| | VFP36FB2DL | VFP36FB2EL | VFP36FB2CL | VFP36FB2DF | VFP36FB2EF | VFP36FB2CF | |
| 1 | 17247 | 17247 | 17247 | 17247 | 17247 | 17247 | TOP STANDOFF |
| 2 | 18807 | 18807 | 18807 | N/A | N/A | N/A | UPPER LOUVER |
| 3 | 10554 | 10554 | 10554 | 10554 | 10554 | 10554 | FRAMING BRACKET |
| 4 | 18808 | 18808 | 18808 | N/A | N/A | N/A | LOWER LOUVER |
| 5 | 17162 | 17162 | 17162 | 17162 | 17162 | 17162 | JUNCTION BOX ASSEMBLY |
| 6 | R3492 | R3492 | R3492 | R3492 | R3492 | R3492 | Receptacle |
| 7 | R3491 | R3491 | R3491 | R3491 | R3491 | R3491 | COVER, JUNCTION BOX |
| 8 | 19945 | 19945 | 20448 | 19945 | 19945 | 20448 | BRACKET, TOP BRICK RETAINER |
| 9 | 19401 | 19401 | 19401 | 19401 | 19401 | 19401 | BRACKET, BOTTOM BRICK RETAINER |
| 10 | R8669 | R9420 | R8228 | R8669 | R9420 | R8228 | BRICK PANEL RIGHT |
| 11 | | | | | | | BRICK PANEL BACK |
| 12 | | | | | | | BRICK PANEL LEFT |
| 13 | 20145 | 20145 | 20145 | 20145 | 20145 | 20145 | HOOD |
| 14 | R7052 | R7052 | R7052 | R7052 | R7052 | R7052 | ROD, SCREEN |
| 15 | R8201 | R8201 | R8201 | R8201 | R8201 | R8201 | SCREEN CURTAIN |
| 16 | R8727 | R8727 | R8727 | R8727 | R8727 | R8727 | HOLE PLUG |
| 17 | 19990 | 19990 | 19990 | 19990 | 19990 | 19990 | BLOWER COVER PLATE |
| 18 | R9292 | R9292 | - | R9292 | R9292 | - | HEARTH LEDGE, RIGHT |
| 19 | R9293 | R9293 | - | R9293 | R9293 | - | HEARTH LEDGE, LEFT |
| 20 | R9295 | R9295 | - | R9295 | R9295 | - | HEARTH LEDGE, CENTER |
| 21 | 23004 | 23004 | - | 23004 | 23004 | - | RETAINER, HEARTH |

# PARTS LIST

| INDEX NO. | PART NUMBER | | | | | | DESCRIPTION |
|---|---|---|---|---|---|---|---|
| | VFP42FB2DL | VFP42FB2EL | VFP42FB2CL | VFP42FB2DF | VFP42FB2EF | VFP42FB2CF | |
| 1 | 17247 | 17247 | 17247 | 17247 | 17247 | 17247 | TOP STANDOFF |
| 2 | 17187 | 17187 | 17187 | N/A | N/A | N/A | UPPER LOUVER |
| 3 | 10554 | 10554 | 10554 | 10554 | 10554 | 10554 | FRAMING BRACKET |
| 4 | 17188 | 17188 | 17188 | N/A | N/A | N/A | LOWER LOUVER |
| 5 | 17162 | 17162 | 17162 | 17162 | 17162 | 17162 | JUNCTION BOX ASSEMBLY |
| 6 | R3492 | R3492 | R3492 | R3492 | R3492 | R3492 | Receptacle |
| 7 | R3491 | R3491 | R3491 | R3491 | R3491 | R3491 | COVER, JUNCTION BOX |
| 8 | 19945 | 19945 | 20448 | 19945 | 19945 | 20448 | BRACKET, TOP BRICK RETAINER |
| 9 | 19401 | 19401 | 19401 | 19401 | 19401 | 19401 | BRACKET, BOTTOM BRICK RETAINER |
| 10 | R8672 | R9421 | R8285 | R8672 | R9421 | R8285 | BRICK PANEL RIGHT |
| 11 | | | | | | | BRICK PANEL BACK |
| 12 | | | | | | | BRICK PANEL LEFT |
| 13 | 19984 | 19984 | 19984 | 19984 | 19984 | 19984 | HOOD |
| 14 | R7053 | R7053 | R7053 | R7053 | R7053 | R7053 | ROD, SCREEN |
| 15 | R8201 | R8201 | R8201 | R8201 | R8201 | R8201 | SCREEN CURTAIN |
| 16 | R8727 | R8727 | R8727 | R8727 | R8727 | R8727 | HOLE PLUG |
| 17 | 19990 | 19990 | 19990 | 19990 | 19990 | 19990 | BLOWER COVER PLATE |
| 18 | R9292 | R9292 | - | R9292 | R9292 | - | HEARTH LEDGE, RIGHT |
| 19 | R9293 | R9293 | - | R9293 | R9293 | - | HEARTH LEDGE, LEFT |
| 20 | R9296 | R9296 | - | R9296 | R9296 | - | HEARTH LEDGE, RIGHT |
| 21 | 23004 | 23004 | - | 23004 | 23004 | - | RETAINER, HEARTH |

# PARTS VIEW

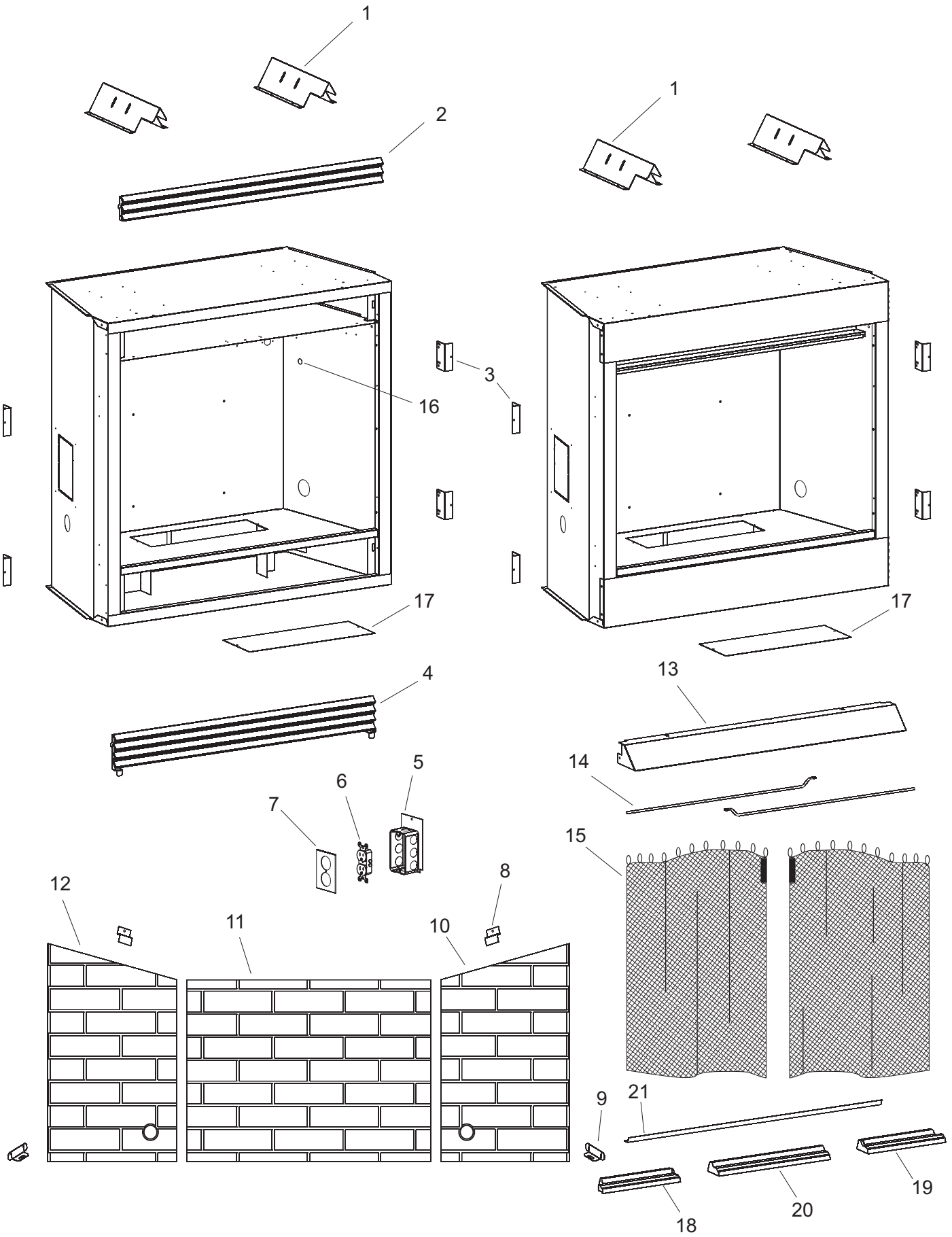

# ACCESSORIES

| Accessory | Description | Model Numbers |
|---|---|---|
| **Fan Kit** | Designed to provide forced air flow. | FBB5 |
| **Variable Speed Control Kit** | Wall mounted variable speed control for use with FBB5 blower | SCV-1 |
| **Fresh Air Kit** | Deluxe and Premium Fireboxes | BVA-1 |
| **Frame Kits** | Standard 3-Piece Frame Kits<br>Black, Brass, Stainless Steel, or Hammered Pewter<br><br>Extruded Aluminum Frame Kits<br>Black, Brass, Stainless Steel, or Hammered Pewter | Contact dealer for all available optional frame kits |
| Standard Hood | Brass hood = BR<br><br>Stainless Steel = SS<br><br>Hammered Pewter = HP | Contact dealer for all available optional hood accessories |

# ACCESSORIES (continued)

| | | |
|---|---|---|
| **Extended 4" Hoods** 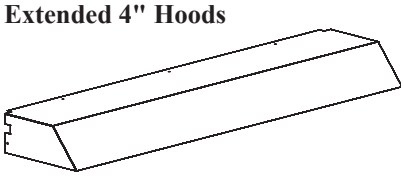 | Extended hoods that extend out 2" farther than the standard hoods, to accommodate thicker surround materials.<br><br>Available as optional kits in Black, Brass, Hammered Pewter, and Stainless Steel finishes. | Contact dealer for all available optional hood accessories |
| **Louvers** 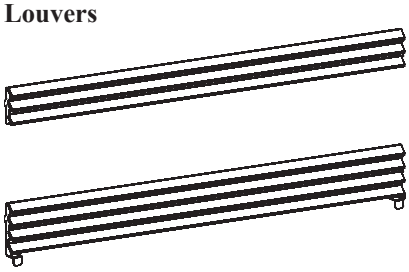 | Styles include Slat, Mission, Arch, and Leaf Patterns.<br><br>Available as optional kits in Black, Brass, Hammered Pewter, and Stainless Steel finishes. | Contact dealer for all available optional louver accessories |
| **Bottom Trim Strip** 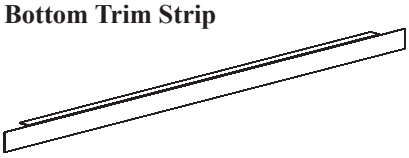 | Available as optional kits in Black, Brass, Hammered Pewter, and Stainless Steel finishes. | Contact dealer for all available optional trim accessories |
| **Decorative Door Kits** | Available as optional kits in Black, Brass, Hammered Pewter, and Stainless Steel finishes. | Contact dealer for all available optional frame kit accessories |
| **Decorative Frame Kits** | Available as optional kits in Black, Brass, Hammered Pewter, and Stainless Steel finishes. | Contact dealer for all available optional decorative door kit accessories |

# MASTER PARTS DISTRIBUTOR LIST

To Order Parts Under Warranty, please contact your local Empire dealer. See the dealer locator at www.empirecomfort.com. To provide warranty service, your dealer will need your name and address, purchase date and serial number, and the nature of the problem with the unit.

To Order Parts After the Warranty Period, please contact your dealer or one of the Master Parts Distributors listed below. This list changes from time to time. For the current list, please click on the Master Parts button at www.empirecomfort.com.

Please note: Master Parts Distributors are independent businesses that stock the most commonly ordered Original Equipment repair parts for Heaters, Grills, and Fireplaces manufactured by Empire Comfort Systems Inc.

**Star-Fire Distributors**
1355 Evans Avenue
Akron, OH 44305

**Phone:** 330-630-2794
**Toll Free:** 800-875-6220
**Fax:** 330-633-8701
**Parts: Heater & Hearth and Grills**

**Dey Distributing**
1401 Willow Lake Boulevard
Vadnais Heights, MN 55101

**Phone:** 651-490-9191
**Toll Free:** 800-397-1339
**Website:** www.deydistributing.com
**Parts: Heater & Hearth**

**East Coast Energy Products**
10 East Route 36
West Long Branch, NJ 07764

**Phone:** 732-870-8809
**Toll Free:** 800-755-8809
**Fax:** 732-870-8811
**Website:** www.eastcoastenergy.com
**Parts: Heater & Hearth and Grills**

**Victor Division of F. W. Webb Company**
200 Locust Street
Hartford, CT 06114

**Phone:** 860-722-2433
**Toll Free:** 800-243-9360
**Fax:** 860-293-0479
**Toll Free Fax:** 800-274-2004
**Websites:** www.fwwebb.com & www.victormfg.com
**Parts: Heater & Hearth and Grills**

# HOW TO ORDER REPAIR PARTS

**Parts Not Under Warranty**

Parts can be ordered through your Service Person, Dealer, or a Master Parts Distributor. See this page for the Master Parts Distributors list. For best results, the **service person or dealer** should order parts through the distributor. Parts can be shipped directly to the **service person/dealer**.

**Warranty Parts**

Warranty parts will need a proof of purchase and can be ordered by your Service Person or Dealer. Proof of purchase is **required** for warranty parts.

All parts listed in the Parts List have a Part Number. When ordering parts, first obtain the Model Number and Serial Number from the name plate on your equipment. Then determine the Part Number (**not** the Index Number) and the Description of each part from the following illustration and part list. Be sure to give all this information . . .

Appliance Model Number _____ Part Description _____

Appliance Serial Number _____ Part Number _____

Type of Gas (Propane or Natural) _____

Do not order bolts, screws, washers or nuts. They are standard hardware items and can be purchased at any local hardware store.

Shipments contingent upon strikes, fires and all causes beyond our control.

# SERVICE NOTES

Empire Comfort Systems Inc.
918 Freeburg Ave. Belleville, IL  62220

If you have a general question about our products, please e-mail us at info@empirecomfort.com.
If you have a service or repair question, please contact your dealer.

**www.empirecomfort.com**