This Owner's Manual is provided and hosted by Appliance Factory Parts.

Appliance Factory Parts
Experts in BBQ, Humidifier, & Appliance Parts
1-800-955-7075

MAJESTIC VFR36C Owner's Manual

Shop genuine replacement parts for MAJESTIC VFR36C

Find Your MAJESTIC Fireplace Parts - Select From 585 Models

-------- Manual continues below --------

MAJESTIC

Vent-free Fireboxes

Models: VF, VFR

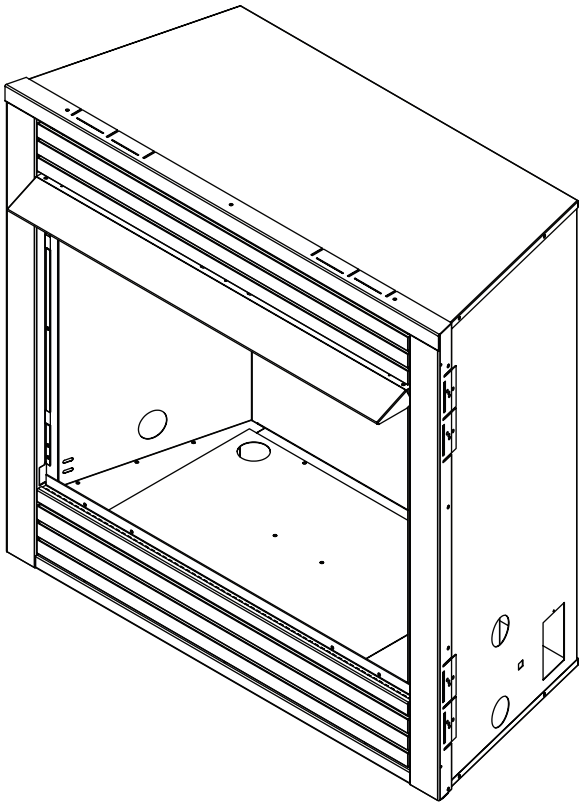

WARNINGS

If the information in this manual is not followed exactly, a fire or explosion may result causing property damage, personal injury or loss of life.

- **Do not store or use gasoline or other flammable vapors and liquids in the vicinity of this or any other appliance.**
- **WHAT TO DO IF YOU SMELL GAS**
  - **Do not try to light any appliance.**
  - **Do not touch any electrical switch; do not use any phone in your building.**
  - **Immediately call your gas supplier from a neighbor's phone. Follow the gas supplier's instructions.**
  - **If you cannot reach your gas supplier, call the fire department.**
- **Installation and service must be performed by a qualified installer, service agency or the gas supplier.**

Installation and
Operating Instructions

For use with a listed gas-fired unvented decorative room heater not to exceed 40,000 BTU/hr. *Do Not Build a Wood Fire.*

Carefully review the instructions supplied with the decorative type unvented room heater for the minimum fireplace size requirement.

DO NOT INSTALL AN APPLIANCE IN THIS FIREBOX UNLESS THIS FIREBOX MEETS THE MINIMUM DIMENSIONS REQUIRED FOR THE INSTALLATION.

DESIGN CERTIFIED ®

MADE IN U.S.A.

INSTALLER: Leave this manual with the appliance.
CONSUMER: Retain this manual for future reference.

71D0531 1/11 Rev. 8

PLEASE READ THE INSTALLATION & OPERATING INSTRUCTIONS BEFORE USING APPLIANCE.

Thank you and congratulations on your purchase of a Majestic vent free firebox.

IMPORTANT: Read all instructions and warnings carefully before starting installation. Failure to follow these instructions may result in a possible fire hazard and will void the warranty.

Important Safety Information 3
General Installation Information 5
Before You Start.....5
What You Will Need for Installation.....5
Firebox and Framing Dimensions.....6
Hearth Dimensions.....7
Firebox Location.....7
Minimum Clearances.....8
Firebox Framing 9
Fireplace Installation.....10
Canopy Installation 10
Gas Line Installation 11
Combustion Air.....12
Optional AK-4 Outside Air Kit.....13
Model 403 Duct Connector 14
Optional Equipment 15
Replacement Parts 16
Warranty 19

INSTALLER

Please leave these instructions with the appliance.

OWNER

Please retain these instructions for future reference.

WARNING

- **Any change to this heater or its controls can be dangerous.**
- **Improper installation or use of the heater can cause serious injury or death from fire, burns, explosion or carbon monoxide poisoning.**
- **Do not allow fans to blow directly into the fireplace. Avoid any drafts that alter burner flame patterns.**
- **Do not use a blower insert, heat exchanger insert or other accessory, not approved for use with this heater where applicable.**

1. Due to high temperatures, the firebox should be located out of traffic and away from furniture and draperies.
2. Children and adults should be alerted to the hazard of high surface temperature and should stay away to avoid burns or clothing ignition.
3. Young children should be carefully supervised when they are in the same room with the firebox.
4. Do not place clothing or other flammable material near the fireplace when the firebox is in use.
5. Any safety screen or guard removed for servicing, must be replaced prior to operating a heater within the firebox.
6. Installation and repair should be done by a qualified service person.
7. To prevent malfunction and/or sooting, an unvented gas heater/firebox should be cleaned at least annually by a professional service person. More frequent cleaning may be required due to excessive lint from carpeting, etc. It is imperative that control compartments, burners and circulating air passageways be kept clean.
8. **CARBON MONOXIDE POISONING:** Early signs of carbon monoxide poisoning are similar to the flu with headaches, dizziness and/or nausea. If you have these signs, obtain fresh air immediately. Have the heater serviced as it may not be operating properly.
9. The installation must conform with local codes or, in the absence of local codes, with the National Fuel Gas Code, ANSI Z223.I/NFPA54.
10. This unit complies with ANSI Z21.91 ventless firebox enclosures for gas-fired unvented decorative room heaters.
11. Do not install the unvented heater in a bathroom.
12. Do not install the unvented heater in a bedroom unless the maximum input rating is equal to or less than 10,000 Btu/hr.
13. Correct installation of the ceramic fiber logs, proper location of the heater, and annual cleaning are necessary to avoid potential problems with sooting. Sooting, resulting from improper installation or operation, can settle on surfaces outside the fireplace. See log placement instructions for proper installation.
14. Avoid any drafts that alter burner flame patterns. Do not allow fans to blow directly into fireplace. Do not place a blower inside burn area of firebox. Ceiling fans may create drafts that alter burner flame patterns. Sooting and improper burning will occur.
15. **CAUTION:** Candles, incense, oil lamps, etc. produce combustion byproducts including soot. Vent-free appliances will not filter or clean soot produced by these types of products. In addition, the smoke and/or aromatics (scents) may be reburnt in the vent-free appliance which can produce odors. It is recommended to minimize the use of candles, incense, etc. while the vent-free appliance is in operation.
16. An unvented gas-fired heater uses air (oxygen) from the room in which it is installed. Provisions for adequate combustion and ventilation air must be provided. See installation guidelines.
17. Keep room area clear and free from combustible materials, gasoline and other flammable vapors and liquids.
18. Unvented gas heaters are a supplemental zone heater. They are not intended to be a primary heating appliance.
19. Unvented gas heaters emit moisture into the living area. In most homes of average construction, this does not pose a problem. In houses of extremely tight construction, additional mechanical ventilation is recommended.
20. During manufacturing, fabricating and shipping, various components of this appliance are treated with certain oils, films or bonding agents. These chemicals are not harmful but may produce annoying smoke and smells as they are burned off during the initial operation of the appliance; possibly causing headaches, or eye or lung irritation. This is a normal and temporary occurrence.

Continued on page 4

Continued from page 3

The initial break-in operation should last two to three hours with the burner at the highest setting. Provide maximum ventilation by opening windows or doors to allow odors to dissipate. Any odors remaining after this initial break-in period will be slight and will disappear with continued use.

21. Input ratings are shown in BTU per hour and are for elevations up to 2,000 feet. For elevations above 2,000 feet, input ratings should be reduced 4 percent for each 1,000 feet above sea level. Refer to the National Fuel Gas Code.
22. The appliance and its appliance main gas valve must be disconnected from the gas supply piping system during any pressure testing of that system at test pressures in excess of 1/2 psig (3.5 kPa).
23. The appliance must be isolated from the gas supply piping system by closing its equipment shutoff valve during any pressure testing of the gas supply piping system at test pressures equal to or less than 1/2 psig (3.5 kPa).
24. Do not use this room heater if any part has been under water. Immediately call a qualified service technician to inspect the room heater and to replace any part of the control system and any gas control which has been under water.
25. Never burn solid fuels in a fireplace where a unvented room heater is installed.
26. Always have a fireplace screen in place when the appliance is in operation, and unless other provisions for combustion air are provided, the screen shall have an opening(s) for induction of combustion air.
27. Do not fill spaces around the firebox with insulation or other materials. These spaces must be maintained to prevent the firebox from coming in contact with combustible materials.

WARNING

Do not attempt to burn solid wood fuels, vented gas log sets, or any other combustible in this unvented firebox. Also, do not install a vent-free gas log set in this firebox if the minimum clearance and height requirements of the log set are too large for the firebox.

NOTICE

Illustrations shown in this manual reflect "typical" installations with nominal dimensions and are for design and framing reference only. Actual installations may vary due to individual design preferences. However, always maintain minimum clearances to combustible materials and do not violate any specific installation requirements.

NATIONAL FIREPLACE INSTITUTE® NFI CERTIFIED www.nficertified.org

We recommend that our gas hearth products be installed and serviced by professionals who are certified in the U.S. by the National Fireplace Institute® (NFI) as NFI Gas Specialists.

The VF-TB and VF-R Series are vent-free fireboxes. They feature a self contained heat-circulating system. These units also feature a 2-in1, flexible-face system, sold as an accessory, that converts the circulating system into a radiant system in seconds.

This installation manual will enable you to obtain a safe, efficient and dependable installation of your vent-free fireplace system.

Do not alter or modify the firebox or its components under any circumstances. Any modification or alteration of the firebox system, including but not limited to the firebox and accessories, may void the warranty, listings and approvals of this system and could result in an unsafe and potentially dangerous installation.

BEFORE YOU START

Carefully inspect the contents for shipping damage. If any parts are missing or damaged, immediately inform the dealer from whom you purchased the appliance. Do not attempt to install any part of the appliance unless you have all the parts in good condition.

MAKE SURE YOU HAVE RECEIVED ALL PARTS

Check your packing list to verify that all listed parts have been received. You should have the following:

1. Vent-Free Gas Firebox
2. Canopy
3. Installation and Operating Instructions
4. Five (5) sheet metal screws for canopy

WHAT YOU WILL NEED FOR INSTALLATION

TOOLS and BUILDING SUPPLIES

- Phillips screwdriver
- Framing materials
- Saw and / or saber saw
- Level
- Measuring tape
- Square
- Hammer
- Tee joint
- Pipe wrench
- Pliers
- Electric drill and bits
- Fireplace surround materials *(noncombustible)*
- Caulking material *(noncombustible)*
- Wall finishing materials
- Piping complying with local codes
- Pipe sealant approved for use with propane/L.P.G. *(resistant to sulfur compounds)*

Refer to the installation instructions provided with the log sets for items required for log set installation.

In planning the installation for the appliance it is necessary to determine where the unit is to be installed and whether optional accessories are desired. Gas supply piping should also be planned. The following steps represent the normal sequence of installation. Each installation is unique, however, and might require a different sequence.

1. Position firebox prior to framing or into prepared framing.
2. Field wire main power supply to models with fan kit. (Electrical connections should only be performed by an experienced, licensed /certified tradesman).
3. Plumb gas line. (Gas connections should only be performed by an experienced, licensed/certified tradesman).
4. Install vent-free gas log heater per the instructions provided with the vent-free gas log heater.
5. Complete finish wall material, surround and optional hearth extension to your individual taste.

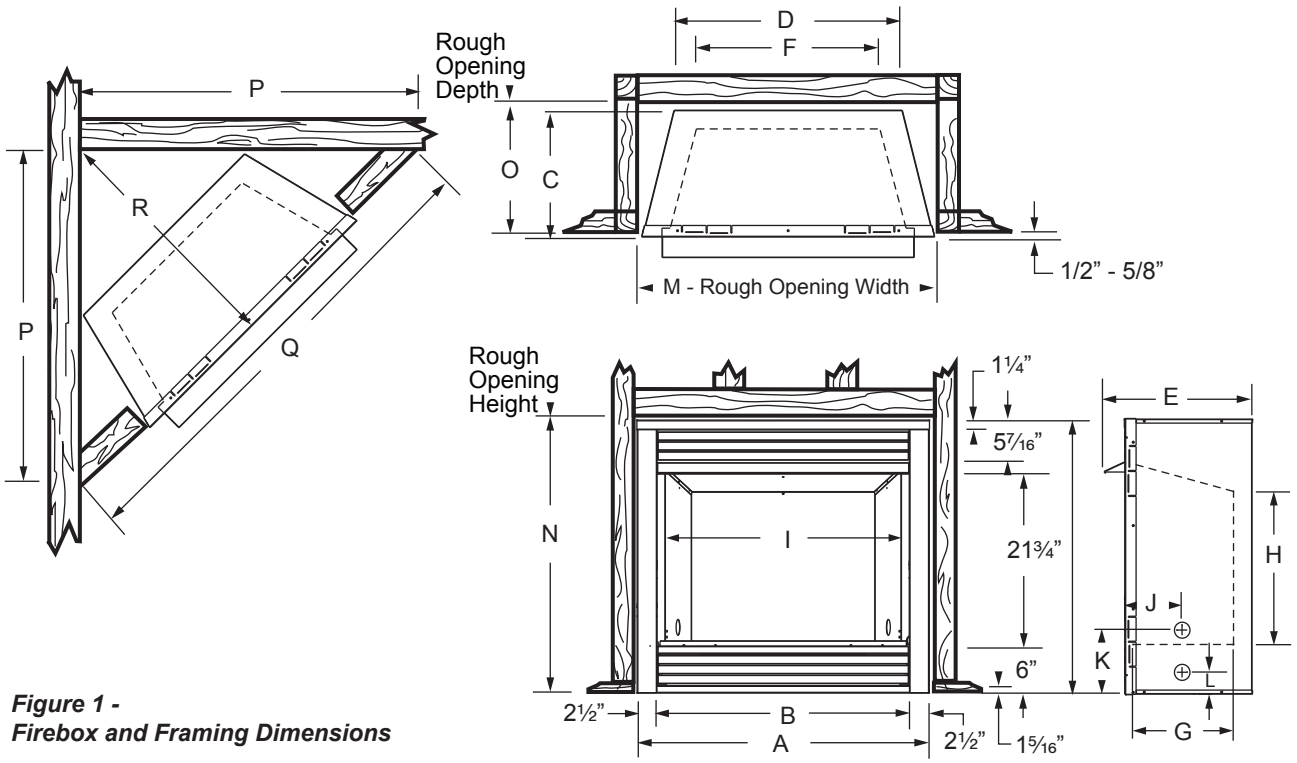

Figure 1 - Firebox and Framing Dimensions

Ref.	VF/VFR32C	VF/VFR36C	VF/VFR42C
A	37"	41"	47"
B	32"	36"	42"
C	16"	18"	18"
D	29"	32"	38"
E	18⅝"	20⅝"	20⅝"
F	23⅜"	27⅜"	33⅜"
G	13¼"	15¾"	15¾"
H	18"	17⅝"	17⅝"
I	29⅞"	34"	40"
J	7⅛"	9¾"	9¾"
K	8"	8¼"	8¼"
L	2¾"	2¼"	2¼"
M	37¼"	41¼"	47¼"
N	35"	35"	35"
O	15½"	17½"	17½"
P	43¾"	48¾"	53"
Q	61¾"	68⅞"	74⅞"
R	30⅞"	34½"	37½"

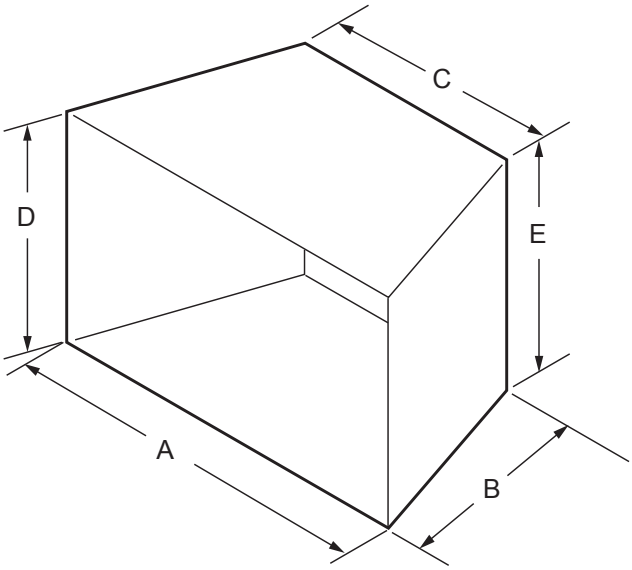

Ref.	VF/VFR32C	VF/VFR36C	VF/VFR42C
A	29⅞"	34"	40"
B	13¼"	15¾"	15¾"
C	23⅜"	27⅜"	33⅜"
D	21⅞"	21⅞"	21⅞"
E	18"	17⅝"	17⅝"

Figure 2 -
Minimum Hearth Dimensions

LOCATION OF FIREBOX

Carefully select the best location for installation of your vent-free firebox. The following factors should be taken into consideration:

- Clearance to side wall, ceiling, woodwork and windows. See “Clearances/Height Requirements on page 8. Minimum clearances to combustibles **must be maintained.**
- Location must not be affected by drafts caused by kitchen exhaust fans, ceiling fans, return air registers for forced air furnaces / air conditioners, windows or doors.
- Installation must provide adequate ventilation and combustion air.
- **DO NOT INSTALL THIS FIREBOX IN A BEDROOM OR BATHROOM.**
- Location should be out of high traffic or windy or drafty areas.
- **DO NOT INSTALL WHERE CURTAINS, FURNITURE, CLOTHING OR OTHER FLAMMABLE OBJECTS ARE LESS THAN 42" FROM FRONT OF HEATER.**
- Never obstruct the front opening of the vent-free firebox or restrict the flow of combustion and ventilation air.
- Minimize modifications to existing construction. Refer to *Figure 3* below for location suggestions.
- Do not install in the vicinity where gasoline or other flammable liquids may be stored. The vent-free firebox must be kept clear and free from these combustible materials.

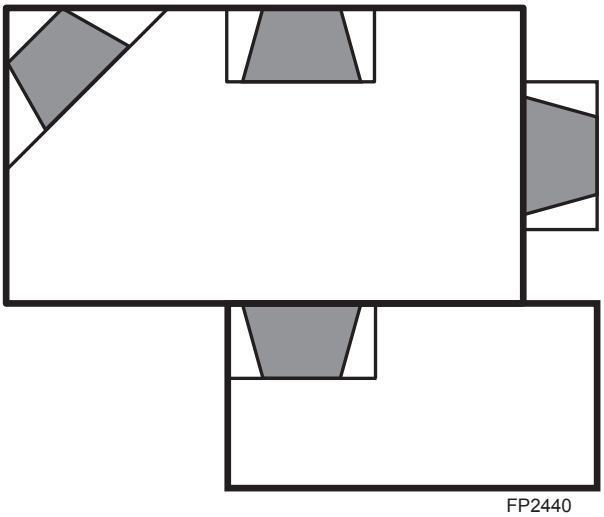

Figure 3 -
Location of Firebox

Ensure that minimum clearances shown in Figures 4 through 8 are maintained. Left and right clearances are determined when facing the front of the firebox.

Follow these instructions carefully to ensure safe installation. Failure to follow these requirements may create a fire hazard.

1. **Sidewall clearances:** The clearance from the inside of the appliance to any combustible wall should not be less than 9". *Figure 4*
2. **Ceiling clearance:** The ceiling must be at least 42" from the top of the firebox opening. *Figure 4*
3. **Back wall clearance:** The appliance may be placed against a combustible back wall.

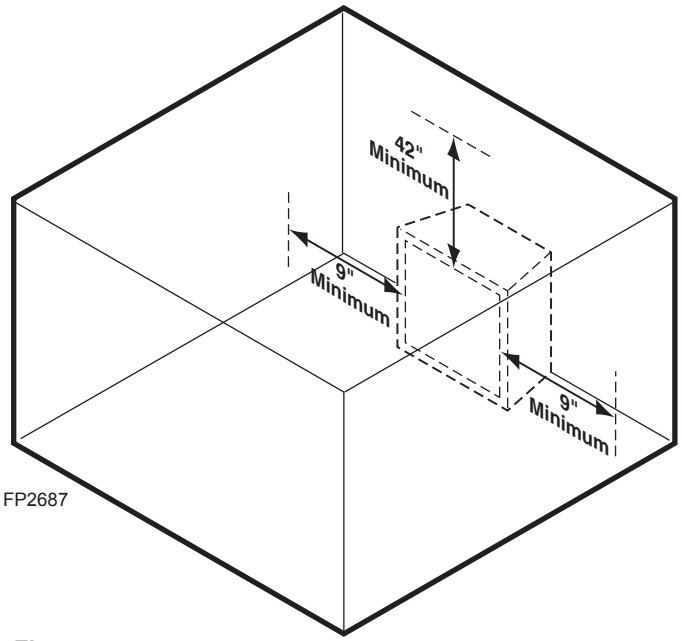

Figure 4 - Clearance and Height Requirements

4. **Mantel clearances:** The canopy supplied with the unit must be installed. If a combustible mantel is installed, it must meet the clearance requirements as shown in *Figure 5*. However, if lower mantel height is desired, refer to Page 14, *Figure 6*.

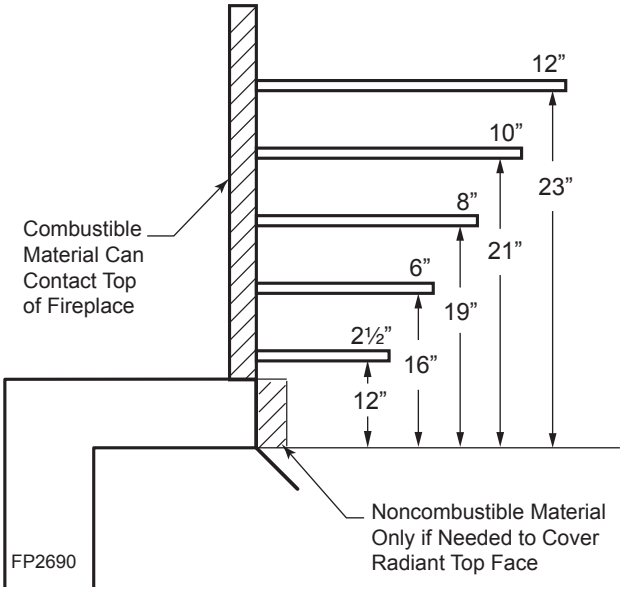

Figure 5 - Mantel Clearances

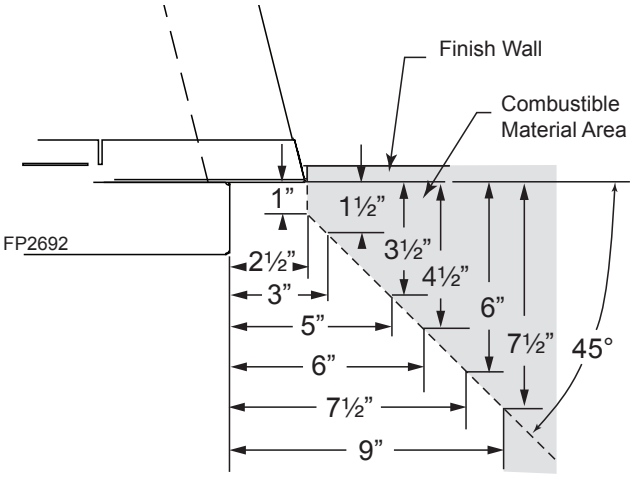

Figure 5a - Mantel Leg Clearance

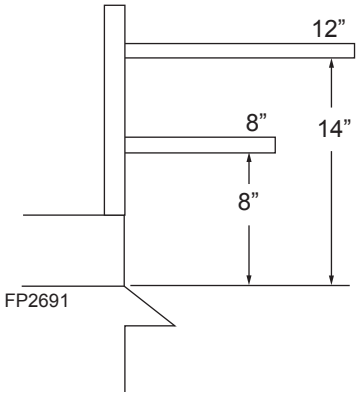

Figure 6 - Mantel Heights for Wide Profile Canopy

5. **Floor clearance:** This inner chamber firebox floor must be installed at least 5" above any combustible flooring material, such as carpeting or asphalt tile, which is closer than 14" to the base of the firebox. *Figure 7*

   OR

   The inner chamber firebox floor may be installed nearer to the floor if a minimum of 14" of noncombustible ma terial such as slate or marble is installed between the base of the firebox and the combustible flooring. *Figure 8*

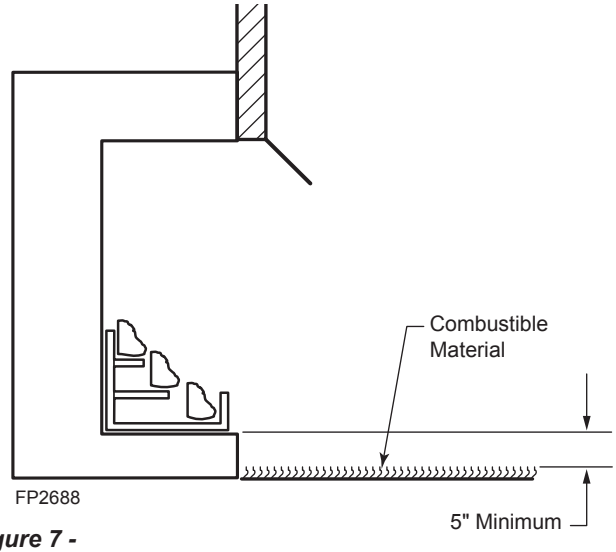

Figure 7 - Minimum Clearance Above Combustible Flooring

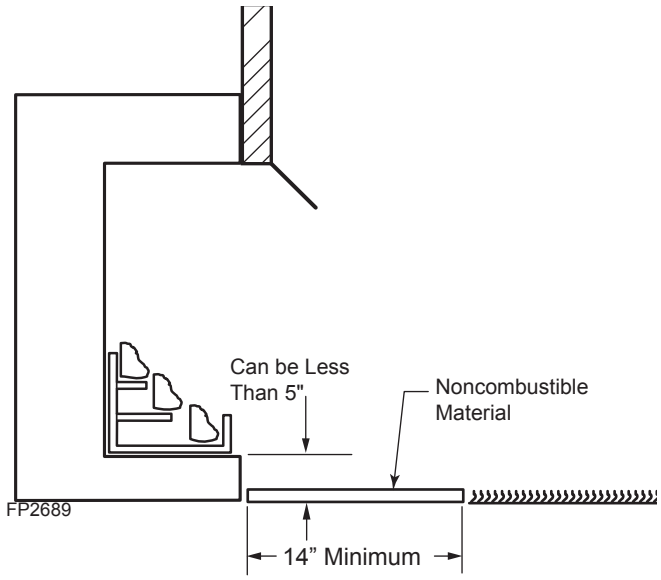

Figure 8 - Minimum Clearance above Combustible Flooring with Noncombustible Material Installed at Base of Fireplace

FIREBOX FRAMING

Firebox framing can be built before or after the appliance is set in place. Construct firebox framing following *Figure 1* for your specific installation requirements. *See Figure 1 on Page 6* for firebox dimensions. The framing headers may rest on the top of the firebox.

The firebox may be installed directly on a combustible floor or raised on a platform of an appropriate height. When the firebox is installed directly on carpeting, tile, or other combustible material, other than wood flooring, the firebox shall be installed on a metal or wood panel extending the full width and depth of the enclosure.

The classification "noncombustible material" includes, but is not limited to: stone, brick, and mortar. Noncombustibles are safe to overlay the black-painted metal face, including radiant plates, and do not pose a fire hazard. Any noncombustible finish material must not extend past or interfere with the fireplace opening.

The classification "combustible material" incudes, but is not limited to: plywood, drywall, and particle board. Combustible materials may contact the sides, bottom, or back of the firebox. Do not overlay the black painted face with combustible materials.

WARNING **Do not fill spaces around firebox with insulation or other materials. This could cause a fire.**

WARNING **The fireplace must be installed giving full consideration to the clearance and height requirements identified in this manual.**

1. Bend out the nailing flanges located on each side of the firebox.
2. Slide the firebox into prepared framing or position firebox in its final position and frame later.
3. Level the firebox by checking the top edge of the firebox. Shim if necessary.
4. Anchor firebox to the side framing members using 8d nails or other suitable fasteners. *Figure 9.*
5. The canopy must be installed for safe operation of the heater.

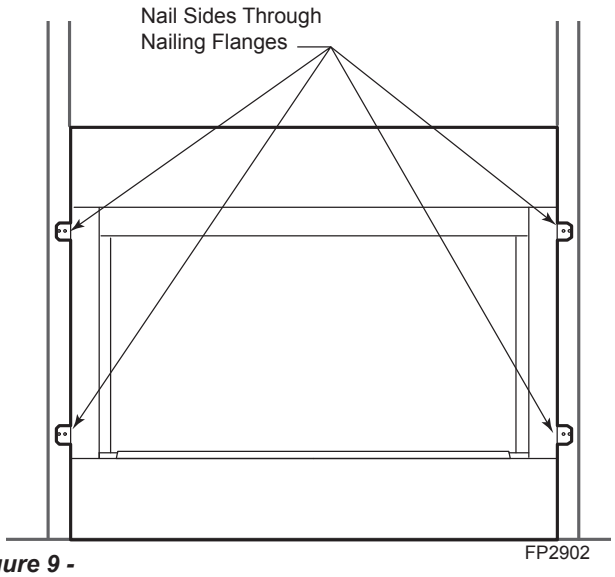

Figure 9 - Location of Nailing Flanges

INSTALLING CANOPY

A canopy is furnished with each firebox and MUST be installed for safe operation. *Figure 11*

1. Align the canopy with the holes in the top frame.
2. Secure the screws as shown.
3. Tighten side screws. Make sure the canopy is level and secure.

When finishing a custom cabinet, mantel, or other built-in enclosure, the opening size to accommodate the fireplace with trim installed is as follows:

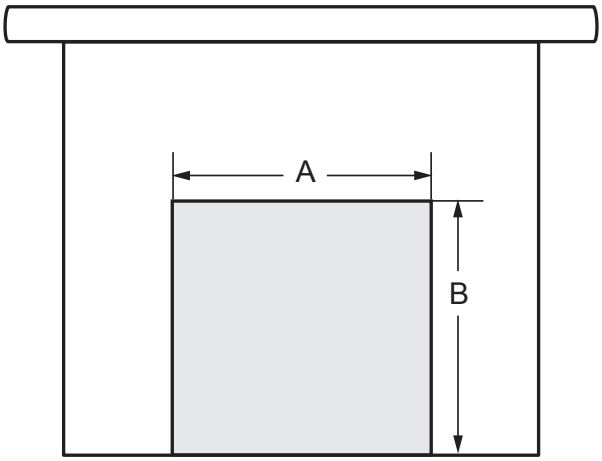

Figure 10 - Custom Cabinet

Ref.	VF/VFR32C w/Trim	VF/VFR36C w/Trim	VF/VFR42C w/Trim
A	37⅞"	41⅞"	47⅞"
B	35⅞"	35⅞"	35⅞"

WARNING **Close fireplace screen panel before operating a decorative type unvented room heater.**

WARNING **The firebox canopy must not be modified or replaced with a canopy that may be provided with the unvented decorative room heater.**

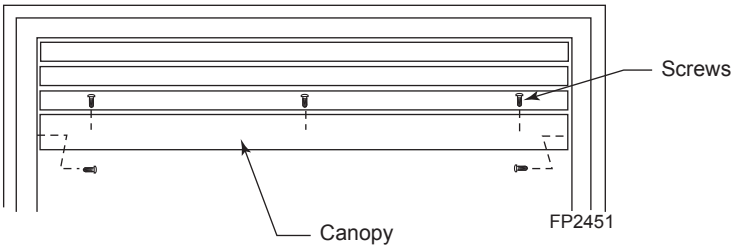

Figure 11 - Installing Canopy

WARNING

Plumbing connections should only be performed by a qualified, licensed plumber. Main gas supply must be off when plumbing gas line to fireplace or performing service.

Consult all local codes. All gas piping must be installed to comply with local codes, or in the absence of local codes, with the latest edition of the National Fuel Gas Code ANSI Z223.1/NFPA54.

Remove the baseplate for ease of gas line installation. Remove screws along the front edge of the baseplate and bottom center piece of the firebox and set aside. Lift baseplate and pull toward you. Replace baseplate prior to connecting gas line to heater. Consult heater installation and operating instructions for correct installation of the heater into the firebox.

The 1/2" gas line may enter either from the left side or right side of the firebox. Gas access holes are provided on both sides of the firebox.

A listed manual shutoff valve must be installed upstream of the appliance. A union tee and plugged 1/8" NPT pressure tapping point should be installed upstream of hte appliance.

IMPORTANT: Install main gas valve (equipment shutoff valve) in an accessible location. The main gas valve is for turning on or shutting off the gas to the fireplace.

A sediment trap may be upstream of the heater to prevent moisture and contaminants from passing through trap to the heater controls and burners. Failure to do so could prevent the heater from operating reliably. Consult applicable codes.

An external regulator must be used on all propane/L.P.G. heaters, in addition to the regulator fitted to the heater, to reduce the supply tank pressure to 13" w.c. (maximum). Any copper tubing used to supply propane / L.P.G. from the tank must be internally tinned.

NOTE: When connecting propane / L.P.G. vent-free room heaters, you must use pipe sealant resistant to propane / L.P.G.

IMPORTANT: Hold heater regulator with a wrench to prevent movement when connecting to inlet piping.

Check gas type: The gas supply must be the same as stated on the heater's rating plate. If the gas supply is different, DO NOT INSTALL THE HEATER. Contact your dealer for the correct model.

WARNING

Connecting directly to an unregulated propane / L.P.G. tank can cause an explosion.

WARNING

Do not connect directly to natural gas 1/2 PSI or 2 PSI systems. Always make sure natural gas pressure is regulated 10.5 w.c. (maximum before operating the unit).

After completing connection, test all gas joints from the gas meter to the gas heater regulator for leaks. Using soap and water solution or a gas sniffer. DO NOT USE AN OPEN FLAME.

COMBUSTION AIR

1. Locate combustion air assembly at an exterior location which is not likely to be accidentally blocked in any manner. Locate assembly a min. of 12" above the snow line to prevent blockage by snow accumulation.
2. Never mount the combustion air inlet assembly in a garage or storage area where combustible fumes such as gasoline might be drawn into the fireplace.
3. Combustion air can be drawn from the crawl space under a house when an adequate supply of air is provided by open ventilation.
4. **CAUTION: Do not take combustion air from attic space or garage space.**
5. Locate air supply inlet at least 3' away from any appliance vent terminal.
6. Avoid extremely long runs and numerous turns in the duct leading from the fireplace to the combustion air assembly. These conditions increase the resistance to the free flow of air through the duct. *Refer to Figures 12 through 15* for methods of installing the outside air for combustion assemblies.

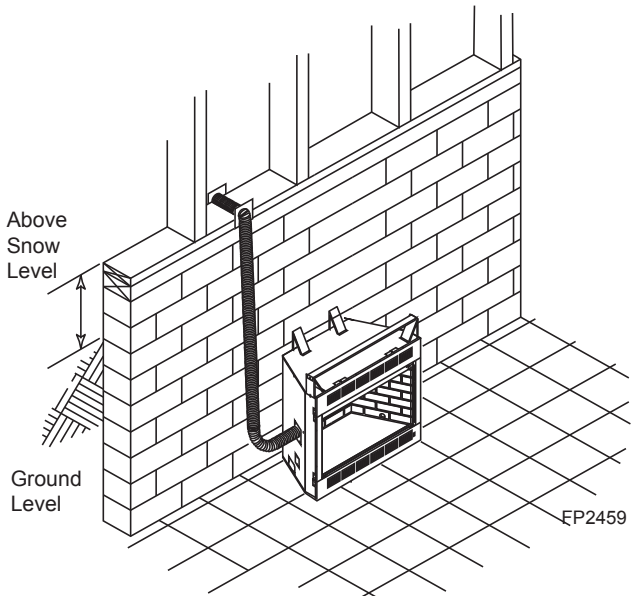

Figure 12 - Basement Installation

NOTE: Fireplace model in illustrations may not be representative of your appliance.

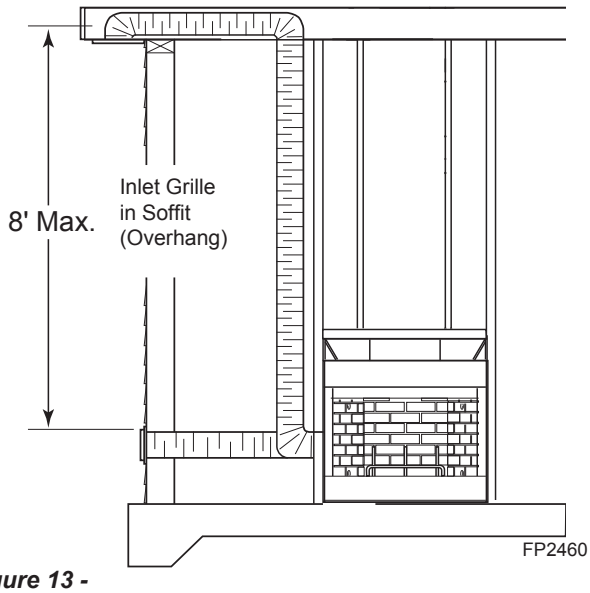

Figure 13 - Concrete Slab Installation (Optional Outside Air Runs)

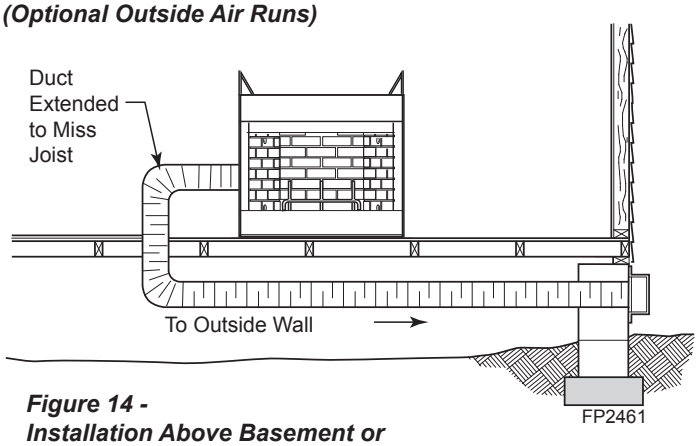

Figure 14 - Installation Above Basement or Crawl Space

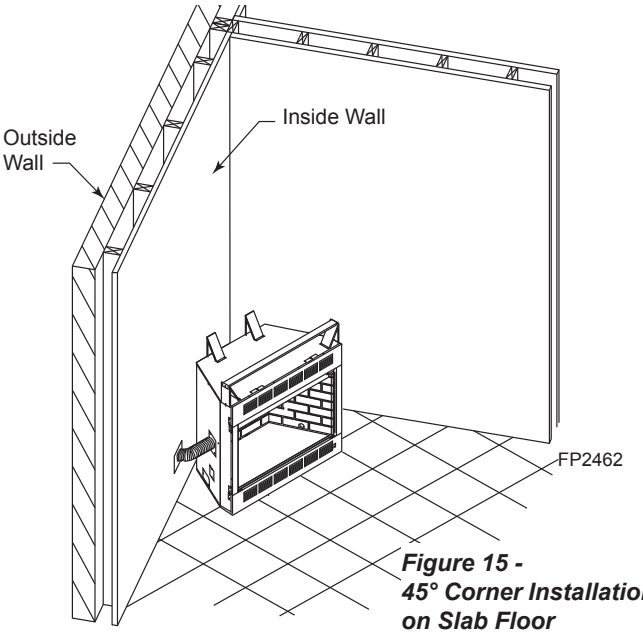

Figure 15 - 45° Corner Installation on Slab Floor

WARNING

DO NOT remove the cover if the outside air will not be connected.

The use of outside air for combustion is optional unless required by building codes. It is only necessary to supply outside combustion air to one side of the fireplace. Use the model AK4 combustion air kit.

MODEL AK-4 COMBUSTION AIR ASSEMBLY

1. Remove the cover plate from the 4" outlet opening location on the left or right outside of the fireplace.
2. Place the insulation ring between the AK-4 starting collar and fireplace wall.
3. Place the starting collar (4") into the hole on the side of fireplace. Fasten it in place with the four sheet metal screws provided. *Figures 16 and 17*

NOTE: The air starting collar extends through the fireplace outer wrap. When the air starting collar is securely attached, it will form a seal against the fireplace wall.

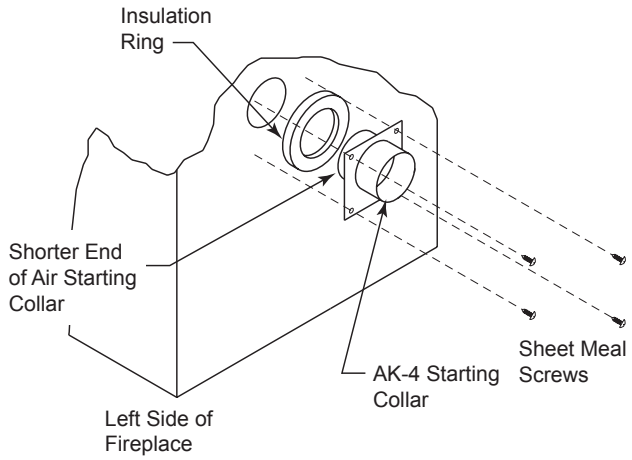

Figure 16 - Attach Outside Air Starting Collar and Insulation Ring to Left Side of Fireplace

WARNING

Use FP-4 U duct for maximum efficiency and safety. Do not use a combustible duct. Always use UL Listed Class 0 or 1 duct material.

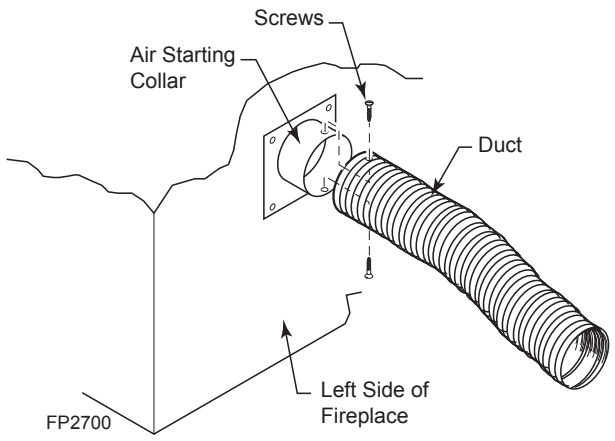

Figure 17 - Attach Outside Duct to Starting Collar

4. Attach outside duct to starting collar with duct clamp or screws. *Figure 17*
5. Cut a 6-inch diameter opening for model AK-4 in the outside wall covering where the outside vent is to be located. *Figure 18*
6. Select and cut a piece of duct long enough to attach to the fireplace and stick out at least 3" beyond the face of the wall to which the AK-4 inlet air vent will be attached. Cut duct with a standard pocket knife. *Figure 17*

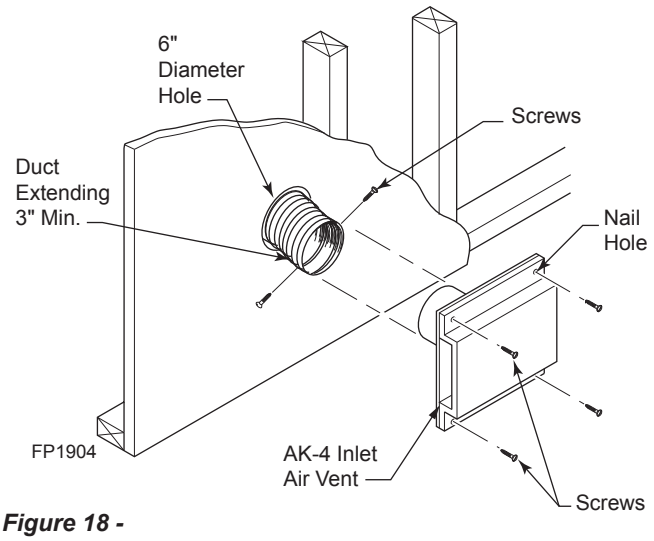

Figure 18 - Combustion Air Assembly for Model AK-4

7. If the duct is the insulated type, push the insulation back from one end of the duct approximately 2". *Figure 19*
8. Slip the exposed end of the duct over the starting collar on the fireplace.
9. Using the sheet metal screws provided, secure the duct end to the collar attached to the fireplace.
10. Nail or screw the combustion air assembly to the surface of the wall.

NOTE: If the wall covering is brick or stone, use appropriate masonry fasteners. If necessary, splice the duct. Use a model 403-duct connector to splice duct sections.

INSTALL MODEL 403 DUCT CONNECTOR

1. Push insulation back approximately 2" from the end of each duct.
2. Slip each duct over duct connector until an equal length of connector extends into each duct.
3. Place duct clamp over the end of each duct. Tighten duct clamp down snuggly.
4. Push insulation back into place and over duct clamp.

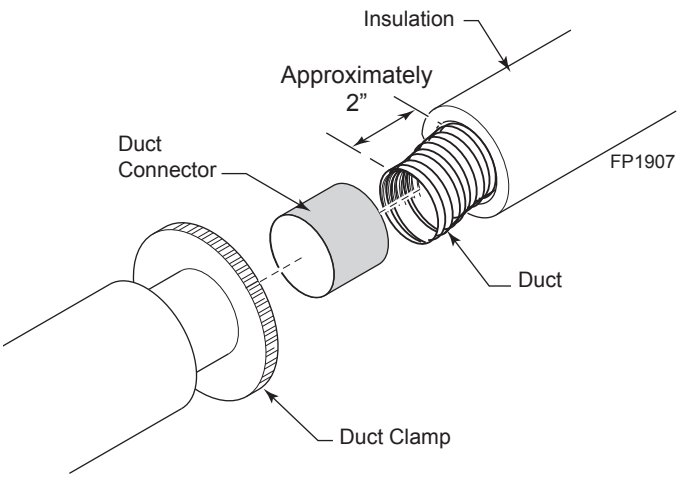

Figure 19 -
Install Duct Connector 403

FORCED AIR KIT *(BLOTMC)*

If you are installing the forced air kit on VF-TB or VF-R models, see the installation instructions provided with the kit for electrical wiring requirements, or the blower installation section. The firebox must be connected to main power supply at time of firebox installation. The blower must be installed prior to the installation of the vent-free heater. The electrical connections must be made before the firebox is framed and enclosed in the finished walls.

BRASS OR PEWTER LOUVERS AND FILIGREE

Optional brass or pewter louver kits may be installed in place of the factory installed black louvers. Refer to installation instructions provided with the brass or pewter louvers.

OPTIONAL TRIM

Optional trim kits can be used with unit when installed as a free standing fireplace with wood surround.

FIREBRICK

Optional firebrick kits can be installed. See installation instructions provided with kit.

OPTIONAL WIDE CANOPY

The optional wide canopy can be installed. See installation instructions provided with kit.

WARNING

Electrical connections should only be performed by a qualified, licensed electrician, main power must be off when connecting to main electrical power supply or performing service.

The blower when installed, must be electrically grounded in accordance with local codes or in the absence of local codes, with the National Electrical Code ANSI/NFPA 70.

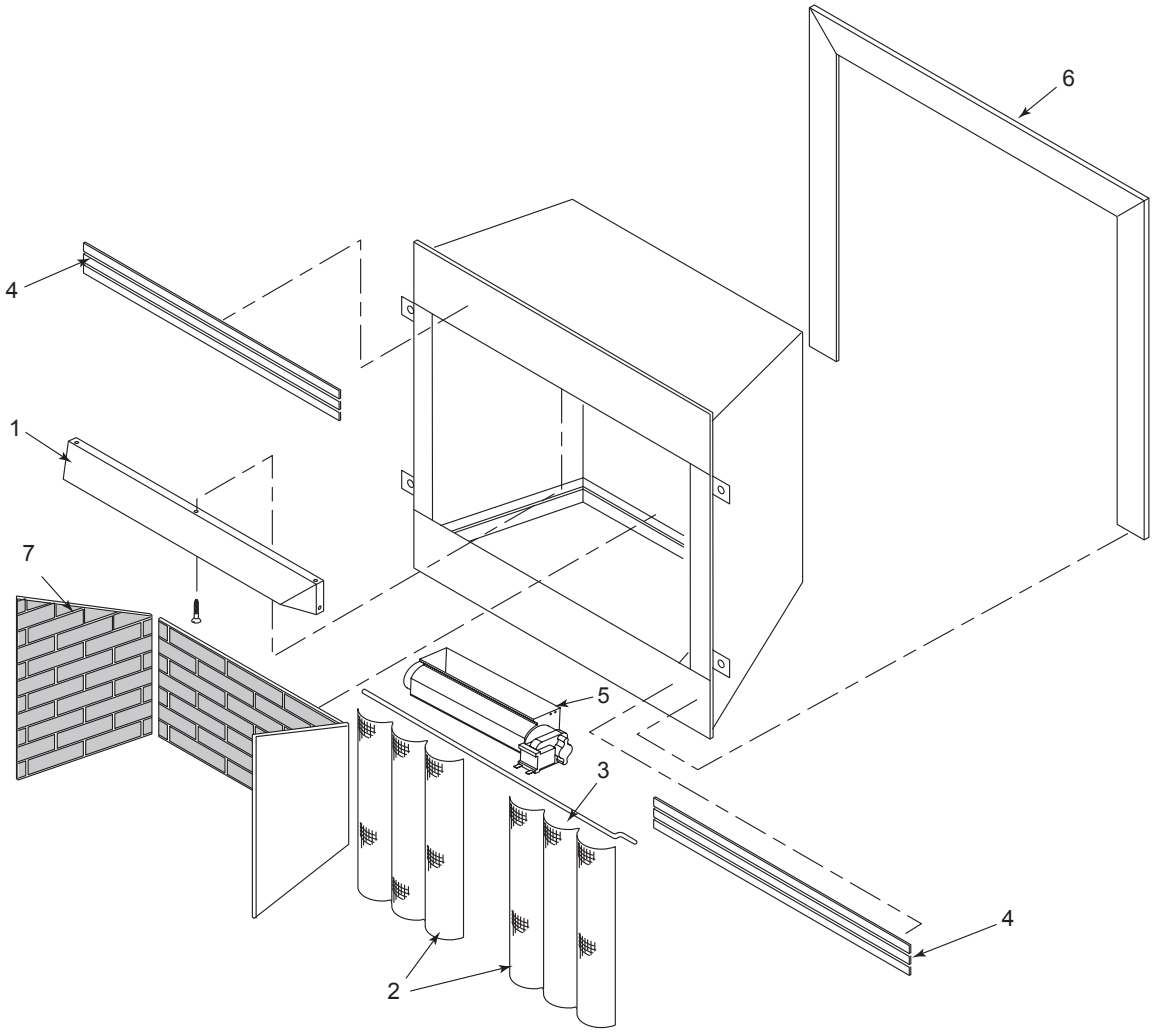

FIREBOX COMPONENTS

Ref.	Description	Qty.	VF/VFR32C	VF/VFR36C	VF/VFR42C
1.	Canopy	1	71D0023	71D0500	71D1000
2.	Screen Panel	2	61D0001	61D0001	61D0003
3.	Screen Rod	2	26D0138	26D0132	26D0133
4.	Black Louver	6	26D0695	26D0697	26D0699
Accessories in Kits					
1.	Standard Brass Canopy	1	BRCU32	BRCU36	BRCU42
1.	Wide Brass Canopy	1	BRC32	BRC36	BRC42
4.	Brass Louver	1	L32BR	L36BR	L42BR
4.	Pewter Louver	1	L32PW	L36PW	L36PW
5.	Blower w/Rheostat	1	BLOTMC	BLOTMC	BLOTMC
6.	Brass Trim Curved Design	1	BRTK32C	BRTK36C	BRTK42C
6.	Pewter Trim Curved Design	1	PWTK32C	PWTK36C	PWTK42C
6.	Black Trim Curved Design	1	BLTK32C	BLTK36C	BLTK42C
6.	Brass Trim Kit	1	BRMTK32C	BRMTK36C	BRMTK42C
6.	Pewter Trim Kit	1	PWMTK32C	PWMTK36C	PWMTK42C
6.	Black Trim Kit	1	BLMTK32C	BLMTK36C	BLMTK42C
7.	Firebrick - Tavern Brown	1	FB32TB	FB36TB	FB42TB
7.	Firebrick - Cottage Red	1	FB32CR	FB36CR	FB42CR
8.	Outside Air Kit	1	AK-4	AK-4	AK-4

LIMITED LIFETIME WARRANTY POLICY

The following components are warranted for life to the original owner, subject of proof of purchase: Firebox, Combustion Chamber, Heat Exchanger, Grate, and Stainless Steel Burners.

FIVE YEAR WARRANTY

The following components are warranted for 5 years to the original owner, subject of proof of purchase: Vent Free Ceramic Fiber Logs, Catalytic Filter and Aluminized Burners.

BASIC WARRANTY

MHSC warrants the components and materials in your gas appliance to be free from manufacturing and material defects for a period of two years from date of installation. After installation, if any of the components manufactured by MHSC in the appliance are found to be defective in materials or workmanship, MHSC will, at its option, replace or repair the defective components at no charge to the original owner. MHSC will also pay for reasonable labor costs incurred in replacing or repairing such components for a period of two years from the date of installation. Any products presented for warranty repair must be accompanied by a dated proof of purchase.

This Limited Lifetime Warranty will be void if the appliance is not installed by a qualified installer in accordance with the installation instructions. The Limited Lifetime Warranty will also be void if the appliance is not operated and maintained according to the operating instructions supplied with the appliance, and does not extend to (1) firebox/burner assembly damage by accident, neglect, misuse, abuse, alteration, negligence of others, including the installation thereof by unqualified installers, (2) the costs of removal, reinstallation or transportation of defective parts on the appliance, or (3) incidental or consequential damage. All service work must be performed by an authorized service representative.

This warranty is expressly in lieu of other warranties, express or implied, including the warranty of merchantability of fitness for purpose and of all other obligations or liabilities. MHSC does not assume for it any other obligations or liability in connection with the sale or use of the appliance. In states that do not allow limitations on how long an implied warranty lasts, or do not allow exclusion of indirect damage, those limitations of exclusions may not apply to you. You may also have additional rights not covered in this Limited Lifetime Warranty.

MHSC reserves the right to investigate any and all claims against the Limited Lifetime Warranty and decide upon method of settlement.

IF WARRANTY SERVICE IS NEEDED...

1. Contact your supplier. Make sure you have your warranty, your sales receipt and the model/serial number of your MHSC product.
2. DO NOT ATTEMPT TO DO ANY SERVICE WORK YOURSELF.

MHSC
149 Cleveland Drive • Paris, Kentucky 40361
www.mhsc.com