This Owner's Manual is provided and hosted by Appliance Factory Parts.

Appliance Factory Parts
Experts in BBQ, Humidifier, & Appliance Parts
1-800-955-7075

MAJESTIC VFR36C Owner's Manual

Shop genuine replacement parts for MAJESTIC VFR36C

Find Your MAJESTIC Fireplace Parts - Select From 585 Models

-------- Manual continues below --------

PRODUCT SPECIFICATIONS

VF36/VF(R)36C-R/VF(R)36C-TB Vent Free Firebox

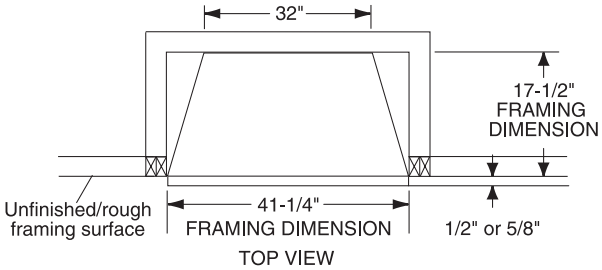

TOP VIEW

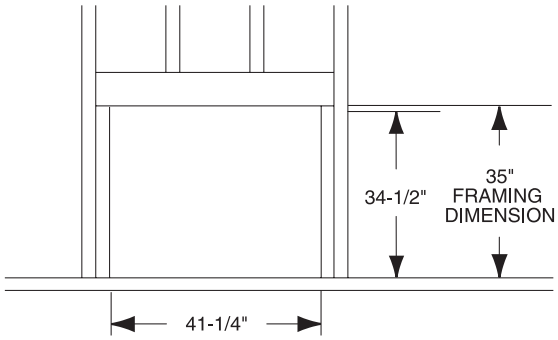

FRONT VIEW

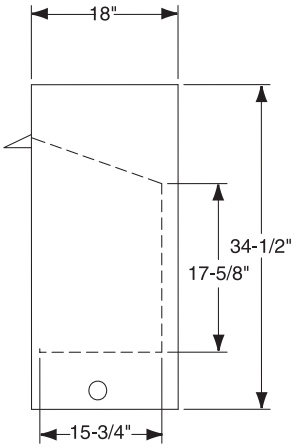

SIDE VIEW

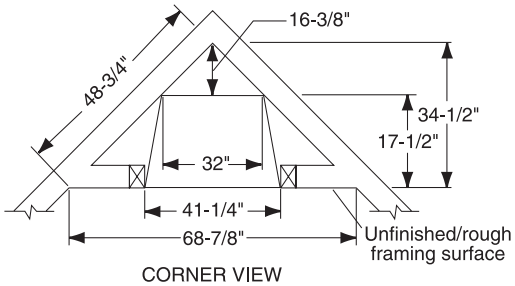

CORNER VIEW

MINIMUM HEARTH DIMENSIONS

Front opening width: 34"
Front opening height: 21-7/8"
Rear wall width: 27-3/8"
Firebox depth: 15-3/4"

TECHNICAL INFORMATION

Clearance to Fireplace: Zero
CSA Design Certified

FACTORY INSTALLED OPTIONS

Refractory firebrick (VF36C-R)
Tavern Brown firebrick (VF36C-TB)

FIELD INSTALLED ACCESSORIES

Louvers: Brass, Pewter
Curved Trim: Brass, Pewter, Black
Medium Trim: Brass, Pewter, Black
Variable Thermostat Controlled Forced Air Blower (160cfm) -BLOTMC
Brass Hood
Wide Profile Brass Hood
Radiant Panel Kits
Cottage Red firebrick
Wood Cabinet Surrounds and Hearths
Classic and Designer Facings

LIMITED LIFETIME WARRANTY

MADE IN U.S.A. · NFI ADVOCATE · HPBA Hearth, Patio & Barbecue Association · HPBAC Hearth, Patio & Barbecue Association of Canada PROTECT • PROMOTE • EDUCATE · AHRI MEMBER · NICE & WARM Vent Free Gas Heat

A Brand of Monessen Hearth Systems Co.
149 Cleveland Drive, Paris, Kentucky 40361
www.majesticproducts.com

MAJESTIC

To avoid personal injury or property damage, the product described by this brochure must be installed, operated and maintained in strict compliance with the instructions packaged with the product and all applicable building or fire codes. Contact local building or fire officials about restrictions and installation inspection requirements. All photographs and drawings on this brochure are for illustrative purposes only and are not intended for, nor should they be used as a substitute for the instructions packaged with the unit. Appearance and specifications of the product are subject to change without notice. 04/09