This Owner's Manual is provided and hosted by Appliance Factory Parts.

Appliance Factory Parts
Experts in BBQ, Humidifier, & Appliance Parts
1-800-955-7075

EMPIRE VFS32FB2EF-3 Owner's Manual

Shop genuine replacement parts for EMPIRE VFS32FB2EF-3

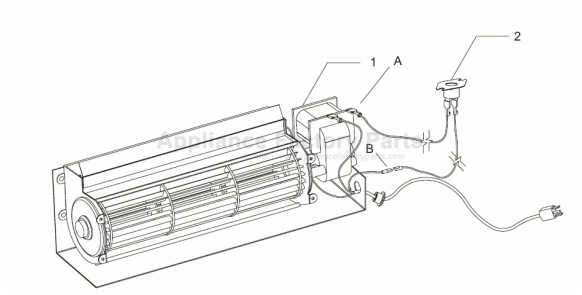

Find Your EMPIRE Fireplace Parts - Select From 642 Models

-------- Manual continues below --------

INSTALLATION INSTRUCTIONS AND OWNER'S MANUAL

EMPIRE COMFORT SYSTEMS

The Breckenridge Select Vent-Free Universal Fireboxes

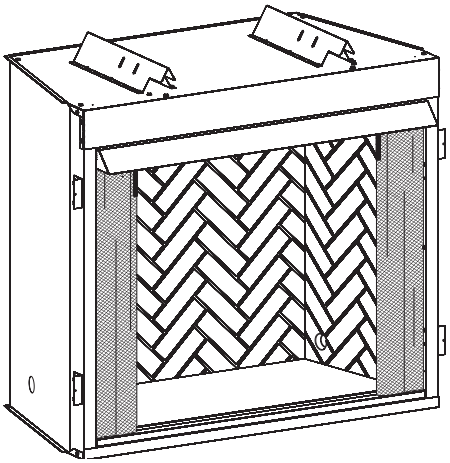

ANSI Z21.91 Ventless Fireplace Enclosures for Gas Fired Decorative Type Unvented Room Heaters

WARNING: If the information in these instructions are not followed exactly, a fire or explosion may result causing property damage, personal injury or loss of life.

— **Do not store or use gasoline or other flammable vapors and liquids in the vicinity of this or any other appliance.**

— **WHAT TO DO IF YOU SMELL GAS**
- **Do not try to light any appliance.**
- **Do not touch any electrical switch; do not use any phone in your building.**
- **Immediately call your gas supplier from a neighbor's phone. Follow the gas supplier's instructions.**
- **If you cannot reach your gas supplier, call the fire department.**

— **Installation and service must be performed by a qualified installer, service agency or the gas supplier.**

DO NOT ATTEMPT TO MODIFY OR ALTER THE CONSTRUCTION OF THE FIREBOX OR ITS COMPONENTS. ANY MODIFICATION OR ALTERATION OF CONSTRUCTION MAY VOID THE WARRANTY OF THIS FIREBOX.

CHILDREN AND ADULTS SHOULD BE ALERTED TO THE HAZARDS OF HIGH SURFACE TEMPERATURE AND SHOULD STAY AWAY TO AVOID BURNS OR CLOTHING IGNITION.

YOUNG CHILDREN SHOULD BE CAREFULLY SUPERVISED WHEN THEY ARE IN THE SAME ROOM AS THE FIREBOX.

UNIVERSAL FIREBOX FOR ALL VENT-FREE LOG SETS

MODELS

VFS32FB2DF-4	VFS36FB2DF-4	VFS42FB2DF-4
VFS32FB3DF-4	VFS36FB3DF-4	VFS42FB3DF-4
VFS32FB2EF-3	VFS36FB2EF-3	VFS42FB2EF-3
VFS32FB3EF-3	VFS36FB3EF-3	VFS42FB3EF-3

GAS-FIRED UL LISTED

NATIONAL FIREPLACE INSTITUTE® NFI CERTIFIED www.nficertified.org

We suggest that our gas hearth products be installed and serviced by professionals who are certified in the U.S. by the National Fireplace Institute® (NFI) as NFI Gas Specialists.

Installer: **Leave this manual with the appliance.**
Consumer: **Retain this manual for future reference.**

FOR USE ONLY WITH A LISTED GAS-FIRED UNVENTED DECORATIVE ROOM HEATER NOT TO EXCEED 40,000 BTU/H.

DO NOT BUILD A WOOD FIRE.

WARNING: Improper installation, adjustment, alteration, service or maintenance can cause injury or property damage. Refer to this manual. For assistance or additional information, consult a qualified installer, service agency or the gas supplier.

Carefully review the instructions supplied with the decorative type unvented room heater for the minimum fireplace size requirement.

DO NOT INSTALL A VENT-FREE LOG SET IN THIS FIREBOX, UNLESS THIS FIREBOX MEETS THE MINIMUM DIMENSIONS REQUIRED FOR THE INSTALLATION.

TABLE OF CONTENTS

SECTION	PAGE
Important Safety Information	3
Introduction	3
Clearances	4
Firebox Installation Instructions	5-7
Installing Hood	7-8
Gas Line Connection	8
Optional Single Speed Blower Installation Instructions	9-11
Junction Box Wiring Installation Instructions	12
Maintenance	12
Parts List	12-13
Parts View	14
Accessories	15-16
Master Parts Distributor List	17
How To Order Repair Parts	17
Service Notes	18-19

IMPORTANT SAFETY INFORMATION

The installation must conform with local codes or, in the absence of local codes, with the National Fuel Gas Code, ANSI Z223.1 (latest edition) and to the National electrical Code, ANSI/NFPA70 (latest edition).

NOTE: Installation and repair should be done by a qualified service person. The appliance should be inspected before use and at least annually by a qualified service person. More frequent cleaning may be required due to excessive lint from carpeting, bedding material, etc. It is imperative that control compartment, burners and circulating air passageways of the appliance be kept clean.

Any safety screen or guard removed for servicing an appliance must be replaced prior to operating the appliance. Provide adequate combustion and ventilation air.

The flow of combustion and ventilation air MUST NOT be obstructed.

Provide adequate clearance around air openings into the combustion chamber and adequate accessibility clearance for servicing and proper operation. NEVER obstruct the front opening of the appliance.

This Empire Comfort Systems, Inc. firebox and its components have been tested and will operate safely when installed in accordance with this installation manual. Read all instructions before starting installation, then follow these instructions carefully during installation to maximize firebox benefit and safety. Report to your dealer any parts damaged in shipment.

The Empire Comfort Systems, Inc. warranty will be voided by, and Empire Comfort Systems, Inc. disclaims any responsibility for the following actions:

- **Installation of any damaged firebox.**
- **Modification of the firebox or any of the components parts thereof.**
- **Installation other than as instructed by Empire Comfort Systems, Inc.**
- **Installation and/or use of any component part or accessory not approved by Empire Comfort Systems, Inc. in combination or assembly with a Empire Comfort Systems, Inc. firebox, not withstanding any independent testing laboratory or other third party approval of such component part or accessory.**

Any such action may create a possible fire hazard. Consult your local building codes.

Firebox Screen.
The firebox screen must be in place when the firebox is operating.

INTRODUCTION

Instructions to Installer

1. Installer must leave instruction manual with owner after installation.
2. Installer must have owner fill out and mail warranty card supplied with firebox.
3. Installer should show owner how to start and operate log set that is installed into firebox.

Important

All correspondence should refer to complete Model Number, Serial Number.

Notice: During initial firing of this firebox with a log set installed, its paint will bake out, and smoke will occur. To prevent triggering of smoke alarms, ventilate the room in which the unit is installed.

Qualified Installing Agency

Installation and replacement of gas piping, gas utilization equipment or accessories and repair and servicing of equipment shall be performed only by a qualified agency. The term "qualified agency" means any individual, firm, corporation or company which either in person or through a representative is engaged in and is responsible for (a) the installation or replacement of gas piping or (b) the connection, installation, repair or servicing of equipment, who is experienced in such work, familiar with all precautions required and has complied with all the requirements of the authority having jurisdiction.

State of Massachusetts: The installation must be made by a licensed plumber or gas fitter in the Commonwealth of Massachusetts. The state of Massachusetts requires that a flexible appliance connector cannot exceed three feet in length.

Sellers of unvented propane or natural gas-fired supplemental room heaters shall provide to each purchaser a copy of 527 CMR 30 upon sale of the unit.

In the State of Massachusetts, unvented propane and natural gas-fired space heaters shall be prohibited in bedrooms and bathrooms.

The installation must conform with local codes or, in the absence of local codes, with the National Fuel Gas Code, ANSI Z223.1/NFPA 54.*

*Available from the American National Standards Institute, Inc., 11 West 42nd St., New York, N.Y. 10036.

CLEARANCES

Sidewall Clearances: The clearance from the inside of the firebox to perpendicular combustible side wall should not be less than 6". **See Figure 1.**

Firebox Side and Back Clearances: The firebox outer casing side and back flanges are zero clearance to combustibles.

Top Framing and Finishing: Combustible framing may rest on top of standoffs. Combustible finishing materials may extend to the top standoff screws on the front edge of the outer wrap. **See Figure 2**.

Ceiling Clearances: The ceiling height should not be less than 42" from the top of the hood. **See Figures 3a and 3b.**

Mantel Clearances: Vent free firebox models must use the hood supplied with the firebox, or one of the optional hood kits available for each model. If a combustible mantel is installed, it must meet the clearance requirements detailed below.

Grate Clearance: The minimum clearance between the front legs of the grate and front edge of the firebox is 2".

Leave at least 36" clearance from the front of the firebox.

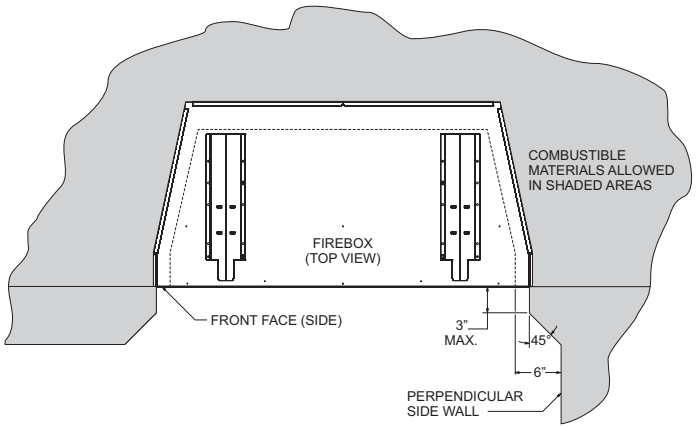

Figure 1

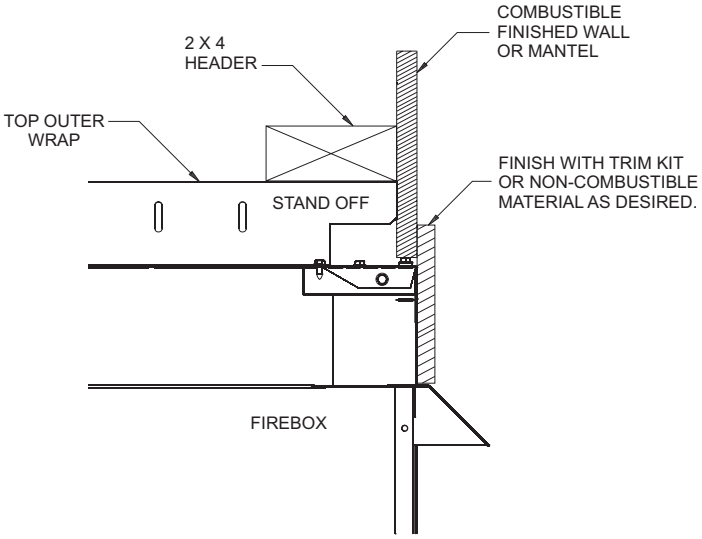

Figure 2

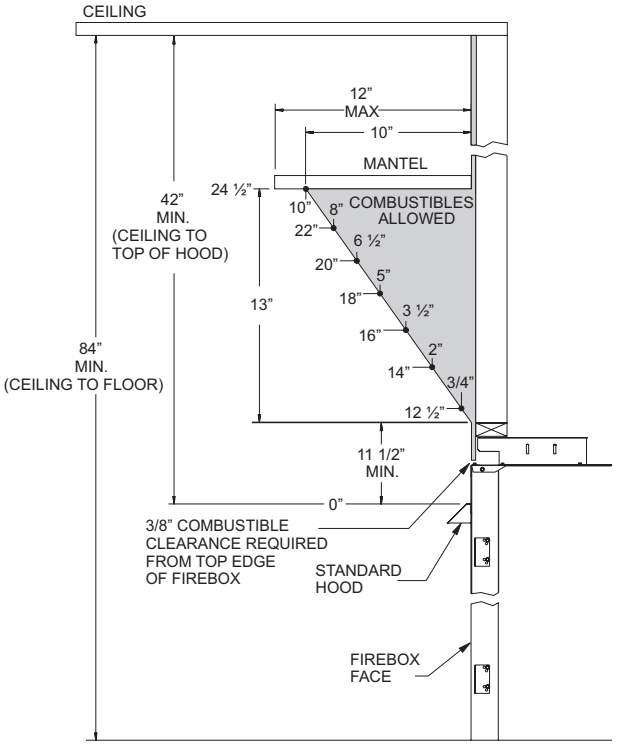

Figure 3a - Mantel Clearances with Standard Hood

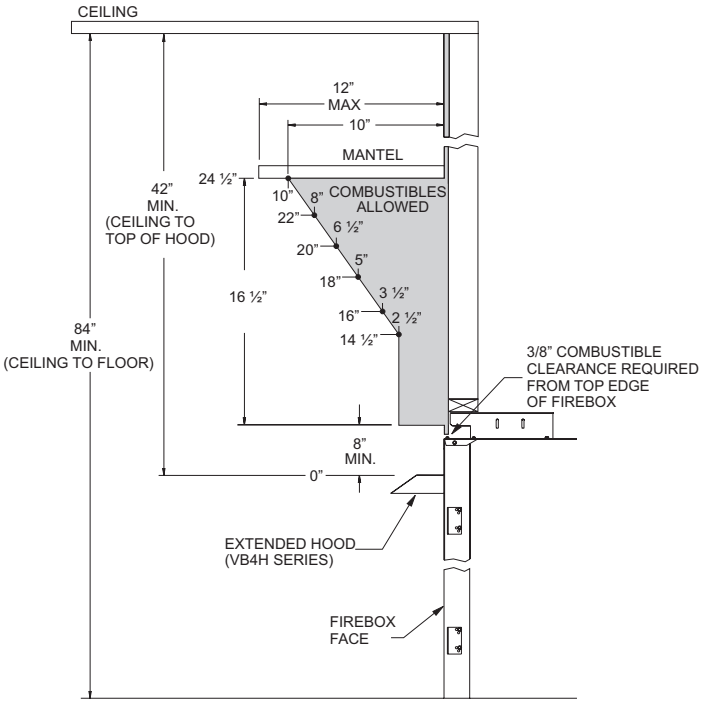

Figure 3b - Mantel Clearances with Optional Extended Hood

FIREBOX INSTALLATION INSTRUCTIONS

Any vent-free Gas Log Heater must be “For use with approved ANSI Z21.11.2 unvented room heater.”

Follow and complete the installation instructions of the gas log set and the requirements of this firebox.

Check all fittings for leaks before lighting the gas log set.

In planning the installation for the firebox, it is necessary to determine where the unit is to be installed and whether optional accessories are desired. Gas supply piping should also be planned at this time.

A gas shut off must be in this line.

The firebox can be mounted on any of these surfaces:

1. A flat hard combustible or non-combustible surface.
2. A raised platform of combustible or non-combustible material.
3. Recessed into the floor as illustrated by **Figure 4**.
4. Supported under all (4) corners of the firebox so that contact is made on all four perimeter edges on the bottom of the unit (Example: Four (4) concrete masonry blocks).

If the firebox is installed directly on carpeting, tile or other combustible material other than wood flooring, it should be installed on a metal or wood panel extending the full width and depth of the unit.

At this point, you should have decided what components to include in your installation, and where the firebox is to be located. If this has not been done, stop and consult your dealer for assistance with this planning.

Planning Your Installation

Accessory kits such as the FBB5 Blower kit, Trim kits, Mantles, Full Cabinet Mantels, plus other Decorative Frame, Hood, and Door accessory kits may be installed after the firebox is secured to the framed opening.

Refer to the instructions provided with each of the optional accessory kits for proper installation and operation.

Firebox Framing

Firebox framing can be built before or after the firebox is set in place. Framing should be positioned to accommodate wall covering and firebox facing material. The firebox framing should be constructed of 2 x 4 lumber or heavier. The framing headers may rest on the top of the firebox standoffs. Refer to **Figures 5 and 6** for firebox framing dimensions.

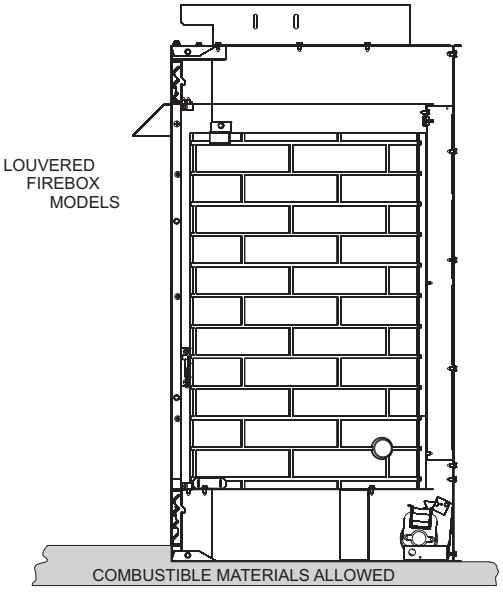

Figure 4

Select Vent-Free Firebox Framing Dimensions (in inches)

	"A"	"B"	"C"
Model	Framing Height	Framing Width	Framing Depth
VFS32FB	41 1/2"	35"	23"
VFS36FB	41 1/2"	40"	23"
VFS42FB	41 1/2"	44"	23"

Attention: Add 3-3/4" to "A" Dimension when using flush mantel base.

Framing dimension A includes a three inch clearance for standoffs on firebox.

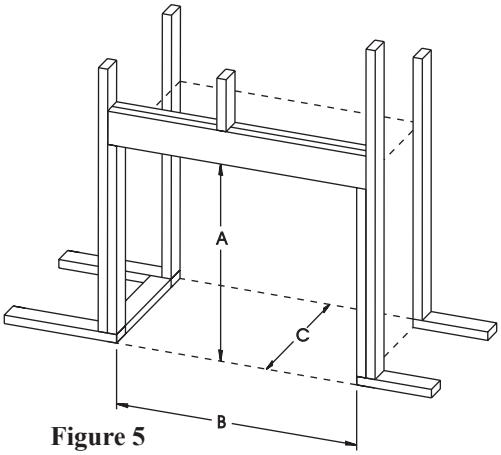

Figure 5

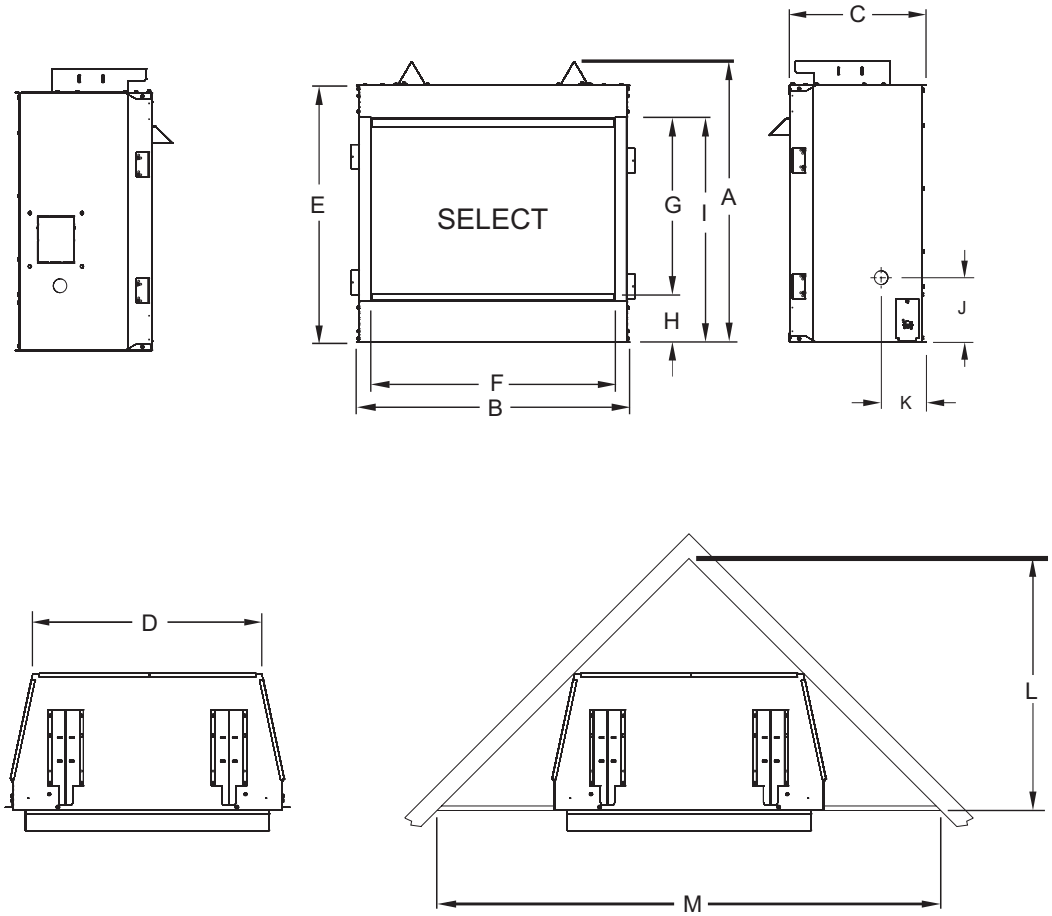

SELECT			
REFERENCE LETTER	FLUSH		
	VFS32	VFS36	VFS42
A	41 1/8"	41 1/8"	41 1/8"
B	34 1/2"	39 1/2"	43 1/2"
C	23 7/16"	23 7/16"	23 7/16"
D	26 3/8"	31 3/8"	35 3/8"
E	38 1/2"	38 1/2"	38 1/2"
F	31"	36"	40"
G	31 3/4"	31 3/4"	31 3/4"
H	2 1/8"	2 1/8"	2 1/8"
I	34"	34"	34"
J	4 1/4"	4 1/4"	4 1/4"
K	7 5/8"	7 5/8"	7 5/8"
L	36 1/2"	39 1/16"	41 1/16"
M	73 1/16"	78 1/16"	82 1/16"

Figure 6
Firebox Dimensions

FIREBOX INSTALLATION INSTRUCTIONS (continued)

Locating Firebox

Place firebox in framing opening. Use the four (4) framing brackets provided on the firebox to attach firebox to framing. Different hole locations can be used for finishing materials with thicknesses of 3/8", 1/2" and 3/4". Attach these materials with screws provided, two (2) per framing bracket. **See Figure 7.**

Framing brackets should fit directly against framing material. Use at least one (1) nail per bracket to secure in place.

Check squareness of the firebox prior to securing to framed opening. **See Figure 8.**

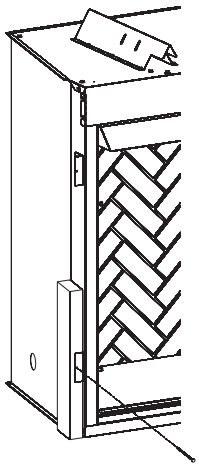

Figure 7

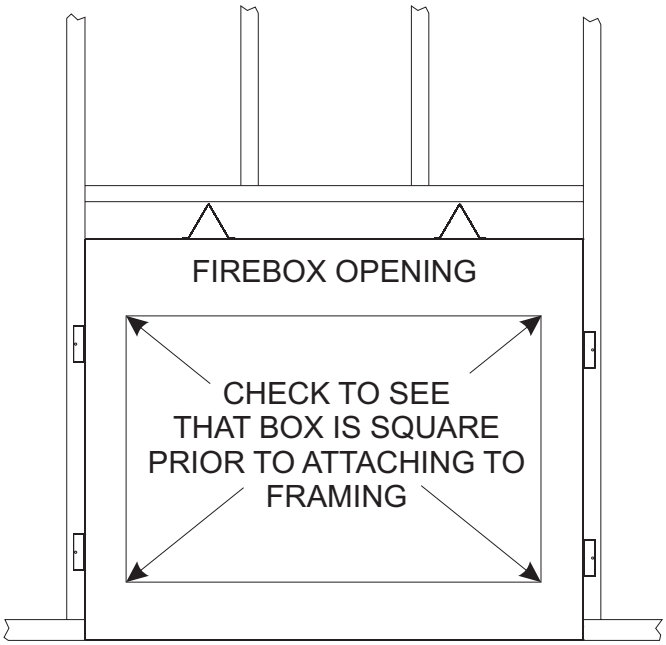

Figure 8

INSTALLING HOOD

A black hood that is furnished with each firebox (or optional hood) MUST be installed before the firebox is used. Failure to do so may create a possible fire hazard. The hood is located inside the firebox on flush face units. If brass, stainless steel, or hammered pewter hoods are desired, they can be purchased as an option. Attachment is the same as the standard black hood.

Flush Face Models

1. On flush face models, loosen the two screws (A) holding firebox top to face panel, then slide the hood flange between the firebox top and face panel and re-tighten the screws.
2. Install one (1) screw at each end of the hood as shown (C).

Flush Face Models

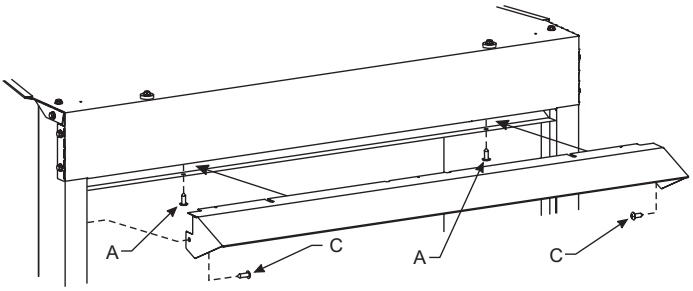

Figure 9

INSTALLING HOOD (continued)

Extended Hoods

If your non-combustible facing material is over 1" in thickness that will be used to finish this firebox, an extended hood is available that will extend out 2" farther out into the room. Contact your local dealer for details.

VB4H32BL	Standard Black
VB4H32BR	Polished Brass
VB4H32SS	Stainless Steel
VB4H32HP	Hammered Pewter

VB4H36BL	Standard Black
VB4H36BR	Polished Brass
VB4H36SS	Stainless Steel
VB4H36HP	Hammered Pewter

VB4H42BL	Standard Black
VB4H42BR	Polished Brass
VB4H42SS	Stainless Steel
VB4H42HP	Hammered Pewter

Finishing

All joints (top, bottom and sides), where the wall or decorative facing material meets the firebox surround should be sealed with a non-combustible material.

Hearth extensions are recommended, but not required for these fireboxes.

GAS LINE CONNECTION

The firebox is designed to accept a 3/8-inch gas line for an approved vent-free gas logset. Have the line installed by a qualified service person in accordance with all building codes. Consult local building codes to properly size the gas supply line leading to the 3/8-inch hook-up at the unit. The state of Massachusetts requires that a flexible appliance connector cannot exceed three feet in length.

Gas access holes are provided on both sides of the firebox. **See Figure 10**. Carefully remove the indented knockout in the ceramic brick panel using a drill or utility knife. **See Figure 11.**

Check gas type. Use only the gas type indicated on the gas log set rating plate. If the gas listed on the plate is not your type of gas supply, DO NOT INSTALL. Contact your dealer for proper model.

Always use an external regulator for all LP fireboxes to reduce the supply tank pressure to a maximum of 14" w.c. This is in addition to the regulator fitted to the log set.

WARNING: CONNECTION DIRECTLY TO AN UNREGULATED L.P. TANK CAN CAUSE EXPLOSION.

Install only a ANSI Z21.11.2 vent-free log set into this firebox.

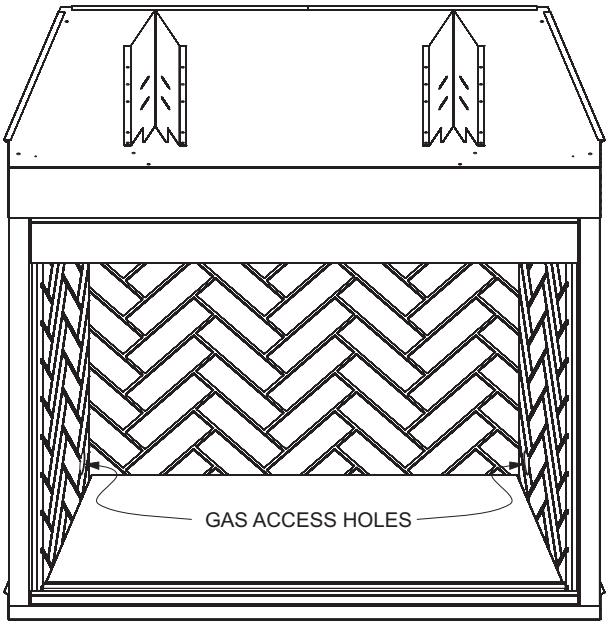

Figure 10

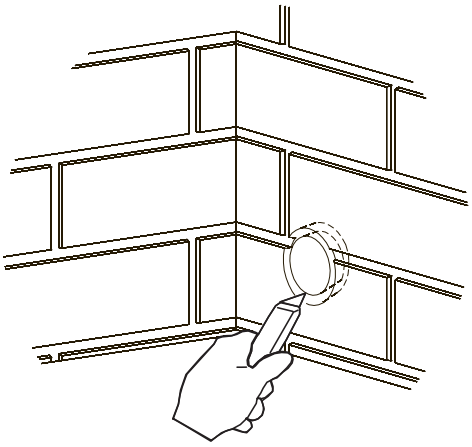

Figure 11

OPTIONAL SINGLE SPEED BLOWER INSTALLATION INSTRUCTIONS

Attention: Install blower assembly before connecting gas inlet supply line.

Wiring

The appliance, when installed, must be electrically grounded in accordance with local codes or, in the absence of local codes, with the *National Electrical Code, ANSI/NFPA 70*, if an external electrical source is utilized. **This appliance is equipped with a three-prong [grounding] plug for your protection against shock hazard and should be plugged directly into a properly grounded three-prong receptacle. Do not cut or remove the grounding prong from this plug.** For an ungrounded receptacle, an adapter, which has two prongs and a wire for grounding, can be purchased, plugged into the ungrounded receptacle and its wire connected to the receptacle mounting screw. With this wire completing the ground, the appliance cord plug can be plugged into the adapter and be electrically grounded.

Caution: Label all wires prior to disconnection when servicing controls. Wiring errors can cause improper and dangerous operation. Verify proper operation after servicing.

Note: Junction box on right side of firebox must be pre-wired at time of firebox installation for use with blower assembly. A standard wall ON/OFF wall switch or optional SCV1 Variable Speed Control Kit should be installed to activate power to the Firebox, and control the operation of the FBB5 Blower assembly. It is recommended that installation of the wiring be performed by a qualified electrician. **See Figure 12.**

1. If installed, turn OFF gas supply to firebox/gas log.
2. If applicable, turn OFF electric supply to firebox.
   CAUTION: ALL WIRING SHOULD BE DONE BY A QUALIFIED ELECTRICIAN AND SHALL BE IN COMPLIANCE WITH ALL LOCAL, CITY AND STATE BUILDING CODES. BEFORE MAKING THE ELECTRICAL CONNECTION, MAKE SURE THAT MAIN POWER SUPPLY IS DISCONNECTED. THE APPLIANCE, WHEN INSTALLED, MUST BE ELECTRICALLY GROUNDED IN ACCORDANCE WITH LOCAL CODES, WITH THE NATIONAL ELECTRICAL CODE ANSI/NFPA 70 (LATEST EDITION).

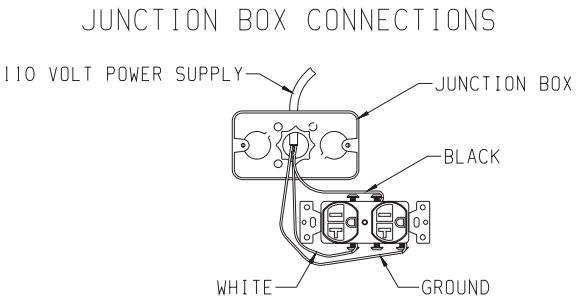

Figure 12

A factory installed junction box is located on the lower right side of the firebox. Wiring must be fed to the junction box and attached to the receptacle that is provided. From right side of the firebox, remove the screw securing the junction box assembly. Leave approximately 6” of wire in the junction box for connection.

Attach black wire to one side of the receptacle and white wire to opposite side of receptacle. The ground wire should be attached to the green (ground) screw.

Install the receptacle into the junction box. Attach cover plate.

Attention: If installed, do not damage gas inlet supply line when blower assembly is inserted into firebox. In some cases, removal the gas inlet supply line may be necessary.

Select Firebox Models

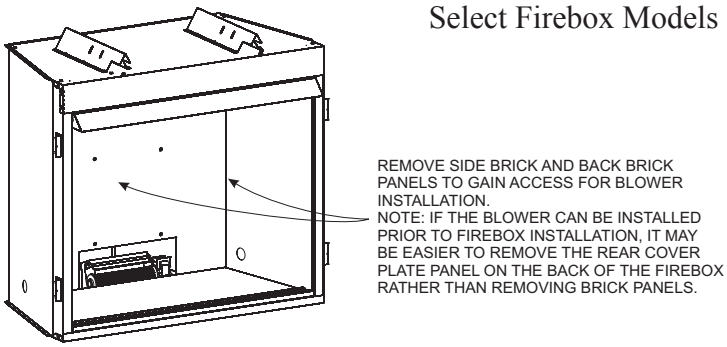

Figure 13

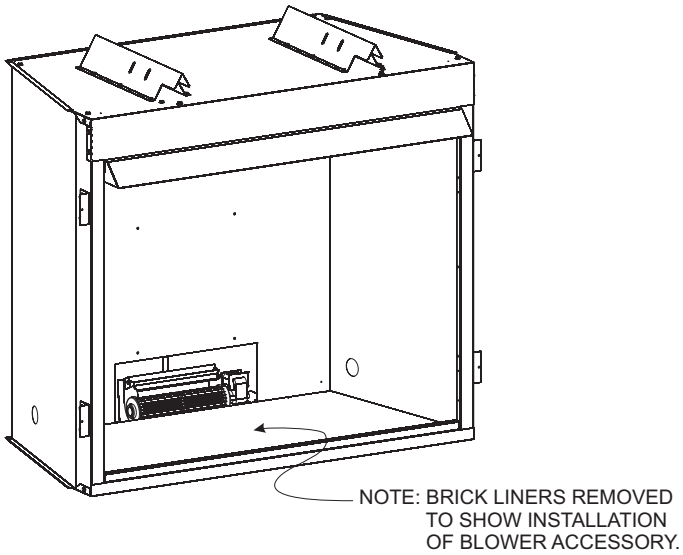

Figure 14

4. Insert blower assembly into interior, bottom of firebox. Position blower assembly so that you align the notch on back of blower assembly with the center screw on firebox back, then push the blower assembly against firebox back. The blower wheel must be centered with the back wall of the firebox. The magnets on the back and bottom of blower assembly will sufficiently hold blower assembly in place.

Note: For field installation of blower assembly, it may be easier to remove rear cover panel to install blower. This eliminates the need to remove brick liner panels, but the blower would have to be installed prior to installing the firebox into a wall or chase. **See Figure 15.**

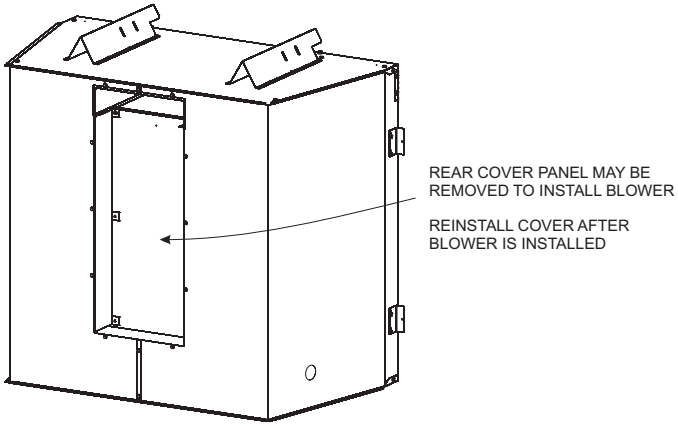

Figure 15

5. Once the blower assembly is in position, locate the plug button in the top right rear corner of the firebox. Remove the plug with a standard screwdriver and discard plug.
6. Next, find the fan control switch and wire assembly. Feed the wires through the hole at the top of the firebox, and secure the fan control switch with (2) #6 screws provided. **See Figure 16.**

NOTE: HOOD AND BRICK PANELS REMOVED FOR CLARITY

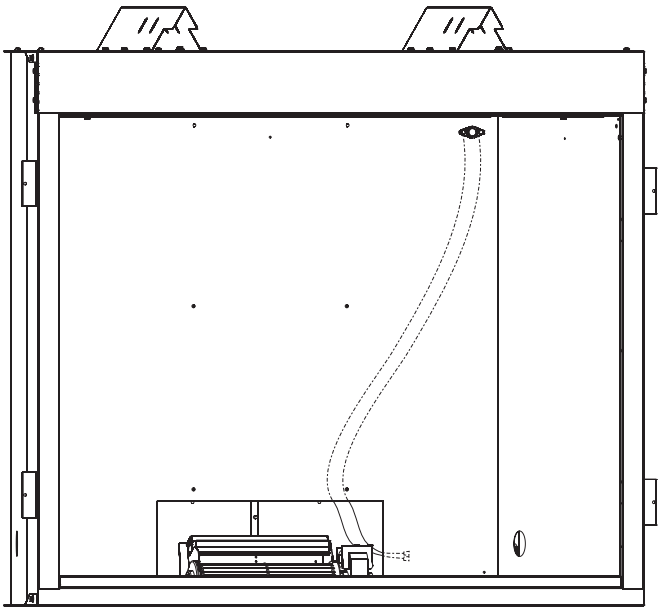

Figure 16

7. The fan control wires will slide down between the firebox and outer wrap near the blower assembly. **See Figure 16**.
8. One fan control wire will have a 1/4” female terminal that must be attached to the open terminal on the blower motor. **See Figure 19, Connection A.**
9. The other fan control wire has a 1/4” male terminal. Attach this terminal to the open terminal on the blower power cord. **See Figure 19, Connection B**
10. Route the wires away from moving parts of the blower assembly and retain wires together near the blower motor using the plastic purse clip provided.
11. To complete the installation, plug the power cord into the junction box receptacle at the right rear corner of the firebox outer wrap. **See Figure 17.**
12. If room permits, the power cord can be located from the outside of the unit looking through the junction box access hole (with the junction box removed), then plug up the power cord before reinstalling the pre-wired junction box.
13. Once all connections are made electrically, it is recommended that you test the blower fan control operation by turning on power to the blower (Caution: 110 Volt). Then apply heat to the fan control switch inside the firebox with a lighter or match until blower is activated. Once blower is activated, check for proper operation. Do not place hands near blower assembly or other wiring while power is on.
14. Replace blower access plate and/or reinstall the brick liner panels if provided.
15. This completes the installation of the optional FBB5 Blower kit accessory.

Note: This blower is equipped with a heat activated fan control switch. Blower will operate when the firebox warms up, and will turn off automatically when the firebox cools down.

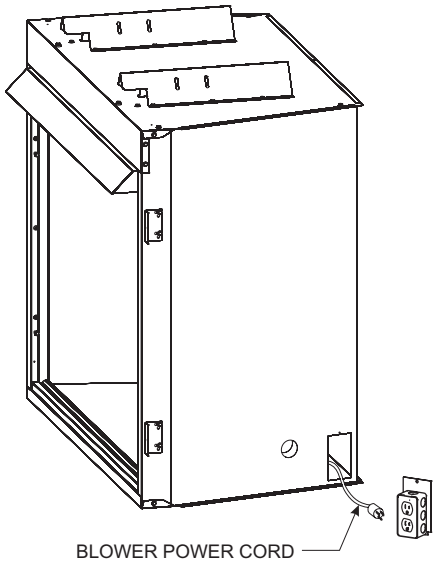

Figure 17

Blower Motor
The blower motor does not have oiling holes. Do not attempt to oil the blower motor.

Blower Wheels
The blower wheels will collect lint and could require periodic cleaning. If the air output decreases or the noise level increases, it indicates a dirty blower wheel. Remove fan and clean blower wheels.

> **Warning:** Unplugging of blower accessory will not stop the heater from cycling. To turn off gas to the heater (millivolt model): push in gas control knob slightly and turn clockwise to "OFF." Do not force. To turn off gas on direct ignition model, turn gas line valve to "OFF."

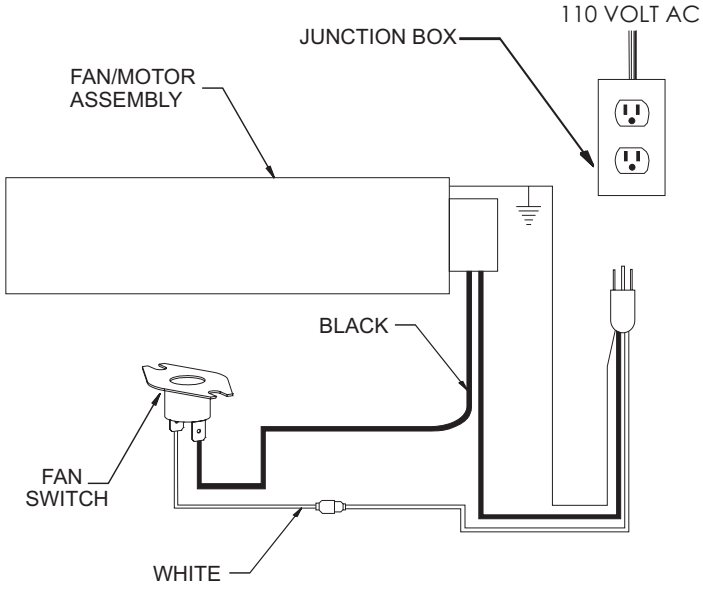

Figure 18

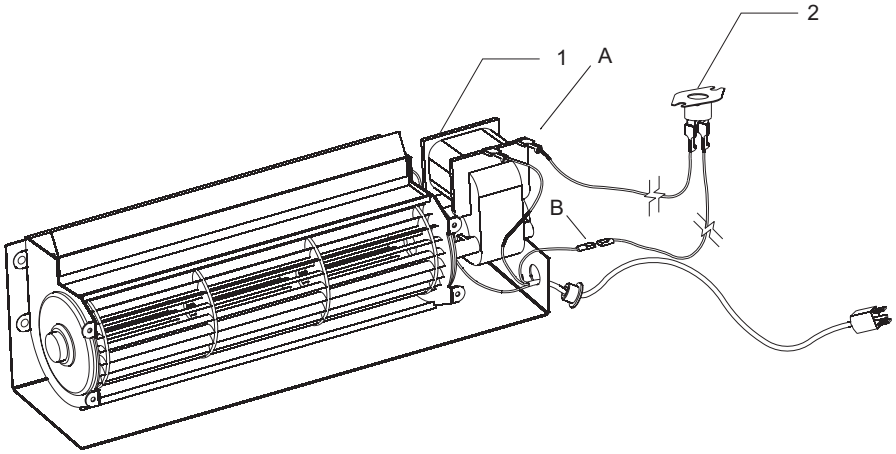

1	FBB5	BLOWER ASSEMBLY COMPLETE
2	R9901	FAN CONTROL SWITCH

Figure 19

JUNCTION BOX WIRING INSTALLATION INSTRUCTIONS

CAUTION: ALL WIRING SHOULD BE DONE BY A QUALIFIED ELECTRICIAN AND SHALL BE IN COMPLIANCE WITH ALL LOCAL, CITY AND STATE BUILDING CODES. BEFORE MAKING THE ELECTRICAL CONNECTION, MAKE SURE THAT MAIN POWER SUPPLY IS DISCONNECTED. THE APPLIANCE, WHEN INSTALLED, MUST BE ELECTRICALLY GROUNDED IN ACCORDANCE WITH LOCAL CODES OR, IN THE ABSENCE OF LOCAL CODES, WITH THE NATIONAL ELECTRICAL CODE ANSI/NFPA 70 (LATEST EDITION)

A factory installed junction box is located on the lower right hand side of the firebox. Wiring must be fed to the junction box and attached to the receptacle that is provided. Remove the knockout in the installed junction box to accept wiring into the junction box. Install a UL listed cable clamp (not supplied) in the knockout hole. Leave approximately 6" of wire in the junction box for connection.

Attach black wire to one side of the receptacle and white wire to opposite side of receptacle. The ground wire should be attached to the green (neutral) screw.

Install the receptacle into the junction box. Attach cover plate.

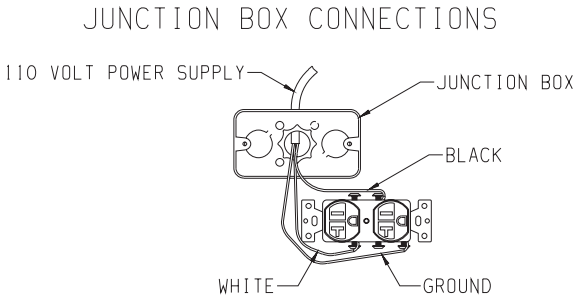

Figure 20

MAINTENANCE

Keep the control compartment, logs and burner area surrounding the logs clean by vacuuming or brushing area at least twice a year.

THE LOGS CAN GET VERY HOT – HANDLE ONLY WHEN COOL.

Always turn off gas to the pilot before cleaning. For relighting, refer to lighting instructions located on the log set.

Never obstruct the flow of the combustion and ventilation air. Keep the front of the firebox clear of all obstacles and materials.

Screens must be closed during operation.

PARTS LIST

INDEX NO.	PART NUMBER.				DESCRIPTION
	VFS32FB2DF	VFS32FB3DF	VFS32FB2EF	VFS32FB3EF	
1	17247	17247	17247	17247	TOP STANDOFF
2	10554	10554	10554	10554	FRAMING BRACKET
3	17162	17162	17162	17162	JUNCTION BOX ASSEMBLY
4	R3492	R3492	R3492	R3492	Receptacle
5	R3491	R3491	R3491	R3491	COVER, JUNCTION BOX
6	19945	19945	19945	19945	BRACKET, TOP BRICK RETAINER
7	R8667	R8667	R9422	R9422	BRICK PANEL RIGHT
8					BRICK PANEL BACK
9					BRICK PANEL LEFT
10	20020	20020	20020	20020	HOOD
11	R7051	R7051	R7051	R7051	ROD, SCREEN
12	R8213	R8213	R8213	R8213	SCREEN CURTAIN
13	19401	19401	19401	19401	BRACKET, BOTTOM BRICK RETAINER
14	R9292	R9292	R9292	R9292	HEARTH LEDGE, RIGHT
15	R9293	R9293	R9293	R9293	HEARTH LEDGE, LEFT
16	R9294	R9294	R9294	R9294	HEARTH LEDGE, CENTER
17	23004	23004	23004	23004	RETAINER, HEARTH LEDGE

PARTS LIST

INDEX NO.	VFS36FB2DF	VFS36FB3DF	VFS36FB2EF	VFS36FB3EF	DESCRIPTION
1	17247	17247	17247	17247	TOP STANDOFF
2	10554	10554	10554	10554	FRAMING BRACKET
3	17162	17162	17162	17162	JUNCTION BOX ASSEMBLY
4	R3492	R3492	R3492	R3492	Receptacle
5	R3491	R3491	R3491	R3491	COVER, JUNCTION BOX
6	19945	19945	19945	19945	BRACKET, TOP BRICK RETAINER
7	R8670	R8670	R9423	R9423	BRICK PANEL RIGHT
8					BRICK PANEL BACK
9					BRICK PANEL LEFT
10	20145	20145	20145	20145	HOOD
11	R7052	R7052	R7052	R7052	ROD, SCREEN
12	R8202	R8202	R8202	R8202	SCREEN CURTAIN
13	19401	19401	19401	19401	BRACKET, BOTTOM BRICK RETAINER
14	R9292	R9292	R9292	R9292	HEARTH LEDGE, RIGHT
15	R9293	R9293	R9293	R9293	HEARTH LEDGE, LEFT
16	R9295	R9295	R9295	R9295	HEARTH LEDGE, CENTER
17	23004	23004	23004	23004	RETAINER, HEARTH LEDGE
ITEM	**VFS42FB2DF**	**VFS42FB3DF**	**VFS42FB2EF**	**VFS42FB3EF**	**DESCRIPTION**
1	17247	17247	17247	17247	TOP STANDOFF
2	10554	10554	10554	10554	FRAMING BRACKET
3	17162	17162	17162	17162	JUNCTION BOX ASSEMBLY
4	R3492	R3492	R3492	R3492	Receptacle
5	R3491	R3491	R3491	R3491	COVER, JUNCTION BOX
6	19945	19945	19945	19945	BRACKET, TOP BRICK RETAINER
7	R8673	R8673	R9424	R9424	BRICK PANEL RIGHT
8					BRICK PANEL BACK
9					BRICK PANEL LEFT
10	19984	19984	19984	19984	HOOD
11	R7053	R7053	R7053	R7053	ROD, SCREEN
12	R8202	R8202	R8202	R8202	SCREEN CURTAIN
13	19401	19401	19401	19401	BRACKET, BOTTOM BRICK RETAINER
14	R9292	R9292	R9292	R9292	HEARTH LEDGE, RIGHT
15	R9293	R9293	R9293	R9293	HEARTH LEDGE, LEFT
16	R9296	R9296	R9296	R9296	HEARTH LEDGE, CENTER
17	23004	23004	23004	23004	RETAINER, HEARTH LEDGE

PARTS VIEW

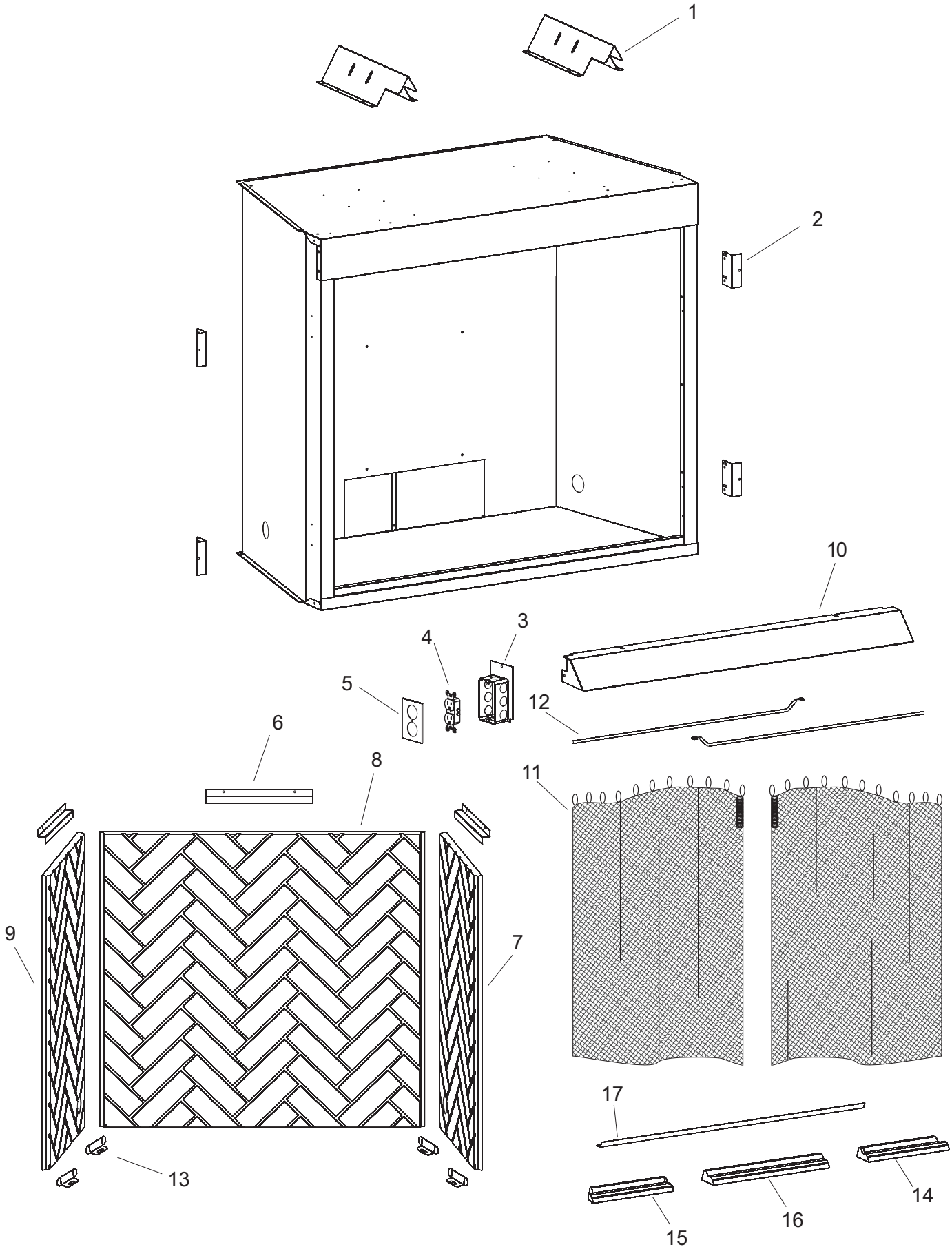

ACCESSORIES

Accessory	Description	Model Numbers
Fan Kit	Designed to provide forced air flow.	FBB5
Variable Speed Control Kit	Wall mounted variable speed control for use with FBB5 blower	SCV-1
Frame Kits	Standard 3-Piece Frame Kits Black, Brass, Stainless Steel, or Hammered Pewter Extruded Aluminum Frame Kits Black, Brass, Stainless Steel, or Hammered Pewter	Contact dealer for all available optional frame kits
Standard Hood	Brass hood = BR Stainless Steel = SS Hammered Pewter = HP	Contact dealer for all available optional hood accessories

ACCESSORIES (continued)

Extended 4" Hoods 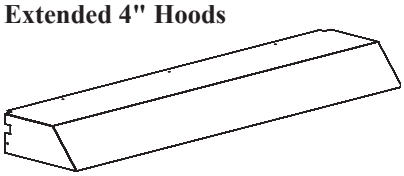	Extended hoods that extend out 2" farther than the standard hoods, to accommodate thicker surround materials. Available as optional kits in Black, Brass, Hammered Pewter, and Stainless Steel finishes.	Contact dealer for all available optional hood accessories
Decorative Door Kits	Available as optional kits in Black, Brass, Hammered Pewter, and Stainless Steel finishes.	Contact dealer for all available optional frame kit accessories
Decorative Frame Kits	Available as optional kits in Black, Brass, Hammered Pewter, and Stainless Steel finishes.	Contact dealer for all available optional decorative door kit accessories

MASTER PARTS DISTRIBUTOR LIST

To Order Parts Under Warranty, please contact your local Empire dealer. See the dealer locator at www.empirecomfort.com. To provide warranty service, your dealer will need your name and address, purchase date and serial number, and the nature of the problem with the unit.

To Order Parts After the Warranty Period, please contact your dealer or one of the Master Parts Distributors listed below. This list changes from time to time. For the current list, please click on the Master Parts button at www.empirecomfort.com.

Please note: Master Parts Distributors are independent businesses that stock the most commonly ordered Original Equipment repair parts for Heaters, Grills, and Fireplaces manufactured by Empire Comfort Systems Inc.

Star-Fire Distributors
1355 Evans Avenue
Akron, OH 44305

Phone: 330-630-2794
Toll Free: 800-875-6220
Fax: 330-633-8701
Parts: Heater & Hearth and Grills

Dey Distributing
1401 Willow Lake Boulevard
Vadnais Heights, MN 55101

Phone: 651-490-9191
Toll Free: 800-397-1339
Website: www.deydistributing.com
Parts: Heater & Hearth

East Coast Energy Products
10 East Route 36
West Long Branch, NJ 07764

Phone: 732-870-8809
Toll Free: 800-755-8809
Fax: 732-870-8811
Website: www.eastcoastenergy.com
Parts: Heater & Hearth and Grills

Victor Division of F. W. Webb Company
200 Locust Street
Hartford, CT 06114

Phone: 860-722-2433
Toll Free: 800-243-9360
Fax: 860-293-0479
Toll Free Fax: 800-274-2004
Websites: www.fwwebb.com & www.victormfg.com
Parts: Heater & Hearth and Grills

HOW TO ORDER REPAIR PARTS

Parts Not Under Warranty

Parts can be ordered through your Service Person, Dealer, or a Master Parts Distributor. See this page for the Master Parts Distributors list. For best results, the **service person or dealer** should order parts through the distributor. Parts can be shipped directly to the **service person/dealer**.

Warranty Parts

Warranty parts will need a proof of purchase and can be ordered by your Service Person or Dealer. Proof of purchase is **required** for warranty parts.

All parts listed in the Parts List have a Part Number. When ordering parts, first obtain the Model Number and Serial Number from the name plate on your equipment. Then determine the Part Number (**not** the Index Number) and the Description of each part from the following illustration and part list. Be sure to give all this information . . .

Appliance Model Number _____ Part Description _____

Appliance Serial Number _____ Part Number _____

Type of Gas (Propane or Natural) _____

Do not order bolts, screws, washers or nuts. They are standard hardware items and can be purchased at any local hardware store.

Shipments contingent upon strikes, fires and all causes beyond our control.

SERVICE NOTES

SERVICE NOTES

Empire Comfort Systems Inc.
918 Freeburg Ave. Belleville, IL 62220

If you have a general question about our products, please e-mail us at info@empirecomfort.com.
If you have a service or repair question, please contact your dealer.

www.empirecomfort.com